GENERAL PROJECT NOTES

1. THE USE OF THESE DOCUMENTS IS RESTRICTED TO THE ORIGINAL SITE FOR WHICH THEY ARE PREPARED. REUSE OR REPRODUCTION OF THE DOCUMENTS, (WHOLE OR IN PART) FOR ANY OTHER PURPOSE IS PROHIBITED. BRINKER RESTAURANT, INC. RETAINS ALL RIGHTS OF OWNERSHIP FOR THESE DOCUMENTS.
2. THE GENERAL CONDITIONS AS SET FORTH BY BRINKER RESTAURANT, INC. SHALL APPLY TO THE PROJECT.
3. THE CONTRACTOR AND SUB-CONTRACTORS SHALL BE SOLELY RESPONSIBLE FOR COMPLYING WITH ALL FEDERAL, STATE, AND LOCAL SAFETY REQUIREMENTS TOGETHER WITH EXERCISING PRECAUTIONS AT ALL TIMES FOR THE PROTECTION OF PERSONS INCLUDING EMPLOYEES AND PROPERTY. IT IS THE SOLE RESPONSIBILITY OF THE CONTRACTOR AND SUB-CONTRACTORS TO INITIATE, MAINTAIN AND SUPERVISE ALL SAFETY REQUIREMENTS, PRECAUTIONS, AND PROGRAMS IN CONNECTION WITH THE WORK.
4. THE GENERAL CONTRACTOR SHALL BE RESPONSIBLE TO COORDINATE ALL WORK AND FOR THE MEANS,
5. METHODS, PROCEDURES, TECHNIQUES, AND SEQUENCES OF CONSTRUCTION.
   THE GENERAL CONTRACTOR SHALL BE RESPONSIBLE FOR THE SCHEDULING AND THE EXPENSE OF ON-SITE TESTING AND INSPECTION SERVICES AS LISTED IN THE SPECIFICATIONS AND GENERAL CONDITIONS.
6. WHEN CONTRACTOR ACCEPTS DELIVERY OF ALL ITEMS NOTED ON PLANS EITHER IN CONTRACT OR NOT IN CONTRACT HE SHALL BE RESPONSIBLE FOR LOSS AND/OR DAMAGE TO THESE ITEMS.
7. THE GENERAL CONTRACTOR SHALL HAVE A JOB PHONE ON THE PREMISES DURING ENTIRE CONSTRUCTION PERIOD.
8. THE GENERAL CONTRACTOR IS TO HAVE A FULL TIME QUALIFIED SUPERVISOR ON THE SITE AT ALL TIMES WHILE WORK IS BEING PERFORMED.
9. THE GENERAL CONTRACTOR IS TO VERIFY ALL DIMENSIONS AND EXISTING FIELD CONDITIONS WITH THE DRAWINGS. IN PARTICULAR OVERALL WALL DIMENSIONS, INCOMING UTILITIES, ETC. GENERAL CONTRACTOR IS TO REPORT IMMEDIATELY TO THE OWNER CONSTRUCTION REPRESENTATIVE ANY VARIANCES OR FIELD CONDITIONS THAT MAY CAUSE CONSTRUCTION PROBLEMS PRIOR TO COMMENCING WORK.
10. DO NOT SCALE THE DRAWINGS. WRITTEN DIMENSIONS GOVERN. ALL PARTITION LOCATIONS, ALL DOOR AND OPENING LOCATIONS SHALL BE SHOWN ON FLOOR PLAN. IN CASE OF CONFLICT NOTIFY THE OWNER CONSTRUCTION REPRESENTATIVE. FLOOR PLAN BY ARCHITECT SUPERSEDES ALL OTHER PLANS. ALL DIMENSIONS MARKED "CLEAR" SHALL BE MAINTAINED AND SHALL ALLOW FOR THICKNESS OF ALL FINISHES INCLUDING CONCRETE TOPPING, CERAMIC TILE, ETC. "HOLD" DENOTES CRITICAL DIMENSIONS.
11. POST OCCUPANT LOAD SIGN: GENERAL CONTRACTOR SHALL ACQUIRE APPROPRIATE WORDING FOR POSTING OF ROOM CAPACITY FROM PRESIDING AGENCY AND FABRICATE IN COORDINATION WITH OWNER.
12. GENERAL CONTRACTOR TO COORDINATE LOCATIONS OF REQUIRED BLOCKING IN ADVANCE.
13. PROVIDE PORTABLE FIRE EXTINGUISHERS WITH U.L. LABEL AND RATINGS AND REQUIRED TRAVEL DISTANCES TO ALL POSITIONS OF THE BUILDING, AS DIRECTED BY THE FIRE DEPARTMENT FIELD INSPECTOR. MOUNT FIRE EXTINGUISHERS AT LOCATIONS SHOWN OR AS DIRECTED BY FIRE DEPARTMENT. PROVIDE ADDITIONAL IF REQUIRED BY FIRE DEPARTMENT.
14. PLANS FOR AUTOMATIC FIRE SUPPRESSION SYSTEM REQUIRED BY CODE SHALL BE SUBMITTED SEPARATELY. GENERAL CONTRACTOR TO PROVIDE A COMPLETE SET OF PLANS FOR AUTOMATIC FIRE SUPPRESSION SYSTEM TO THE BUILDING DEPARTMENT FOR PLAN REVIEW AND APPROVAL PRIOR TO COMMENCING WORK ON THE PROJECT. PLANS SHALL BE COMPLETED BY THE APPROVED CERTIFIED FIRE PROTECTION SUB-CONTRACTOR. (SEE ALSO FIRE PROTECTION PERFORMANCE SPECIFICATION.)

FIRE DEPARTMENT

1. 2A:10B:C FIRE EXTINGUISHERS SHALL BE PROVIDED IN THE DINING AREAS AND A K CLASS EXTINGUISHERS SHALL BE WITHIN 30 FEET OF COOKING EQUIPMENT. MOUNTING HEIGHT SHALL NOT EXCEED 48" AFF TO THE TOP OF EXTINGUISHER AND TRAVEL DISTANCE TO REACH ONE SHALL NOT EXCEED 75 FEET.
2. THE KITCHEN HOOD EXTINGUISHING SYSTEM SHALL BE INSTALLED IN ACCORDANCE WITH NFPA 17/17A, UL 300 AND THE APPLICABLE MECHANICAL CODE. PLANS AND SPECIFICATIONS SHALL BE SUBMITTED SEPARATELY TO THE FIRE DEPARTMENT AFTER THE BUILDING PERMIT IS ISSUED.
3. A KNOX BRAND BOX SHALL BE INSTALLED ON THE PREMISES TO FACILITATE EMERGENCY ACCESS TO THE BUILDING. IN AN EFFORT TO STANDARDIZE BOX LOCATIONS WE RECOMMEND THAT IT BE MOUNTED NO LOWER THAN 5 FEET AND NO HIGHER THAN 6 FEET ABOVE GRADE ON THE RIGHT SIDE OF THE MAIN ENTRANCE. APPLICATION CAN BE OBTAINED AT THE LOCAL FIRE DEPARTMENT.
4. DECORATIVE MATERIALS, INCLUDING DRAPES AND HANGINGS, MUST BE NONCOMBUSTIBLE, FLAME RESISTANT OR TREATED WITH A FLAME RETARDANT.
5. FIRE SPRINKLER SYSTEM SHALL BE INSTALLED, INSPECTED AND TESTED IN ACCORDANCE WITH THE 2012 NFPA 13. PLANS AND SPECIFICATIONS SHALL BE SUBMITTED SEPARATELY TO THE FIRE DEPARTMENT AFTER THE BUILDING PERMIT IS ISSUED.
6. ALL VALVES CONTROLLING THE SPRINKLER SYSTEM WATER SUPPLY AND FLOW SHALL BE ELECTRICALLY MONITORED AND THE SIGNAL SHALL BE AUTOMATICALLY TRANSMITTED TO A U.L. LISTED STATION WHEN THE NUMBER OF SPRINKLER HEADS EXCEEDS 100.

DEFERRED SUBMITTALS

1. FIRE SUPPRESSION SYSTEM
2. FIRE ALARM SYSTEM
3. HOOD AND HOOD SUPPRESSION SYSTEM
4. SIGNAGE
5. AWNINGS

SYMBOL LEGEND

- DRAWING TITLE . . . . . — FLOOR PLAN 1/4"=1'-0" (1)
- SECTION . . . . . — 1 / A3.5 — SECTION I.D. NUMBER; SHEET WHERE SECTION IS LOCATED
- DETAIL (ENLARGED) . . . . . — 1 / A1.1 — DETAIL I.D. NUMBER; SHEET WHERE SECTION IS LOCATED
- ELEVATION . . . . . — 7/A403 — SHEET WHERE ELEVATION IS LOCATED; ELEVATION I.D. NUMBER
- CEILING HEIGHT . . . . . — 10'-0" — CEILING HEIGHT ABOVE FINISHED FLOOR
- DOOR . . . . . — 1 — DOOR NUMBER DESIGNATION
- WINDOW . . . . . — A — WINDOW NUMBER DESIGNATION
- FINISH MATERIAL . . . . . — P-1 TRIM ONLY — FINISH DESIGNATION; COMMENTS, IF APPLICABLE
- KEYED NOTES . . . . . — 1 — KEYED NOTE DESIGNATION ON APPLICABLE SHEET
- REVISIONS . . . — 1 — ADDENDUM NUMBER; REVISED AREA CLOUDED
- ELEVATION HEIGHT . . . . — T.O. SLAB 100'-0" — REFERENCE POINT; ELEVATION HEIGHT
- EQUIPMENT . . . . . — A — EQUIPMENT NUMBER/LETTER DESIGNATION
- WALL TYPE . . . . . — A — WALL TYPE LETTER

BUILDING INFORMATION

BUILDING AREA:	4,882 S.F.
COOLER/FREEZER AREA:	279 S.F.
TOTAL BUILDING USABLE AREA:	5,161 S.F.

CODE INFORMATION

ZONING CLASSIFICATIONS:	GC- GENERAL COMMERCIAL
BUILDING CODE:	2021 INTERNATIONAL BUILDING CODE
ELECTRICAL CODE:	2020 NATIONAL ELECTRICAL CODE
MECHANICAL CODE:	2021 INTERNATIONAL MECHANICAL CODE
PLUMBING CODE:	2021 INTERNATIONAL PLUMBING CODE
FIRE PREVENTION CODE:	2021 INTERNATIONAL FIRE PREVENTION CODE
ENERGY CODE:	2021 INTERNATIONAL ENERGY CONSERVATION CODE
ACCESSIBILITY CODE:	2021 INTERNATIONAL BUILDING CODE
OCCUPANCY:	A2 RESTAURANT
CONSTRUCTION TYPE:	TYPE VB-SPRINKLERED
BUILDING HEIGHT:	21'-0"
SEATING CAPACITY:	206
OCCUPANCY COUNT:	238
3 BUILDING SHALL BE PROVIDED WITH FULL FIRE SPRINKLER SYSTEM.	

NOTE

A THERMAL ENVELOPE CERTIFICATE PROVIDED BY A 3RD PARTY SHALL BE POST IT IN THE OFFICE SPACE. THIS CERTIFICATE SHALL INCLUDE THE FOLLOWING: THE R-VALUES OF ALL INSULATION INSTALLED ON WALLS, ROOF, FOUNDATION, FLOORS AND ON ANY DUCTWORK LOCATED OUTSIDE OF A CONDITIONED SPACE. THE U-FACTORS AND SHGC'S OF ALL FENESTRATIONS. THE RESULTS FROM ANY BUILDING ENVELOPE AIR LEAKAGE TESTING PERFORMED ON THE BUILDING.

LIST OF CONTACT

OWNER CONTACT
BRINKER INTERNATIONAL, INC.
3000 OLYMPUS BLVD.
DALLAS, TEXAS 75019
PHONE: 972-770-8878
EMAIL: JJ.JAMADAR@BRINKER.COM
CONTACT: JJ JAMADAR

STRUCTURAL
WALLACE ENGINEERING, INC.
200 EAST MATHEW BRADY ST
TULSA, OKLAHOMA 74103
PHONE: 918.584.5858
EMAIL: JHARTMAN@WALLACESE.COM
CONTACT: JUSTIN HARTMAN, P.E. PRINCIPAL

ARCHITECTURAL
ID STUDIO 4, LLC.
6201 CAMPUS CIRCLE DRIVE E.
IRVING, TEXAS 75063
PHONE: 972.870.1288
EMAIL: BCLOPTON@IDSTUDIO4.COM
CONTACT: BRYAN CLOPTON

MECHANICAL/PLUMBING
ID STUDIO 4, LLC.
6201 CAMPUS CIRCLE DRIVE E.
IRVING, TEXAS 75063
PHONE: 972.870.1288
EMAIL: BWILLIS@IDSTUDIO4.COM
CONTACT: BRETT WILLIS

ELECTRICAL
ID STUDIO 4, LLC.
6201 CAMPUS CIRCLE DRIVE E.
IRVING, TEXAS 75063
PHONE: 972.870.1288
EMAIL: BPINTO@IDSTUDIO4.COM
CONTACT: BILL PINTO

CIVIL
FREELAND AND KAUFFMAN, INC.
209 WEST STONE AVENUE
GREENVILLE, NORTH CAROLINA 29609
PHONE: 864.233.5497
EMAIL: TBURNETT@FK-INC.COM
CONTACT: TODD BURNETT

LANDSCAPE
FREELAND AND KAUFFMAN, INC.
209 WEST STONE AVENUE
GREENVILLE, NORTH CAROLINA 29609
PHONE: 864.233.5497
EMAIL: TBURNETT@FK-INC.COM
CONTACT: TODD BURNETT

SIGN VENDOR
FEDERAL HEATH
2300 N. HWY. 121
EULESS, TEXAS 76039
PHONE: 419.357.1917
EMAIL: MMOREHART@FEDERALHEATH.COM
CONTACT: MARK MOREHART

chili's

951 N MAIN STREET
TOOELE, UT 84074

SITE LOCATION MAP

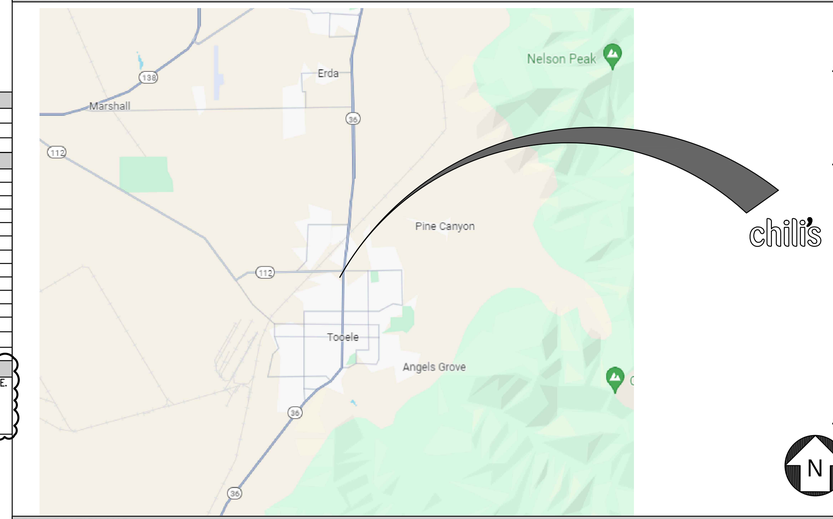

AREA LOCATION MAP

SHEET INDEX:

G100	COVER SHEET	●								
CIVIL:										
C001	COVER SHEET									
C002	GENERAL CONSTRUCTION NOTES									
C011	SURVEY									
C090	LANDLORD DELIVERY PLAN									
C101	SITE PLAN									
C102	GRADING PLAN									
C103	UTILITY PLAN									
C201	STORM PLAN									
C301	ESC PHASE 1 PLAN									
C302	ESC PHASE 2 PLAN									
C303	ESC DETAILS									
C501	SITE PLAN DETAILS									
C502	SITE PLAN DETAILS									
C601-C603	UTILITY DETAILS									
C611	STORM DETAILS									
LANDSCAPE:										
L101	LANDSCAPE PLAN									
L102	LANDSCAPE DETAILS									
L201	IRRIGATION PLAN									
L202	IRRIGATION DETAILS									
STRUCTURAL:										
1 S001	STRUCTURAL NOTES									
S002	SPECIAL INSPECTIONS	●								
S101	FOUNDATION PLAN									
S102-S103	FOUNDATION DETAILS									
S201	ROOF FRAMING PLAN									
S202-S204	ROOF FRAMING DETAILS									
ARCHITECTURAL:										
A001	OCCUPANCY LOAD/EGRESS PLAN	●		●						
A002	FINISH SCHEDULE		●							
A101	DIMENSIONED & NOTED FLOOR PLAN			●						
A102	FURNISHING PLAN AND SCHEDULES			●						
A103	DECOR PLAN AND SCHEDULES	●		●						
A111	FLOOR FINISH PLAN		●	●						
A121	REFLECTED CEILING PLAN		●							
A122	DETAILS	●								
A131	LIGHTING LOCATION PLAN									
A141	ROOF PLAN		●							
A142	ROOF DETAILS									
A151	SERVICE YARD PLAN AND DETAILS	●	●							
A152	SERVICE YARD SECURITY CAGE ELEVATIONS AND DETAILS									
A201-A202	EXTERIOR ELEVATIONS		●							
A203-A204	BUILDING SECTIONS	●								
A300	EXTERIOR WALL SECTIONS	●								
A301	EXTERIOR WALL SECTIONS	●								
A302	EXTERIOR WALL SECTIONS	●								
A304	EXTERIOR DETAILS									
A305	EXTERIOR DETAILS									
1 A306	EXTERIOR DETAILS	●								
A307	WEATHER BARRIER INSTALLATION DETAILS	●								
A401	INTERIOR ELEVATIONS	●		●						
A402	INTERIOR ELEVATIONS	●		●						
A403	INTERIOR ELEVATIONS	●		●						
A404	INTERIOR ELEVATIONS	●								
A405	INTERIOR ELEVATIONS	●								
1 A406	ENLARGED RESTROOM PLAN AND ELEVATIONS	●								
A500	TV AND BAR DIE WALL DETAILS		●							
A501-A502	INTERIOR DETAILS			●						
A504	MILLWORK DETAILS									
A505	BAR COUNTER PLAN, ELEVATIONS AND DETAILS		●							
A506	BAR TOP/BAR DIE WALL SECTIONS AND DETAILS			●						
A601	DOOR AND WINDOW SCHEDULES		●	●						
A602	INTERIOR DOOR DETAILS									
KITCHEN:										
K101	EQUIPMENT PLAN AND SCHEDULE									
K201	BELOW SLAB PLUMBING PLAN									
K211	ABOVE SLAB PLUMBING PLAN									
K301	KITCHEN EQUIPMENT ELECTRICAL PLAN									
K401	FSE EQUIPMENT ELEVATIONS									
K501	MISC. DETAILS									
K502	FSE EQUIPMENT ELEVATIONS									
SIGNAGE:										
1 SIGN01-102	SIGNAGE SHEETS									
MECHANICAL:										
MPE101	MPE SITE PLAN									
MPE201	MPE ROOF PLAN	●								
M101	MECHANICAL FLOOR PLAN									
M201	MECHANICAL BUILDING SECTIONS									
M301	MECHANICAL DETAILS	●								
M302	MECHANICAL DETAILS									
M401	MECHANICAL NOTES & ABBREVIATIONS									
M402	MECHANICAL SCHEDULES			●						
M501-M511	ACCUREX DRAWINGS	●	●							
PLUMBING:										
P101	PLUMBING SANITARY PLAN									
P102	PLUMBING WATER AND GAS PLAN									
P201	DWV RISER DIAGRAM									
P202	WATER & GAS RISER DIAGRAMS	●								
P301-P303	PLUMBING DETAILS	●	●							
P401	PLUMBING NOTES AND ABBREVIATIONS			●						
P402	PLUMBING SCHEDULES			●						
ELECTRICAL:										
E101	ELECTRICAL LIGHTING PLAN		●							
E101A	ELECTRICAL PHOTOMETRIC PLAN	●								
E102	ELECTRICAL POWER PLAN			●						
3 E103	ELECTRICAL SPECIAL SYSTEM PLAN									
E201	ELECTRICAL RISER DIAGRAM AND DETAILS									
E202	ELECTRICAL DETAILS AND SCHEDULES									
E203-E204	ELECTRICAL DETAILS									
E301	ELECTRICAL SCHEDULES		●							
T101	FIRE ALARM/ SECURITY MONITORING SYSTEMS PLAN									
T102	Co2 SYSTEMS PLAN									
SPECIFICATIONS:										
SP100-SP119	SPECIFICATIONS									

DATE	REVISION	ISSUE
08.07.2024	1	CITY COMMENTS
08.23.2024	2	OWNER COMMENTS
09.10.2024	3	CITY COMMENTS

ARCHITECT:
DAVID SCOTT WINDLE, AIA

6201 CAMPUS CIRCLE DRIVE E.
IRVING, TEXAS 75038
TEL: 972.870.1288
WWW.IDSTUDIO4.COM
E-MAIL scottw@idstudio4.com

CORPORATE:
BRINKER RESTAURANT CORPORATION,
A VIRGINIA CORPORATION
3000 OLYMPUS BLVD.
DALLAS, TEXAS 75019
972.980.9917
www.brinker.com

09/23/2024
ISSUE FOR BID
THESE DOCUMENTS ARE FOR BIDDING PURPOSES ONLY. DO NOT USE FOR CONSTRUCTION.

RESTAURANT #CH1679
PROTOTYPE 18.5FS

CHILI'S TOOELE
951 N MAIN STREET
TOOELE, UT 84074

CLIENT: BRINKER RESTAURANT CORP.
A VIRGINIA CORPORATION

chili's

DATE	DESCRIPTION
6/27/2024	ISSUE FOR PERMIT
9/23/2024	ISSUE FOR BID

1	DATE	DESCRIPTION
1	08.07.2024	CITY COMMENTS
2	08.23.2024	OWNER COMMENTS
3	09.10.2024	CITY COMMENTS

PROJECT NUMBER:
CHI24007

SHEET TITLE:
COVER SHEET

SHEET NUMBER:
G100

SITE DEVELOPMENT PLANS

FOR

BRINKER RESTAURANT CORPORATION, A VA CORPORATION

EVERY DIGGING JOB REQUIRES A CALL - EVEN SMALL PROJECTS LIKE PLANTING TREES OR SHRUBS. IF YOU HIT AN UNDERGROUND UTILITY LINE WHILE DIGGING, YOU CAN HARM YOURSELF OR TA/ORSE AROUND YOU, DISRUPT SERVICE TO AN ENTIRE NEIGHBORHOOD AND POTENTIALLY BE RESPONSIBLE FOR FINES AND REPAIR COSTS.

SMART DIGGING MEANS CALLING 811 BEFORE EACH JOB. WHETHER YOU ARE A HOMEOWNER OR A PROFESSIONAL EXCAVATOR, ONE CALL TO 811 GETS YOUR UNDERGROUND UTILITY LINES MARKED FOR FREE.

ISSUED FOR BID
9/12/2024, NOT FOR CONSTRUCTION

chili's

PROTOTYPE 18.5S
RESTAURANT #CHI679

951 N MAIN ST.
TOOELE, UT 84074

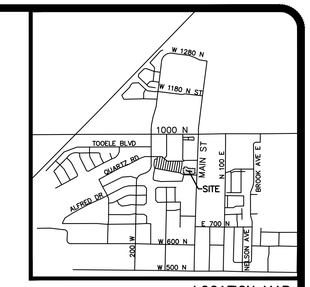

LOCATION MAP
N.T.S.

TENANT/DEVELOPER

BRINKER RESTAURANT CORPORATION, A VA CORPORATION

3000 OLYMPUS BLVD
DALLAS, TX 75019

ATTN: DANA MEEHAN
972.770.4958
DANA.MEEHAN@BRINKER.COM

CONTACTS

CIVIL ENGINEER (OF RECORD)
CONTACT: TODD BURNETT
8642823039

CIVIL ENGINEER (PROJECT MANAGER)
CONTACT: TODD BURNETT
8642823039

GEOTECH ENGINEER (OF RECORD)
CONTACT: AGEC APPLIED GEOTECH
8015666493

LANDSCAPE
CONTACT: TODD BURNETT
8642823039

OVERALL DEVELOPMENT

THIS DEVELOPMENT IS A PORTION OF THE PREVIOUSLY APPROVED OVERALL DEVELOPMENT NAMED "FOUNDERS POINTE SHOPPING CENTER"

Sheet List Table

Sheet Number	Sheet Title
C001	COVER
C002	GENERAL NOTES
C011	SURVEY
C090	LANDLORD DELIVERY PLAN
C101	SITE PLAN
C102	GRADING PLAN
C103	UTILITY PLAN
C201	STORM PLAN
C301	ESC PHASE 1 PLAN
C302	ESC PHASE 2 PLAN
C303	ESC DETAILS
C501	SITE DETAILS
C502	SITE DETAILS
C601	UTILITY DETAILS
C602	UTILITY DETAILS
C603	UTILITY DETAILS
C611	STORM DETAILS
L101	LANDSCAPE PLAN
L102	LANDSCAPE DETAILS
L201	IRRIGATION PLAN
L202	IRRIGATION DETAILS

LEGEND

PROPOSED BY CHILI'S	DESCRIPTION
(6)	NUMBER OF SPACES PER ROW
	HANDICAP SYMBOL
	SIGN
	SITE LIGHTING FIXTURES
	STRIPING
	CONCRETE PAVEMENT/ SIDEWALK
	HEAVY DUTY CONCRETE
2"W	WATER LINE
UE	UNDERGROUND ELECTRIC LINE
4"SS	SANITARY SEWER LINE
GAS	UNDERGROUND GAS LINE
UT	UNDERGROUND TELEPHONE LINE
IP	INLET PROTECTION
	ESC FIBER ROLL

EXISTING	PROPOSED (CHILI'S)	DESCRIPTION
		STORM DRAIN
	12.5	SPOT ELEVATION
662	662	CONTOUR

GENERAL NOTES

CALL BEFORE YOU DIG: BLUE STAKES OF UTAH UTILITY LOCATION SERVICE UTAH 811 • 800-662-4111

1. ALL NEW UTILITES WILL BE LOCATED UNDERGROUND.
2. ALL WORK SHALL CONFORM TO TOOELE CITY & TOOELE COUNTY STANDARDS.
3. ALL CURB/HANDICAP RAMP DESIGNS SHALL CONFORM TO ADA, STATE ACCESSIBILITY CODE, OR TOOELE CITY STANDARDS, WHICHEVER IS MORE RESTRICTIVE.
4. INFORMATION CONCERNING UNDERGROUND UTILITIES WAS OBTAINED FROM AVAILABLE RECORDS AND FIELD CONDITIONS WHEN POSSIBLE. BUT THE CONTRACTOR MUST DETERMINE THE EXACT LOCATION AND ELEVATION OF ALL EXISTING UTILITIES BY DIGGING TEST PITS BY HAND AT ALL UTILITY CROSSINGS WELL IN ADVANCE OF TRENCHING.
5. THE CONTRACTOR SHALL INCLUDE IN HIS CONTRACT PRICE THE REMOVAL AND DISPOSAL OF ANY EXCESS TOPSOIL HE DETERMINES IS NOT REQUIRED TO PERFORM THE FINAL GRADING AND LANDSCAPING OPERATION. THE CONTRACTOR MUST ALSO BRING IN ANY TOPSOIL NECESSARY TO PERFORM LANDSCAPING IF NONE IS AVAILABLE.
6. THE CONTRACTOR IS RESPONSIBLE FOR THE DESIGN AND IMPLEMENTATION OF ALL REQUIRED/NECESSARY SHEETING, SHORING, BRACING, AND SPECIAL EXCAVATION MEASURES REQUIRED ON THE PROJECT TO MEET OSHA, FEDERAL, STATE, AND LOCAL REGULATIONS PURSUANT TO THE INSTALLATION OF THE WORK INDICATED ON THE DRAWINGS. BRINKER AND ENGINEER ACCEPT NO RESPONSIBILITY FOR THE DESIGN TO INSTALL SAID ITEMS.
7. THE CONTRACTOR SHALL VERIFY THE SIZE, INVERT, ETC. OF ALL EXISTING STORM DRAINS AND OTHER FEATURES PRIOR TO START OF WORK. NO PIPE SHALL BE INSTALLED UNTIL INFORMATION CONCERNING EXISTING SITE FEATURES HAS BEEN FIELD VERIFIED. THE CONTRACTOR SHALL NOTIFY THE BRINKER CONSTRUCTION MANAGER OF ANY DISCREPANCIES PRIOR TO START OF WORK.
8. THE CONTRACTOR SHALL HIRE A SURVEYOR FOR ANY GOVERNMENTAL AGENCY REQUIRED AS-BUILT SURVEYS, AND ETC.
9. THE CONTRACTOR SHALL REFER TO AND ABIDE BY ALL PERMIT DOCUMENTS AND GOVERNMENTAL AGENCY INSPECTIONS / REPRESENTATIVES DIRECTIONS FOR ANY ADDITIONAL REQUIREMENTS OF SAID AGENCIES.
10. THE CONTRACTOR SHALL PROVIDE ALL INFORMATION, AS-BUILTS, TESTING RESULTS, ETC., TO THE ENGINEER IN TIME TO OBTAIN CERTIFICATIONS AS NEEDED FROM ALL STATE AND LOCAL OFFICIALS AT A MINIMUM OF 3 WEEKS PRIOR TO NEEDING CERTIFICATE OF OCCUPANCY.
11. CONTRACTOR SHALL PROTECT ALL EXISTING CONSTRUCTION. CONTRACTOR SHALL BE RESPONSIBLE FOR THE COST OF ANY REPAIRS.

UTILITY CONTACTS

ELECTRICAL
ROCKY MOUNTAIN POWER
ATTN: CUSTOMER SERVICE
TEL: 888-221-7070
EMAIL:

NATURAL GAS
DOMINION ENERGY
ATTN: CUSTOMER SERVICE
TEL: 800-323-5517
EMAIL:

SANITARY SEWER
TOOELE CITY
90 N. MAIN ST.
TOOELE, UT 84074
ATTN: JAMIE GRANDPRE
PHONE: 435-843-2130
EMAIL: JAMIEG@TOOELECITY.ORG

TELEPHONE
XFINITY (COMCAST)
ATTN: CUSTOMER SERVICE
TEL: 800-934-6489

CABLE
XFINITY (COMCAST)
ATTN: CUSTOMER SERVICE
TEL: 800-934-6489

WATER
TOOELE CITY
90 N. MAIN ST.
TOOELE, UT 84074
ATTN: JAMIE GRANDPRE
PHONE: 435-843-2130
EMAIL: JAMIEG@TOOELECITY.ORG

PROJECT LOCATION

LATITUDE: 40.548338,
LONGITUDE: 112.298838

GOVERNMENT AGENCY CONTACTS

PLANNING AND ZONING OFFICIAL
TOOELE CITY
90 N. MAIN ST.
TOOELE, UT 84074
ATTN: ANDREW AAGARD
TEL: 435-843-2132
EMAIL: ANDREWA@TOOELECITY.ORG

ENGINEERING AUTHORITY
TOOELE CITY
90 N. MAIN ST.
TOOELE, UT 84074
ATTN: PAUL HANSON
TEL: 435-843-2132
EMAIL: PAULH@TOOELECITY.ORG

BUILDING OFFICIAL
TOOELE CITY
90 N. MAIN ST.
TOOELE, UT 84074
ATTN: BRAD ALDER
TEL: 435-843-2132
EMAIL: BRADA@TOOELECITY.ORG

HEALTH AUTHORITY
TOOELE COUNTY HEALTH DEPARTMENT
151 N. MAIN ST
TOOELE, UT 84074
ATTN: WADE TOLBERT
TEL: 435-277-2453
EMAIL: WTOLBERT@TOOELEHEALTH.ORG

FIRE DEPARTMENT
TOOELE CITY
90 N. MAIN ST.
TOOELE, UT 84074
ATTN: MATT MCCOY
TEL: 435-843-2212
EMAIL: MMCCOY@TOOELECITY.ORG

STORM WATER
TOOELE CITY
90 N. MAIN ST.
TOOELE, UT 84074
ATTN: PAUL HANSON
TEL: 435-843-2132
EMAIL: PAULH@TOOELECITY.ORG

CHILI'S SITE DATA

PROPERTY AREA	1.27 ACRES
TOTAL SEATING	206 SEATS
BUILDING AREA	5,161 SF
ZONING	GC - GENERAL COMMERCIAL
USAGE	FULL SERVICE RESTAURANT
PROPERTY ID	02-004-0-0063
SETBACK LINES	FRONT: 30' SIDE: NONE REAR: NONE

FLOOD INFORMATION

FLOOD ZONE "X" (MINIMAL FLOOD HAZARD) PER FEMA MAP 49045C1645C EFFECTIVE DATE 11/18/2009

FREELAND and KAUFFMAN, INC.
Engineers and Landscape Architects
209 West Stone Avenue
Greenville, South Carolina 29609
864-672-9415
fax 864-233-8915

DRAWN BY:	JMD
CHECKED BY:	TMB
DATE:	05-31-2024

PROFESSIONAL ENGINEER
No. 13898119-2202
TODD BURNETT
STATE OF UTAH
09/12/2024

TOOELE CITY APPROVAL BLOCK

SHEET C001

GENERAL NOTES - PAVING AND STORM SEWERS

1. PAVING AND STORM SEWERS SHALL BE CONSTRUCTED IN ACCORDANCE WITH PLANS, UDOT, AND TOOELE CITY STANDARD SPECIFICATIONS AND DETAILS.
2. CONTRACTOR SHALL VERIFY LOCATION OF ALL EXISTING UTILITIES BEFORE CONSTRUCTION.
3. PROVIDE CONTRACTION JOINTS AT 15' CTRS. MAXIMUM IN P.C.C. PAVEMENT. PROVIDE EXPANSION JOINTS AT ALL RADIUS POINTS IN P.C.C. CURB AND GUTTER AND AS SHOWN ON THE DETAILS OR AS DIRECTED BY THE BRINKER CONSTRUCTION MANAGER.
4. P.C.C. SIDEWALK SHALL BE OF THE WIDTH AND THICKNESS AS INDICATED ON THE PLANS. CROSS SLOPES SHALL BE 1/4" PER FOOT. INSTALL 3/4" ZIP STRIP EXPANSION JOINTS AT THE SIDEWALK-CURB JOINT AND AT MAXIMUM 50 FOOT CENTERS. CONTROL JOINTS ARE TO BE HAND TOOLED AT 1/2" NOMINAL DEPTH AND AT 5'0" ON CENTER.
5. ALL PIPE SHALL BE BEDDED IN 4" SAND OR GRAVEL BEDDING. BEDDING MATERIALS SHALL EXTEND TO UNDISTURBED EARTH.
6. ALL EXCESS TRENCHING MATERIAL SHALL BE INCORPORATED IN THE EMBANKMENT ON SITE AS DIRECTED BY THE BRINKER CONSTRUCTION MANAGER. ALL TRENCHING OPERATIONS WITHIN A PREPARED SUBGRADE SHALL BE BACKFILLED IN SUCH A MANNER THAT THE SUBGRADE WILL REMAIN IN THE CONDITION EXISTING BEFORE CONSTRUCTION OPERATIONS BEGAN. THE CONTRACTOR WILL BE HELD LIABLE FOR THE COST OF ANY GRADING OPERATIONS NECESSARY TO CORRECT FAULTY BACKFILLING OR CLEANUP PROCEDURES.
7. 12 INCH STORM SEWERS AND LARGER SHALL BE HDPE OR RCP IN ACCORDANCE WITH AASHTO M-294 TYPE S OR SP, REINFORCED CONCRETE PIPE (RCP)- ASTM C 76, CLASS III UNLESS NOTED OTHERWISE ON DRAWINGS. ALL HDPE OR HDPP STORM PIPE SHALL BE WATERTIGHT, PER ASTM D3212. GASKETS PER ASTM F477. ALL RCP STORM PIPE SHALL BE WATER TIGHT PER ASTM C361. GASKETS PER ASTM C433.
8. STORM DRAINS SMALLER THAN 12" SHALL BE POLYVINYL CHLORIDE (PVC) SEWER PIPE CONFORMING TO ASTM D-3034. MINIMUM WALL THICKNESS SHALL BE STANDARD DIMENSION RATIO (SDR) 35. PIPE JOINTS FOR PVC PIPE SHALL BE FLEXIBLE ELASTOMERIC SEALS PER ASTM D-3212. WHERE PVC SEWER PIPE IS USED, BEDDING AND HAUNCHING AND INITIAL BACKFILL (TO 12" OVER THE TOP OF THE PIPE) SHALL BE IN ACCORDANCE WITH STANDARD SPECIFICATIONS AND ASTM D-2321. CLASS I MATERIAL SHALL ALSO BE USED FOR HAUNCHING AND FOR THE INITIAL BACKFILL TO 12" OVER THE PIPE. ALL PVC STORM PIPE SHALL BE WATERTIGHT PER ASTM D3212.
9. SUBSTITUTIONS FOR DOT CASTINGS INDICATED ON THE PLANS MUST BE APPROVED IN ADVANCE BY THE BRINKER CONSTRUCTION MANAGER AND THE TOOELE CITY ENGINEERING DEPARTMENT
10. PVC CONDUIT, SCHEDULE 40, ELECTRICAL GRADE SHALL BE INSTALLED AT LOCATIONS SHOWN ON THE PLANS AT 24"-30" DEPTH BELOW SUBGRADE FOR FUTURE UTILITY INSTALLATION. CONDUITS SHALL BE TRENCH BACKFILLED, LENGTH OF THE CONDUIT SHALL EXTEND TO 2 FEET BEYOND THE CURB AND GUTTER OR SIDEWALK UNLESS OTHERWISE INDICATED ON THE PLANS AND ENDS TAPED W/ DUCT TAPE. A PULL STRING OR WIRE SHALL BE INSTALLED IN THE CONDUIT. THE CONTRACTOR SHALL MARK LOCATIONS OF BURIED CONDUIT BY A SCORE LINE IN THE TOP OF THE CURB DURING PAVING OPERATIONS.
11. ALL DIMENSIONS AND LENGTHS FOR STORM SEWERS ARE TO THE CENTER OF STRUCTURE
12. RIM ELEVATIONS ON CURB CASTINGS ARE TO TOP OF GRATE.
13. BUILDING PAD BACKFILL WILL BE PROVIDED WHEN THE INNER EDGE OF TRENCH OR MANHOLE EXCAVATION IS WITHIN 2 FEET OF ANY PROPOSED OR EXISTING PAVEMENT, CURB, OR SIDEWALK. NO EXTRA COMPENSATION WILL BE ALLOWED FOR THIS WORK.
14. ALL STORM PIPE SHALL BE TESTED AS FOLLOWS:
    - 14.1. VISIBLY INSPECT AND REMOVE ALL DEBRIS AND OBSTRUCTIONS FROM STORM PIPE.
    - 14.2. TEST FOR INFILTRATION AND EXFILTRATION BY HYDROSTATIC TESTING PER ASTM C969. MANHOLES AND CONCRETE PIPE SHALL CONFORM TO ASTM C969 LEAKAGE CRITERIA.
    - 14.3. TEST WATERTIGHT JOINTS IN ACCORDANCE WITH REQUIREMENTS OF JURISDICTIONAL AUTHORITIES, UNI-B-6 AND THE FOLLOWING:
      - 14.3.1. OPTION: TEST PLASTIC PIPING ACCORDING TO ASTM F 1417 OR ASTM F 2487
      - 14.3.2. OPTION: TEST CONCRETE PIPING ACCORDING TO ASTM C 924 OR ASTM C969

GENERAL NOTES - GRADING AND EROSION CONTROL

1. EARTHWORK SHALL BE IN ACCORDANCE WITH THE PLANS AND GEOTECHNICAL REPORT BY APPLIED GEOTECHNICAL ENGINEERING CONSULTANTS, INC.
2. THE CONTRACTOR SHALL BE RESPONSIBLE FOR GRADING INCLUDING EXCAVATION, EMBANKMENT, AND BACKFILLING AS NECESSARY TO CONSTRUCT ALL PAVEMENT, LANDSCAPE, AND SIDEWALKS TO THE ELEVATIONS SHOWN ON THE PLANS.
3. THE CONTRACTOR SHALL BE HELD RESPONSIBLE FOR ANY DAMAGE DONE TO EXISTING STORM OR SANITARY MANHOLES OR OTHER EXISTING UTILITIES DURING GRADING.
4. EXISTING VEGETATION AND TOPSOIL SHALL BE REMOVED AS SHOWN ON THE PLANS AND AS DIRECTED BY THE BRINKER CONSTRUCTION MANAGER. REMOVAL SHALL BE TO A DEPTH AS NEEDED TO REMOVE ALL ORGANIC MATERIAL.
5. EMBANKMENT WITHIN THE PROPOSED PAVEMENT AND BUILDING SITE AREAS SHALL BE COMPACTED AS SPECIFIED IN THE GEOTECHNICAL REPORT BY APPLIED GEOTECHNICAL ENGINEERING CONSULTANTS, INC. DATED MARCH 04, 2019
6. LANDSCAPED AREAS SHALL RECEIVE A MINIMUM OF 6 INCHES OF TOPSOIL IN EMBANKMENT AREAS. EXCAVATION AREAS SHALL BE UNDERCUT 6" IN LANDSCAPED AREAS TO ACCOMMODATE 6" OF TOPSOIL TO FINISH GRADE.
7. LANDSCAPING SHALL TAKE PLACE AS SOON AS FINISH GRADING OPERATIONS ARE COMPLETE, UNLESS DIRECTED OTHERWISE BY THE OWNER.
8. NO BLASTING SHALL BE ALLOWED. ANY ROCK ENCOUNTERED MUST BE EXCAVATED WITHOUT BLASTING.

GENERAL NOTES - ADA

1. THE CONTRACTOR IS RESPONSIBLE FOR INSURING THAT ALL ACCESSIBLE AREAS ARE BUILT IN ACCORDANCE WITH THE PLANS, THE AMERICANS WITH DISABILITIES ACT ACCESSIBILITY GUIDELINES (ADAAG) AND LOCAL/STATE REQUIREMENTS. THE SITE WILL BE INSPECTED BY TOOELE CITY AND OR TOOELE COUNTY PERSONNEL FOR COMPLIANCE.
2. ALL ADA ACCESSIBLE PARKING STALLS SHALL MEET ADA REQUIREMENTS PER THE ADAAG SECTION 4.6. ALL ADA ACCESSIBLE PARKING SHALL BE CONSTRUCTED WITH A MAXIMUM SLOPE OF 2% IN ANY DIRECTION.
3. ALL ADA ACCESSIBLE ROUTES SHALL MEET ADA REQUIREMENTS PER THE ADAAG SECTION 4.3. ALL ADA ACCESSIBLE ROUTES SHALL BE CONSTRUCTED WITH A MAXIMUM CROSS SLOPE OF 2% AND A MAXIMUM LONGITUDINAL SLOPE OF 5%.
4. ALL ADA MANEUVERING AREAS AT DOORS SHALL MEET ADA REQUIREMENTS PER THE ADAAG SECTION 4.13.6. ALL ADA MANEUVERING AREAS SHALL BE CONSTRUCTED WITH A MAXIMUM SLOPE OF 2% IN ANY DIRECTION.

GENERAL NOTES - AUTHORITY AND RESPONSIBILITY

1. THE ENGINEER, AS REPRESENTATIVE OF THE OWNER, SHALL NOT GUARANTEE THE WORK OF ANY CONTRACTOR OR SUBCONTRACTOR, SHALL HAVE NO AUTHORITY TO STOP WORK, SHALL HAVE NO SUPERVISION OR CONTROL AS TO THE WORK OR PERSONS DOING THE WORK, SHALL NOT HAVE CHARGE OF THE WORK, SHALL NOT BE RESPONSIBLE FOR SAFETY IN, ON, OR ABOUT THE JOB SITE OR HAVE ANY CONTROL OF THE SAFETY OR ADEQUACY OF ANY EQUIPMENT, BUILDING COMPONENT, SCAFFOLDING, SUPPORTS, FORMS, OR OTHER WORK AIDS, AND SHALL HAVE NO DUTIES OR RESPONSIBILITIES IMPOSED BY THE STRUCTURAL WORK ACT.

NOTES - COOPERATION BETWEEN CONTRACTORS

1. LOCATED ADJACENT TO OR IN THE GENERAL VICINITY OF THE LIMITS OF THE PROJECT, ADDITIONAL PROJECTS MAY BE UNDER CONTRACT DURING THE TIME THIS CONTRACT IS IN FORCE. THE CONTRACTOR FOR THIS PROJECT SHALL COOPERATE WITH THE CONTRACTORS OF THIS PROJECT AND OTHER PROJECTS AS PROVIDED IN THE DOT "STANDARD SPECIFICATIONS FOR ROAD AND STRUCTURES", CURRENT EDITION. SPECIFIC COORDINATION ITEMS BY OTHERS INCLUDE BUT ARE NOT LIMITED TO:
   - A. CONSTRUCTION OF ANY PUBLIC IMPROVEMENTS ALONG ADJACENT RIGHT-OF-WAYS.
   - B. CONSTRUCTION OF PAVING, STORM SEWERS, AND APPURTENANCES FOR ADJACENT LOT DEVELOPMENT.
   - C. CONSTRUCTION OF UTILITIES ON AND OFF SITE INCLUDING GAS, WATER, ELECTRIC, TELEPHONE, AND CABLEVISION.
   - D. PLANTING AND MAINTENANCE OF LANDSCAPE ITEMS.
2. THESE ITEMS OF WORK MAY OR MAY NOT BE IN PLACE AT THE TIME OF CONSTRUCTION OF THIS PROJECT. WHEN ADJACENT WORK IS FOUND IN PLACE THE CONTRACTOR SHALL MAKE THE NECESSARY CONNECTION IN A MANNER APPROVED BY THE BRINKER CONSTRUCTION MANAGER. ANY CONNECTIONS MADE TO EXISTING UTILITIES THAT ARE OWNED BY TOOELE CITY SHALL BE IN ACCORDANCE WITH TOOELE CITY STANDARDS. WHEN ADJACENT WORK ITEMS ARE NOT YET CONSTRUCTED, THE CONTRACTOR SHALL CONSTRUCT THE NECESSARY JOINTS, STUBS, OR PLUGS FOR FUTURE CONNECTIONS AS DIRECTED BY THE BRINKER CONSTRUCTION MANAGER.

GENERAL NOTES - SANITARY SEWERS & WATER SYSTEM

WATER AND SEWER MAIN CONSTRUCTION SHALL COMPLY WITH THE TOOELE CITY ENGINEERING DEPARTMENT STANDARDS. MATERIALS AND CONSTRUCTION METHODS SHALL COMPLY WITH TOOELE CITY UTILITIES STANDARDS.

1. 6" SANITARY SERVICE SEWERS SHALL BE SLOPED A MINIMUM OF 1/8" PER FOOT. PIPE MATERIAL FOR 6 INCH AND 4 INCH SERVICE SEWERS SHALL BE:

   SCHEDULE 40 (SCH. 40) SEWER PIPE & FITTINGS CONFORMING TO ASTM D-1785/D-2665. PIPE JOINTS FOR SCH. 40 PIPE SHALL BE FLEXIBLE ELASTOMERIC SEALS PER ASTM D-3212. WHERE SCH. 40 SEWER PIPE IS USED, BEDDING AND HAUNCHING AND INITIAL BACKFILL (TO 12" OVER THE TOP OF THE PIPE) SHALL BE IN ACCORDANCE WITH STANDARD SPECIFICATIONS AND ASTM D-2321. CLASS I MATERIAL SHALL ALSO BE USED FOR HAUNCHING AND FOR THE INITIAL BACKFILL TO 12" OVER THE PIPE. 12 GAUGE TRACER WIRE TO BE INSTALLED OVER SEWER PIPE.
2. DOMESTIC WATER SERVICE LINES 2" AND LARGER SHALL BE PVC, RATED 200 PSI W/ 12 GAUGE TRACER WIRE. PIPES SMALLER THAN 2" DIAMETER SHALL BE PLASTIC IPS BLUE POLYTUBING, (SDR 7), RATED 250 PSI W/ 12 GAUGE TRACER WIRE. FIRE SERVICE WATER LINES SHALL BE DIP (ANSI A21.51 MIN. PRESSURE CLASS 350, CEMENT LINED PER ANSI A21.4, PUSH ON JOINTS PER ANSI A21.11, EXCEPT GASKETS SHALL BE SYNTHETIC RUBBER. ALL WATER PIPE AND FITTINGS SHALL BE PER TOOELE CITY UTILITIES DEPARTMENT
3. THE JOINTING OF DISSIMILAR PIPES SHALL BE ACCOMPLISHED BY USING APPROVED FABRICATED COUPLINGS AND CONCRETE ENCASEMENT 12" EITHER SIDE OF JOINT.
4. THE INVERT OF ANY SERVICE CONNECTION MADE IN MANHOLES SHALL ENTER THE MANHOLE AT A POINT WHICH IS BETWEEN THE CENTERLINE AND THE TOP OF THE MAIN SEWER LINE IN THE MANHOLE AND SHALL BE FILLETED TO MEET THE INVERT OF THE MAIN SEWER LINE.
5. ALL EXCESS MATERIAL SHALL BE LOCATED SITE AS DIRECTED BY THE OWNER'S REPRESENTATIVE. ALL TRENCHING OPERATIONS WITHIN A PREPARED STREET SUBGRADE SHALL BE BACKFILLED IN SUCH A MANNER THAT THE SUBGRADE WILL REMAIN IN THE CONDITION EXISTING BEFORE CONSTRUCTION OPERATIONS BEGAN. THE CONTRACTOR WILL BE HELD LIABLE FOR THE COST OF ANY GRADING OPERATIONS NECESSARY TO CORRECT FAULTY BACKFILLING OR CLEANUP PROCEDURES.
6. PROVIDE BUILDING PAD BACKFILL WHEN INNER EDGE OF TRENCH OR MANHOLE EXCAVATION IS WITHIN 2 FEET OF ANY PROPOSED OR EXISTING PAVEMENT, CURB, OR SIDEWALK.

DOMESTIC WATER SERVICE				
ITEMS	UTILITY SERVICE PROVIDER	LANDLORD	GC	REMARKS
2" WATER EXTENSION FROM WATER MAIN		PROVIDE AND INSTALL		
2" WATER LINE TO METER		PROVIDE AND INSTALL		
2" DOMESTIC WATER METER	PROVIDE	INSTALL		
2" DOMESTIC SERVICE FROM METER TO LL DELIVERED STUB		PROVIDE AND INSTALL		
DOMESTIC BACKFLOW INSIDE BUILDING			PROVIDE AND INSTALL	
2" DOMESTIC SERVICE FROM LL DELIVERED STUB TO BUILDING			PROVIDE AND INSTALL	

FIRE SPRINKLER SERVICE				
ITEMS	UTILITY SERVICE PROVIDER	LANDLORD	GC	REMARKS
4" FIRELINE FROM MAIN TO STUB		PROVIDE AND INSTALL		
4" FIRE LINE FROM LANDLORD STUB TO BUILDING			PROVIDE AND INSTALL	
BUILDING MOUNTED FDC			PROVIDE AND INSTALL	
FIRE BACKFLOW PREVENTER INSIDE BUILDING			PROVIDE AND INSTALL	

IRRIGATION WATER SERVICE				
ITEMS	UTILITY SERVICE PROVIDER	LANDLORD	GC	REMARKS
OVERALL CENTRAL IRRIGATION SYSTEM		PROVIDE AND INSTALL		
1" IRRIGATION WATERLINE FROM OVERALL SYSTEM TO LL STUB		PROVIDE AND INSTALL		
1" IRRIGATION WATERLINE FROM LL STUB TO CHILI'S LANDSCAPE			PROVIDE AND INSTALL	

SANITARY SEWER SERVICE				
ITEMS	UTILITY SERVICE PROVIDER	LANDLORD	GC	REMARKS
6" SANITARY SEWER FROM MAIN TO LL STUB		PROVIDE AND INSTALL		
SANITARY MANHOLE, SAMPLING WELL, & GREASE TRAP			PROVIDE AND INSTALL	
4" SANITARY SEWER & 4" GREASE WASTE FROM BLDG TO LL STUB			PROVIDE AND INSTALL	

ELECTRIC SERVICE				
ITEMS	UTILITY SERVICE PROVIDER	LANDLORD	GC	REMARKS
PRIMARY SERVICE CONDUITS FROM POINT OF CONNECTION TO TRANSFORMER/ ELECTRICAL BOX		PROVIDE AND INSTALL		
TRANSFORMER/ ELECTRICAL BOX FOR CHILI'S SERVICE		PROVIDE AND INSTALL		
SECONDARY SERVICE FROM TRANSFORMER TO LL STUB		PROVIDE AND INSTALL		
CT CABINET & MEP			PROVIDE AND INSTALL	
SECONDARY SERVICE FROM LL STUB TO BUILDING			PROVIDE AND INSTALL	
METER	PROVIDE AND INSTALL			

GAS SERVICE				
ITEMS	UTILITY SERVICE PROVIDER	LANDLORD	GC	REMARKS
SERVICE FROM POINT OF CONNECTION TO LL STUB	PROVIDE AND INSTALL			
METER	PROVIDE AND INSTALL		COORDINATE	
SERVICE FROM LL STUB TO METER (SUPPLY SIDE)	PROVIDE AND INSTALL		COORDINATE	
SERVICE FROM DEMAND SIDE OF METER TO BLDG			PROVIDE AND INSTALL	

TELECOMMUNICATION SERVICE				
ITEMS	UTILITY SERVICE PROVIDER	LANDLORD	GC	REMARKS
CONDUITS FOR TELECOMMUNICATIONS SERVICE FROM POINT OF CONNECTION TO LL STUB		PROVIDE AND INSTALL		
CONDUITS FOR TELECOMMUNICATIONS SERVICE FROM LL STUB TO BUILDING			PROVIDE AND INSTALL	
TELECOMMUNICATIONS SERVICE ACTIVATION	PROVIDE AND INSTALL		COORDINATE	

GENERAL NOTES - TRAFFIC CONTROL

1. WHENEVER CONSTRUCTION OPERATIONS ENCROACH ON THE RIGHT-OF-WAY OF ADJACENT ROADWAYS, TRAFFIC CONTROL SHALL BE PROVIDED IN ACCORDANCE WITH LOCAL AND STATE STANDARDS.
2. NO MATERIALS OR EQUIPMENT SHALL BE STORED OR STOCKPILED WITHIN THE RIGHT-OF-WAY OF ADJACENT ROADWAYS.

GENERAL NOTES

0' 10' 20'
SCALE 1" = 10'

REVISIONS	BY

FREELAND and KAUFFMAN, INC.
Engineers * Landscape Architects
209 West Stone Avenue
Greenville, South Carolina 29609
864-233-5497
fax 864-233-8915

PROFESSIONAL ENGINEER No.13889119-2202 TODD BURNETT STATE OF UTAH
09/12/2024

CHILI'S GRILL & BAR
951 N MAIN STREET
TOOELE, UT 84074
BRINKER INTERNATIONAL
3000 OLYMPUS BLVD
DALLAS, TX 75019

DRAWN	JMD
CHECKED	TMB
DATE	09/12/2024
SCALE	AS SHOWN
DRAWING	C002

ISSUED FOR BID SEPTEMBER 12, 2024

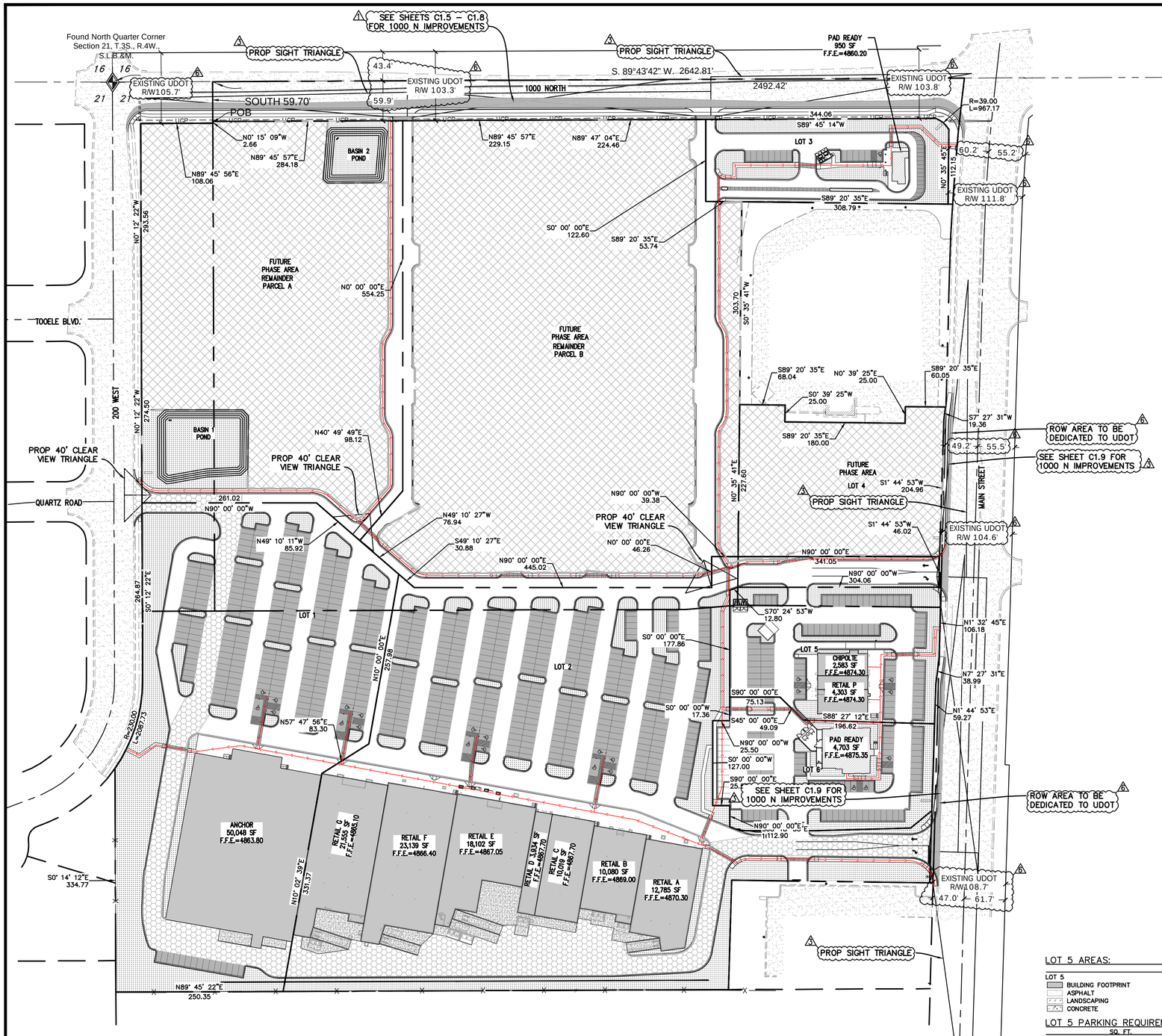

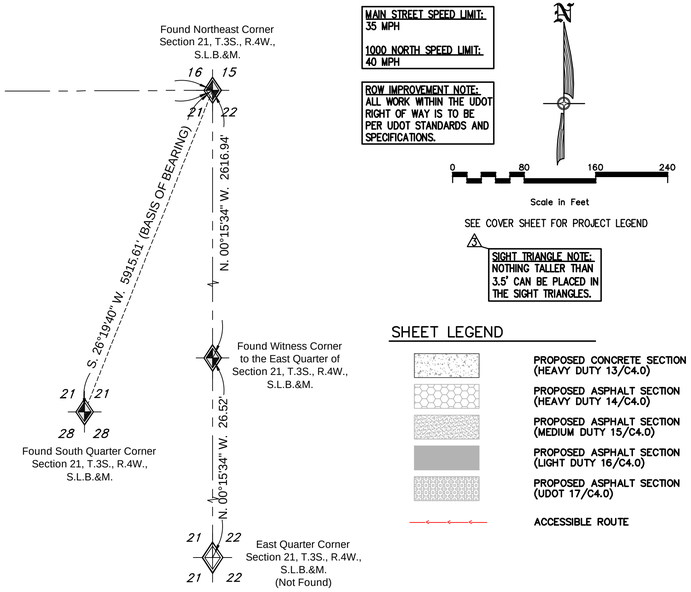

MAIN STREET SPEED LIMIT: 35 MPH

1000 NORTH SPEED LIMIT: 40 MPH

ROW IMPROVEMENT NOTE: ALL WORK WITHIN THE UDOT RIGHT OF WAY IS TO BE PER UDOT STANDARDS AND SPECIFICATIONS.

N

0 80 160 240

Scale in Feet

SEE COVER SHEET FOR PROJECT LEGEND

SIGHT TRIANGLE NOTE: NOTHING TALLER THAN 3.5' CAN BE PLACED IN THE SIGHT TRIANGLES.

SHEET LEGEND

- PROPOSED CONCRETE SECTION (HEAVY DUTY 13/C4.0)
- PROPOSED ASPHALT SECTION (HEAVY DUTY 14/C4.0)
- PROPOSED ASPHALT SECTION (MEDIUM DUTY 15/C4.0)
- PROPOSED ASPHALT SECTION (LIGHT DUTY 16/C4.0)
- PROPOSED ASPHALT SECTION (UDOT 17/C4.0)
- ACCESSIBLE ROUTE

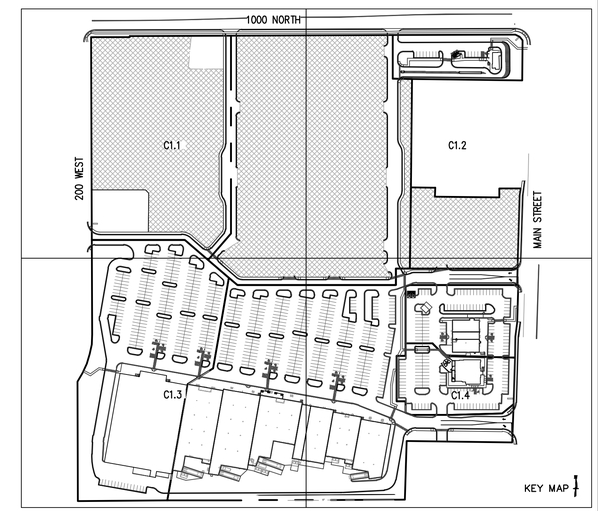

NO.	REVISIONS	BY	DATE
7	TRASH ENCLOSURE UPDATE	TLH	05/03/23
8	UDOT COMMENTS/SEWER UPDATE	TLH	06/02/23
9	BUILDING AND UTILITY CHANGES	TLH	07/28/23
10	BUILDING AND PARKING CHANGES	TLH	10/17/23
11	ENCLOSURE & INTERCEPTOR UPDATE	TLH	11/06/23
12	CHIPOTLE UPDATES	TLH	11/28/23

DESIGNER: TLH PROJECT ENGINEER: TLH

CIVIL ENGINEERING + SURVEYING
10718 S BECKSTEAD LANE, SUITE 102
South Jordan, Utah - 801-949-6296

TOOELE 10TH & MAIN

1000TH NORTH MAIN ST. TOOELE, UTAH 84074

OVERALL SITE PLAN

REMAINDER PARCEL A AREAS:

	SQ. FT. / ACRES
REMAINDER PARCEL A	226,342 SQ. FT. / 5.20 ACRES
ASPHALT	15,025 SQ. FT. / 0.34 ACRES
LANDSCAPING	27,392 SQ. FT. / 0.63 ACRES
CONCRETE	7,724 SQ. FT. / 0.18 ACRES
FUTURE PHASE AREA	176,201 SQ. FT. / 4.05 ACRES

REMAINDER PARCEL B AREAS:

	SQ. FT. / ACRES
REMAINDER PARCEL B	0 SQ. FT. / 0.00 ACRES
ASPHALT	37,760 SQ. FT. / 0.87 ACRES
CONCRETE	263,354 SQ. FT. / 6.05 ACRES
FUTURE PHASE AREA	301,113 SQ. FT. / 6.91 ACRES

LOT 1 AREAS:

	SQ. FT. / ACRES
LOT 1	233,059 SQ. FT. / 5.35 ACRES
BUILDING FOOTPRINT	50,048 SQ. FT. / 1.15 ACRES
ASPHALT	118,380 SQ. FT. / 2.72 ACRES
LANDSCAPING	51,511 SQ. FT. / 1.18 ACRES
CONCRETE	13,121 SQ. FT. / 0.30 ACRES

LOT 1 PARKING REQUIREMENTS:

	SQ. FT.	CITY REQM'T
RETAIL	50,048 SQ. FT.	166.83 (1/300)
TOTAL REQUIRED:		167 (166.83)
TOTAL PROVIDED:		251
ACCESSIBLE SPACES		8 (7 REQ'D 201 TO 300)
BICYCLE SPACES		16 (16 REQ'D 8% OF 251 MAX 16)

LOT 2 AREAS:

	SQ. FT. / ACRES
LOT 2	391,278 SQ. FT. / 8.98 ACRES
BUILDING FOOTPRINT	99,648 SQ. FT. / 2.29 ACRES
ASPHALT	191,700 SQ. FT. / 4.40 ACRES
LANDSCAPING	52,439 SQ. FT. / 1.20 ACRES
CONCRETE	47,492 SQ. FT. / 1.09 ACRES

LOT 2 PARKING REQUIREMENTS:

	SQ. FT.	CITY REQM'T
RETAIL	99,648 SQ. FT.	332.16 (1/300)
TOTAL REQUIRED:		342 (341.68)
TOTAL PROVIDED:		343
ACCESSIBLE SPACES		8 (8 REQ'D 301 TO 400)
BICYCLE SPACES		16 (16 REQ'D 8% OF 343 MAX 16)

LOT 3 AREAS:

	SQ. FT. / ACRES
LOT 3	45,441 SQ. FT. / 1.04 ACRES
PAD READY FOOTPRINT	950 SQ. FT. / 0.02 ACRES
ASPHALT	20,400 SQ. FT. / 0.47 ACRES
LANDSCAPING	17,125 SQ. FT. / 0.39 ACRES
CONCRETE	6,966 SQ. FT. / 0.16 ACRES

LOT 3 PARKING REQUIREMENTS:

	SQ. FT.	CITY REQM'T
RESTAURANT	950 SQ. FT.	9.50 (1/100)
TOTAL REQUIRED:		10 (9.50)
TOTAL PROVIDED:		17
ACCESSIBLE SPACES		1 (1 REQ'D 1 TO 25)
BICYCLE SPACES		4 (1.36 REQ'D 8% OF 17 MAX 16)

LOT 4 AREAS:

	SQ. FT. / ACRES
LOT 4	64,158 SQ. FT. / 1.47 ACRES
UNDEVELOPED	63,565 SQ. FT. / 1.46 ACRES
ASPHALT	200 SQ. FT. / 0.00 ACRES
CONCRETE	392 SQ. FT. / 0.01 ACRES

LOT 5 AREAS:

	SQ. FT. / ACRES
LOT 5	59,276 SQ. FT. / 1.36 ACRES
BUILDING FOOTPRINT	6,886 SQ. FT. / 0.16 ACRES
ASPHALT	31,365 SQ. FT. / 0.72 ACRES
LANDSCAPING	11,915 SQ. FT. / 0.27 ACRES
CONCRETE	9,110 SQ. FT. / 0.21 ACRES

LOT 5 PARKING REQUIREMENTS:

	SQ. FT.	CITY REQM'T
RETAIL	4,303 SQ. FT.	14.34 (1/300)
RESTAURANT	2,583 SQ. FT.	25.83 (1/100)
TOTAL REQUIRED:		38 (37.06)
TOTAL PROVIDED:		79
ACCESSIBLE SPACES		4 (4 REQ'D 83 TO 100)
BICYCLE SPACES		8 (6.32 REQ'D 8% OF 79 MAX 16)

LOT 6 AREAS:

	SQ. FT. / ACRES
LOT 6	55,387 SQ. FT. / 1.27 ACRES
PAD READY FOOTPRINT	4,703 SQ. FT. / 0.11 ACRES
ASPHALT	32,459 SQ. FT. / 0.75 ACRES
LANDSCAPING	11,688 SQ. FT. / 0.27 ACRES
CONCRETE	6,536 SQ. FT. / 0.15 ACRES

LOT 6 PARKING REQUIREMENTS:

	SQ. FT.	CITY REQM'T
RESTAURANT	4,703 SQ. FT.	47.03 (1/100)
TOTAL REQUIRED:		48 (47.03)
TOTAL PROVIDED:		84
ACCESSIBLE SPACES		3 (3 REQ'D 51 TO 75)
BICYCLE SPACES		8 (6.72 REQ'D 8% OF 84 MAX 16)

PROFESSIONAL ENGINEER No. 12072623 TREVOR L HODGSON STATE OF UTAH

Blue Stakes of UTAH811 Blustakes.org

SHEET NO. C1.0

PROJECT ID	DATE:
K1013-01	05/25/22
FILE NAME: PRJ-KTT	SCALE: 1"=80'

LANDLORD SHALL KEEP ALL EXISTING EROSION AND SEDIMENT CONTROL MEASURES IN PLACE UNTIL FINAL SITE STABILIZATION IS ACHEVED FOR THE DEVELOPMENT

LANDLORD SHALL REFERENCE THE CO02 FOR PIPE SPECS ON THE PROPOSED WATER LINES AND SANITARY SEWER LINES.

LANDLORD SHALL CAP AND MARK ALL UTILITY STUBS FOR CHILI'S FUTURE CONNECTION

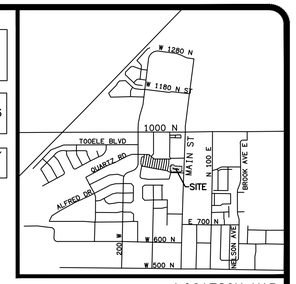

LOCATION MAP
N. T. S.

ANY PERIMETER LANDSCAPING REQUIREMENT TO BE SATISFIED BY LANDLORD

ELECTRICAL PRIMARY AND TRANSFORMER NOTE

PRIMARY SERVICE SHOWN HERE FOR INFORMATIONAL PURPOSES. SHOULD THE ELECTRICAL PRIMARY SERVICE BE ROUTED DIFFERENTLY THAN WHAT'S SHOWN HERE, LANDLORD SHALL ENSURE THAT CONDUITS AND WIRE DO NOT CONFLICT WITH THE INFRASTRUCTURE TO BE PROPOSED BY CHILI'S (PAD AND BUILDING SHOWN SHADED FOR REFERENCE).

LANDLORD SHALL USE EXTREME CAUTION WHILE WORKING UNDERNEATH OVER-HEAD POWER LINES. ANY DAMAGE TO THE EXISTING UTILITY POLES AND UTILITY LINES SHALL BE REPAIRED/REPLACED AT THE CONTRACTOR'S EXPENSE

PAD PREPARATION NOTE:

LANDLORD SHALL PREPARE THE PROPOSED LOCATION OF TENANT'S BUILDING AND SERVICE YARD AREA, INCLUDING THE SOIL COMPACTION AND GRADING, IN ACCORDANCE WITH THE RECOMMENDATIONS SET FORTH IN THE SOILS REPORT PROVIDED BY AGEC ON MARCH, 4 2019. LANDLORD IS RESPONSIBLE FOR BACKFILLING ALL EXCAVATIONS WITH SUITABLE MATERIALS COMPACTED IN ACCORDANCE WITH THE SITEWORK SPECIFICATIONS & GEOTECHNICAL REPORT PROVIDED BY AGEC ON MARCH, 4 2019. LANDLORD RESPONSIBLE TO PROVIDE APPROPRIATE EROSION CONTROL MEASURES ON DELIVERED SITE.

LEGEND

LL PROPOSED ITEM	DESCRIPTION
590	CONTOUR
RD	STORM PIPE
W — W	WATER LINE
6"SS	SANITARY SEWER LINE
UGP	ELECTRICAL LINE
G — G	GAS LINE
T — T	TELECOMMUNICATION LINE
+ 139.2	ROUGH GRADE SPOT ELEVATION
	WATER METER
	GATE VALVE
	FIRE HYDRANT
	UTILITY STUB FOR FUTURE CONNECTION
	EXISTING STORM STRCUTURE
	LANDLORD "PHASE 1" PAVING. REFERENCE LANDLORD PLANS
	LANDLORD "PHASE 2" SCOPE. REFERENCE LANDLORD PLANS

LANDLORD DELIVERY PLAN

SCALE 1" = 20'

EVERY DIGGING JOB REQUIRES A CALL – EVEN SMALL PROJECTS LIKE PLANTING TREES OR SHRUBS. IF YOU HIT AN UNDERGROUND UTILITY LINE WHILE DIGGING, YOU CAN HARM YOURSELF OR THOSE AROUND YOU, DISRUPT SERVICE TO AN ENTIRE NEIGHBORHOOD AND POTENTIALLY BE RESPONSIBLE FOR FINES AND REPAIR COSTS.

SMART DIGGING MEANS CALLING 811 BEFORE EACH JOB, WHETHER YOU ARE A HOMEOWNER OR A PROFESSIONAL EXCAVATOR. ONE CALL TO 811 GETS YOUR UNDERGROUND UTILITY LINES MARKED FOR FREE.

REVISIONS	BY

FREELAND and KAUFFMAN, INC.
Engineers * Landscape Architects
209 West Stone Avenue
Greenville, South Carolina 29609
864-233-5497
fax 864-233-8915

PROFESSIONAL ENGINEER No.13889119-2202 TODD BURNETT STATE OF UTAH
09/12/2024

CHILI'S GRILL & BAR
951 N MAIN STREET
TOOELE, UT 84074
BRINKER INTERNATIONAL
3000 OLYMPUS BLVD
DALLAS, TX 75019

DRAWN	JMD
CHECKED	TMB
DATE	09/12/2024
SCALE	AS SHOWN
DRAWING	C090

ISSUED FOR BID SEPTEMBER 12, 2024

NOTES:

1. ALL DIMENSIONS UNLESS OTHERWISE NOTED, ARE EDGE OF SIDEWALK, FACE OF BUILDING, OR BACK OF CURB.
2. THE CONTRACTOR SHALL REFER TO THE ARCHITECTURAL PLANS FOR EXACT LOCATIONS AND DIMENSIONS OF THE ENTRANCES, PORCHES, SLOPED SIDEWALK, RAMPS, SERVICE YARD, PRECISE BUILDING DIMENSIONS, AND EXACT UTILITY ENTRANCE POINTS.
3. ALL CURB & SIDEWALK TRANSITIONS LESS THAN 6" IN HEIGHT SHALL BE PAINTED TRAFFIC YELLOW.
4. ALL STRIPING SHALL BE 4" WIDE, SOLID WHITE UNLESS NOTED OTHERWISE

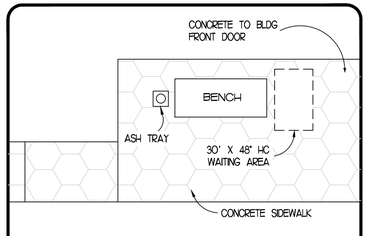

30 X 48 HC WAITING AREA DETAIL

PAINTING STRIPING LEGEND

SWSL/4" - SINGLE WHITE SOLID LINE / 4" WIDE

SWSL/8" - SINGLE WHITE SOLID LINE / 8" WIDE

THE PROPOSED DEVELOPMENT IS A FULL SERVICE RESTAURANT FOR THE SALE OF FOOD AND BEVERAGES (ALCOHOL INCLUDED)

NO HAZARDOUS MATERIALS WILL BE STORED ON SITE

CHILI'S SITE DATA

PARCEL AREA	1.27 ACRES
TOTAL SITE AREA	1.27 ACRES
TOTAL SEATING	208 SEATS
BUILDING AREA	5,161 SF
ZONING	GC - GENERAL COMMERCIAL
USAGE	FULL SERVICE RESTAURANT
PID	02-004-0-0063
SETBACK LINES	FRONT: 30' SIDE: NONE REAR: NONE

FLOOD INFORMATION

FLOOD ZONE "X" (MINIMAL FLOOD HAZARD) PER FEMA MAP 49045C0645C EFFECTIVE DATE 11/18/2009

LEGEND

PROPOSED	DESCRIPTION
(12)	NUMBER OF SPACES PER ROW
♿	HANDICAP SYMBOL
	SIGN
	FULL DEPTH SAWCUT
	LIMITS OF DISTURBANCE
	DUMPSTER PAD & APPROACH CONCRETE PAVEMENT
	CONCRETE SIDEWALK
	STRIPING

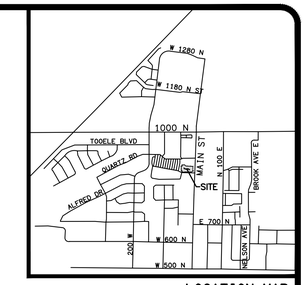

LOCATION MAP
N. T. S.

KEYNOTES:

1. PROPOSED SERVICE YARD - SEE ARCHITECT DWG
2. PROPOSED TOGO DOOR - SEE ARCHITECT DWG
3. PROPOSED DELIVERY DOOR - SEE ARCHITECT DWG
4. PROPOSED MAIN DOOR - SEE ARCHITECT DWG
5. PROPOSED INTEGRAL SIDEWALK (SEE PLAN FOR WIDTH) - SEE DETAILS 3/C501 & 6/C501
6. PROPOSED 30" X 48" ADA AREA
7. PROPOSED TOGO SIGN - SEE DETAIL 7/C502 & 4/C502
8. BIKE RACKS - SEE DETAIL 13/C501
9. BENCH & ASH TRAY - SEE ARCHITECT DWG
10. SAWCUT EXISTING ASPHALT AS NECESSARY FOR DUMPSTER ENCLOSURE CONCRETE APPROACH. MATCH EXISTING GRADES
11. PROPOSED SIDEWALK FLUSH WITH ASPHALT PAVEMENT (SEE PLAN FOR WIDTH) - SEE DETAIL 3/C501 & 6/C501
12. PROPOSED SIDEWALK RAMP - SEE DETAIL 12/C501
13. CONCRETE APPROACH APRON FOR DUMPSTER SERVICE YARD - SEE DETAIL 7/C501 & 1/C501
14. HEAVY DUTY CONCRETE
15. DUMPSTER - SEE ARCHITECT DWG FOR DETAILS
16. EXPANSION JOINT - SEE DETAIL 3/C501 & 1/C501
17. SAWED JOINT - SEE DETAIL 3/C501 & 1/C501
18. PAVEMENT TRANSITION - SEE DETAIL 7/C501
19. NOT USED
20. PROPOSED HC SIGN IN BOLLARD - SEE DETAILS 6/C502 & 9/C502
21. 12" CONCRETE APRON ALONG BLDG FOOTPRINT (SEE DETAIL 10/C501)
22. PROPOSED CONCRETE SIDEWALK - SEE PLAN FOR WIDTH - SEE DETAIL 3/C501
23. HANDICAP STRIPING
24. CONNECT TO EXISTING SIDEWALK. ENSURE SMOOTH TRANSITION

PROPERTY ACREAGE SUMMARY (IN ACRES)	
TOTAL PARCEL(S) AREA	1.27
ON-SITE DISTURBED AREA	0.27
OFF-SITE DISTURBED AREA	0.00
TOTAL DISTURBED AREA CHILI'S DEVELOPMENT ONLY	0.27
PERVIOUS AREA (POST-CONSTRUCTION) ON SITE ONLY	0.07
IMPERVIOUS AREA (POST-CONSTRUCTION) ON SITE ONLY	1.20

EVERY DIGGING JOB REQUIRES A CALL – EVEN SMALL PROJECTS LIKE PLANTING TREES OR SHRUBS. IF YOU HIT AN UNDERGROUND UTILITY LINE WHILE DIGGING, YOU CAN HARM YOURSELF OR THOSE AROUND YOU, DISRUPT SERVICE TO AN ENTIRE NEIGHBORHOOD AND POTENTIALLY BE RESPONSIBLE FOR FINES AND REPAIR COSTS.

SMART DIGGING MEANS CALLING 811 BEFORE EACH JOB, WHETHER YOU ARE A HOMEOWNER OR A PROFESSIONAL EXCAVATOR, ONE CALL TO 811 GETS YOUR UNDERGROUND UTILITY LINES MARKED FOR FREE.

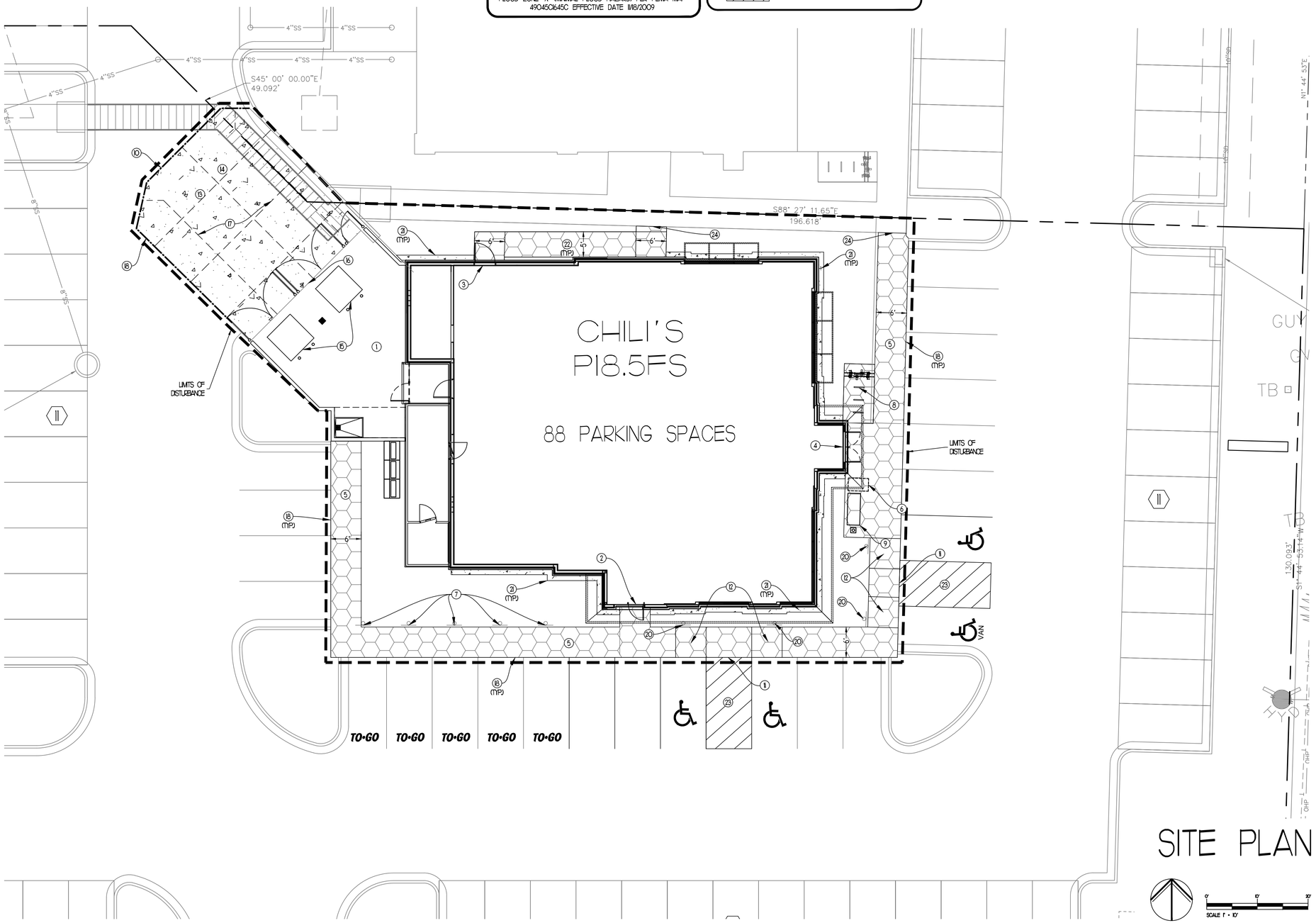

SITE PLAN

REVISIONS	BY

FREELAND and KAUFFMAN, INC.
Engineers * Landscape Architects
209 West Stone Avenue
Greenville, South Carolina 29609
864-233-5497
fax 864-233-8915

PROFESSIONAL ENGINEER No.13889119-2202 TODD BURNETT STATE OF UTAH

09/12/2024

CHILI'S GRILL & BAR
951 N MAIN STREET
TOOELE, UT 84074

BRINKER INTERNATIONAL
3000 OLYMPUS BLVD
DALLAS, TX 75019

DRAWN	JMD
CHECKED	TMB
DATE	09/12/2024
SCALE	AS SHOWN
DRAWING	C101

ISSUED FOR BID SEPTEMBER 12, 2024

PROPERTY ACREAGE SUMMARY (IN ACRES)	
TOTAL PARCEL(S) AREA	1.27
ON-SITE DISTURBED AREA	0.27
OFF-SITE DISTURBED AREA	0.00
TOTAL DISTURBED AREA CHILI'S DEVELOPMENT ONLY	0.27
PERVIOUS AREA (POST-CONSTRUCTION) ON SITE ONLY	0.07
IMPERVIOUS AREA (POST-CONSTRUCTION) ON SITE ONLY	1.20

RE: ROOF DRAIN CONNECTION	4/C611
CLEANOUT DETAIL	5/C611
YARD INLET	3/C611

NOTE:
FOR ALL STORM DRAIN PIPE MATERIALS AND SPECIFICATIONS - REFERENCE PLAN SHEET C002

SEE STORM PLAN (C200) FOR STORM SEWER DESIGN INFORMATION

DEWATERING NOTE:

WHEN PERFORMING GRADING OPERATIONS DURING PERIODS OF WET WEATHER, PROVIDE ADEQUATE DEWATERING, DRAINAGE AND GROUND WATER MANAGEMENT TO CONTROL MOISTURE OF SOILS. REFER TO MASTER SITE SPECIFICATIONS.

LEGEND

PROPOSED	DESCRIPTION
	HANDICAP SYMBOL
	SIGN
	STRIPING
	LIMITS OF DISTURBANCE

EXISTING	PROPOSED	DESCRIPTION
665	665	CONTOURS
RD		STORM DRAIN
		STORM INLETS
	6626	SPOT ELEVATION
	TC=6626 BC=6621	TC= TOP OF CURB ELEV. BC= BOTTOM OF CURB ELEV.
E.G. 6621	M.E.G. 6621	EXISTING GRADE/ MATCH EXISTING GRADE

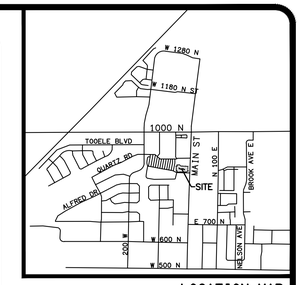

LOCATION MAP
N. T. S.

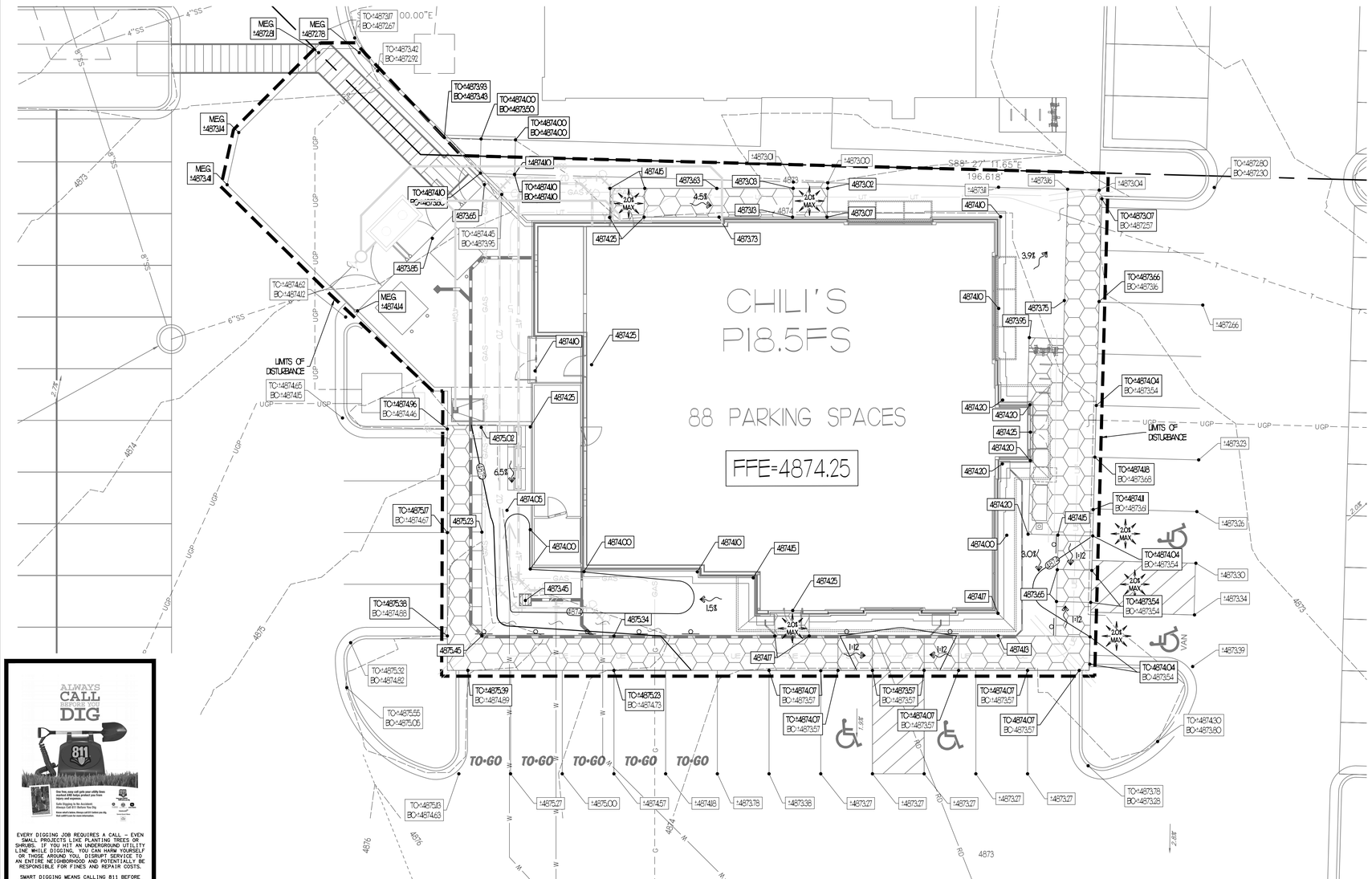

GRADING NOTES

1. THE CONTRACTOR IS SPECIFICALLY CAUTIONED THAT THE LOCATION AND/OR ELEVATION OF EXISTING UTILITIES AS SHOWN ON THESE PLANS IS BASED ON RECORDS OF THE VARIOUS UTILITY COMPANIES, AND WHERE POSSIBLE, MEASUREMENTS TAKEN IN THE FIELD. THE INFORMATION IS NOT TO BE RELIED ON AS BEING EXACT OR COMPLETE. THE CONTRACTOR MUST CALL THE APPROPRIATE UTILITY COMPANIES AT LEAST 72 HOURS BEFORE ANY EXCAVATION TO REQUEST EXACT FIELD LOCATION OF UTILITIES. IT SHALL BE THE RESPONSIBILITY OF THE CONTRACTOR TO RELOCATE ALL EXISTING UTILITIES WHICH CONFLICT WITH THE PROPOSED IMPROVEMENTS SHOWN ON THE PLANS.
2. ALL CUT OR FILL SLOPES SHALL BE 3:1 OR FLATTER UNLESS OTHERWISE NOTED.
3. PRECAST STRUCTURES MAY BE USED AT CONTRACTORS OPTION.
4. EXISTING PIPES TO BE CLEANED OUT TO REMOVE ALL SILT AND DEBRIS.
5. PIPE LENGTHS ARE BASED ON HORIZONTAL DISTANCE FROM CENTER OF STRUCTURE TO CENTER OF STRUCTURE AND USED FOR DESIGN ONLY. CONTRACTOR TO FIELD VERIFY ACTUAL PIPE LENGTHS NEEDED FOR CONSTRUCTION.
6. EXISTING GRADE CONTOUR INTERVALS SHOWN AT 1 FEET.
7. PROPOSED GRADE CONTOUR INTERVALS SHOWN AT 1 FOOT.
8. IF ANY EXISTING STRUCTURES TO REMAIN ARE DAMAGED DURING CONSTRUCTION IT SHALL BE THE CONTRACTORS RESPONSIBILITY TO REPAIR AND/OR REPLACE THE EXISTING STRUCTURE AS NECESSARY TO RETURN IT TO EXISTING CONDITIONS OR BETTER.
9. ALL STORM PIPE ENTERING STRUCTURES SHALL BE GROUTED TO ASSURE CONNECTION AT STRUCTURE IS WATERTIGHT.
10. ALL STORM SEWER MANHOLES IN PAVED AREAS SHALL BE FLUSH WITH PAVEMENT, AND SHALL HAVE TRAFFIC BEARING RING & COVERS. MANHOLES IN UNPAVED AREAS SHALL BE 6" ABOVE FINISH GRADE. LIDS SHALL BE LABELED "STORM SEWER".
11. THE CONTRACTOR SHALL ADHERE TO ALL TERMS & CONDITIONS AS OUTLINED IN THE EPA OR APPLICABLE STATE GENERAL NPDES. PERMIT FOR STORM WATER DISCHARGE ASSOCIATED WITH CONSTRUCTION ACTIVITIES.
12. CONTRACTOR SHALL ADJUST AND/OR CUT EXISTING PAVEMENT AS NECESSARY TO ASSURE A SMOOTH FIT AND CONTINUOUS GRADE.
13. CONTRACTOR SHALL ASSURE POSITIVE DRAINAGE AWAY FROM BUILDINGS FOR ALL NATURAL AND PAVED AREAS, 1% MIN. SLOPE.
14. TOPOGRAPHIC INFORMATION IS TAKEN FROM A TOPOGRAPHIC SURVEY BY OIR ENGINEERING IF THE CONTRACTOR DOES NOT ACCEPT EXISTING TOPOGRAPHY AS SHOWN ON THE PLANS, WITHOUT EXCEPTION, THEN THE CONTRACTOR SHALL SUPPLY, AT THEIR EXPENSE, A TOPOGRAPHIC SURVEY BY A REGISTERED LAND SURVEYOR TO THE OWNER FOR REVIEW.
15. ALL UNSURFACED AREAS DISTURBED BY GRADING OPERATIONS SHALL RECEIVE 4 INCHES OF TOPSOIL. ALL SLOPES 3:1 AND STEEPER SHALL RECEIVE AN EROSION CONTROL BLANKET (CURLEX OR APPROVED EQUAL). CONTRACTOR SHALL STABILIZE DISTURBED AREAS IN ACCORDANCE WITH GOVERNING SPECIFICATIONS UNTIL A HEALTHY STAND OF VEGETATION IS OBTAINED.
16. CONSTRUCTION SHALL COMPLY WITH ALL APPLICABLE GOVERNING CODES AND BE CONSTRUCTED TO SAME.
17. ALL STORM STRUCTURES SHALL HAVE A SMOOTH UNIFORM POURED MORTAR INVERT FROM INVERT IN TO INVERT OUT.
18. ALL ASPECTS OF THE STORMWATER/DRAINAGE COMPONENTS AND/OR TRANSPORTATION COMPONENTS SHALL BE COMPLETED PRIOR TO ISSUANCE OF A FINAL CERTIFICATE OF OCCUPANCY.
19. NO DEVIATIONS OR REVISIONS FROM THESE PLANS BY THE CONTRACTOR SHALL BE ALLOWED WITHOUT PRIOR APPROVAL FROM BOTH THE DESIGN ENGINEER AND TOOELE CITY. ANY DEVIATIONS MAY RESULT IN DELAYS IN OBTAINING A CERTIFICATE OF OCCUPANCY.
20. CONTRACTOR SHALL MAINTAIN RECORD DRAWINGS DURING CONSTRUCTION WHICH SHOW "AS-BUILT" CONDITIONS OF ALL WORK INCLUDING PIPING, DRAINAGE STRUCTURES, TOPO (IF PONDS), OUTLET STRUCTURES, DIMENSIONS, ELEVATIONS, GRADING, ETC. RECORD DRAWINGS SHALL BE PROVIDED TO THE ENGINEER BY A REGISTERED SURVEYOR OF RECORD PRIOR TO REQUESTING FINAL INSPECTION.
21. THE OWNER OR HIS AGENT SHALL ARRANGE/SCHEDULE WITH TOOELE CITY A FINAL INSPECTION OF THE DEVELOPMENT UPON COMPLETION AND ANY INTERMEDIATE INSPECTIONS. AS BUILT CERTIFICATION IS REQUIRED PRIOR TO REQUEST FOR FINAL INSPECTION/APPROVAL.
22. NOTIFY UTILITIES 48 HOURS IN ADVANCE PRIOR TO DIGGING WITHIN R/W.
23. ANY DAMAGE TO EXISTING ROADS DURING CONSTRUCTION WILL BE REPAIRED BY THE DEVELOPER PRIOR TO FINAL "AS-BUILT" SIGN OFF FROM TOOELE CITY.
24. ALL STEPS IN DRAINAGE STRUCTURES SHALL LINE UP WITH STRUCTURE CASTING TO ENSURE ACCESSIBILITY.
25. ALL PROPOSED DRAINAGE STRUCTURES ARE SHOWN FOR REFERENCE PURPOSED ONLY. CONTRACTOR IS RESPONSIBLE FOR ACCURATE LOCATION OF THE STRUCTURE(S) SUCH THAT THE APPLICABLE CASTING IS CORRECTLY ALIGNED WITH THE SURFACE FEATURES AS DESIGNED.
26. CONTRACTOR SHALL OBTAIN UDEQ NOTICE OF COVERAGE APPROVAL AND/OR TOOELE CITY LAND DIST. PERMIT FOR ALL BORROW/SPOIL SITES.
27. CONTRACTOR SHALL ENSURE THAT THE SIDEWALK LONGITUDINAL SLOPE DOES NOT EXCEED 5% AND THAT THE CROSS SLOPE DOES NOT EXCEED 2%.

EVERY DIGGING JOB REQUIRES A CALL – EVEN SMALL PROJECTS LIKE PLANTING TREES OR SHRUBS. IF YOU HIT AN UNDERGROUND UTILITY LINE WHILE DIGGING, YOU CAN HARM YOURSELF OR THOSE AROUND YOU, DISRUPT SERVICE TO AN ENTIRE NEIGHBORHOOD AND POTENTIALLY BE RESPONSIBLE FOR FINES AND REPAIR COSTS.

SMART DIGGING MEANS CALLING 811 BEFORE EACH JOB. WHETHER YOU ARE A HOMEOWNER OR A PROFESSIONAL EXCAVATOR, ONE CALL TO 811 GETS YOUR UNDERGROUND UTILITY LINES MARKED FOR FREE.

GRADING PLAN

SCALE 1" = 10'

ISSUED FOR BID SEPTEMBER 12, 2024

REVISIONS	BY

FREELAND and KAUFFMAN, INC.
Engineers * Landscape Architects
209 West Stone Avenue
Greenville, South Carolina 29609
864-233-5497
fax 864-233-8915

PROFESSIONAL ENGINEER No.13889119-2202 TODD BURNETT STATE OF UTAH
09/12/2024

CHILI'S GRILL & BAR
951 N MAIN STREET
TOOELE, UT 84074
BRINKER INTERNATIONAL
3000 OLYMPUS BLVD
DALLAS, TX 75019

DRAWN	JMD
CHECKED	TMB
DATE	09/12/2024
SCALE	AS SHOWN
DRAWING	C102

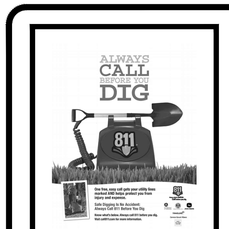

EVERY DIGGING JOB REQUIRES A CALL – EVEN SMALL PROJECTS LIKE PLANTING TREES OR SHRUBS. IF YOU HIT AN UNDERGROUND UTILITY LINE WHILE DIGGING, YOU CAN HARM YOURSELF OR THOSE AROUND YOU, DISRUPT SERVICE TO AN ENTIRE NEIGHBORHOOD AND POTENTIALLY BE RESPONSIBLE FOR FINES AND REPAIR COSTS.

SMART DIGGING MEANS CALLING 811 BEFORE EACH JOB, WHETHER YOU ARE A HOMEOWNER OR A PROFESSIONAL EXCAVATOR, ONE CALL TO 811 GETS YOUR UNDERGROUND UTILITY LINES MARKED FOR FREE.

PROPERTY ACREAGE SUMMARY (IN ACRES)	
TOTAL PARCEL(S) AREA	1.27
ON-SITE DISTURBED AREA	0.27
OFF-SITE DISTURBED AREA	0.00
TOTAL DISTURBED AREA CHILI'S DEVELOPMENT ONLY	0.27
PERVIOUS AREA (POST-CONSTRUCTION) ON SITE ONLY	0.07
IMPERVIOUS AREA (POST-CONSTRUCTION) ON SITE ONLY	1.20

UTILITY RESPONSIBILITIES:

FOR A LIST OF ALL CONTRACTOR UTILITY RESPONSIBILITIES, REF: SHEET C002

LEGEND

EXISTING	PROPOSED	DESCRIPTION
W	4"F	WATER LINE (FIRE)
W	2"W	WATER LINE (DOMESTIC)
UGP	UE	UNDERGROUND ELECTRIC LINE
T	UT	UNDERGROUND TELEPHONE LINE
OHE		OVERHEAD ELECTRIC LINE
6"SS	4" SS	SANITARY SEWER
G	GAS	GAS LINE
		SEWER MANHOLE
		SEWER CLEANOUT
		UTILITY POLE
		SITE LIGHTING
		LIMITS OF DISTURBANCE

UTILITY NOTES

1. ALL FILL MATERIAL IS TO BE IN PLACE AND COMPACTED BEFORE INSTALLATION OF UTILITIES.
2. ALL UTILITIES SHOULD BE KEPT 10 FEET APART (PARALLEL) OR WHEN CROSSING 18 INCH VERTICAL CLEARANCE (OUTSIDE EDGE OF PIPE TO OUTSIDE EDGE OF PIPE) UNLESS OTHERWISE NOTED.
3. IN THE EVENT OF A VERTICAL CONFLICT BETWEEN WATER LINES, SANITARY LINES, STORM DRAIN LINES AND GAS LINES (EXISTING AND PROPOSED): THE SANITARY LINE SHALL BE DUCTILE IRON PIPE WITH MECHANICAL JOINTS AT LEAST 10 FEET ON BOTH SIDES OF CROSSING. THE WATER LINE SHALL HAVE MECHANICAL JOINTS WITH APPROPRIATE THRUST BLOCKING AS REQUIRED TO PROVIDE A MINIMUM OF 18 INCHES CLEARANCE. ALL WORK SHALL MEET THE REQUIREMENTS OF ANSI A21.10 OR ANSI A21.11 (AWWA C-151/CLASS 50).
4. LINES UNDERGROUND SHALL BE INSTALLED, INSPECTED AND APPROVED PRIOR TO BACKFILLING.
5. ALL CONCRETE FOR ENCASEMENTS SHALL HAVE A MINIMUM 28-DAY COMPRESSIVE STRENGTH AT 3,000 PSI.
6. DRAWINGS DO NOT PURPORT TO SHOW ALL EXISTING UTILITIES.
7. EXISTING UTILITIES SHALL BE VERIFIED IN FIELD PRIOR TO INSTALLATION OF NEW LINES.
8. REFER TO INTERIOR PLUMBING DRAWINGS FOR TIE-IN OF ALL UTILITIES.
9. ALL NECESSARY INSPECTIONS AND/OR CERTIFICATIONS REQUIRED BY CODES AND/OR UTILITY SERVICE COMPANIES SHALL BE PERFORMED PRIOR TO ANNOUNCED BUILDING POSSESSION AND THE FINAL CONNECTION OF SERVICE.
10. THE CONTRACTOR IS SPECIFICALLY CAUTIONED THAT THE LOCATION AND/OR ELEVATION OF EXISTING UTILITIES AS SHOWN ON THESE PLANS IS BASED ON THE RECORDS OF THE VARIOUS UTILITY COMPANIES, AND, WHERE POSSIBLE, MEASUREMENTS TAKEN IN THE FIELD. THE INFORMATION IS NOT TO BE RELIED ON AS BEING EXACT OR COMPLETE. THE CONTRACTOR MUST CALL THE APPROPRIATE UTILITY COMPANIES AT LEAST 72 HOURS BEFORE ANY EXCAVATION TO REQUEST EXACT FIELD LOCATION OF UTILITIES. IT SHALL BE THE RESPONSIBILITY OF THE CONTRACTOR TO RELOCATE ALL EXISTING UTILITIES WHICH CONFLICT WITH THE PROPOSED IMPROVEMENTS SHOWN ON THE PLANS. NECESSARY PRECAUTIONS SHALL BE TAKEN BY THE CONTRACTOR TO PROTECT EXISTING SERVICES AND MAINS, AND ANY DAMAGE TO EXISTING UTILITIES SHALL BE REPAIRED IMMEDIATELY AT THE CONTRACTOR'S EXPENSE.
11. REFER TO THE BUILDING PLANS FOR EXACT UTILITY ENTRANCE LOCATIONS, AND FOR THE SITE LIGHTING ELECTRICAL LAYOUT.
12. THE CONTRACTOR SHALL INCLUDE IN HIS CONTRACT PRICE ALL MATERIAL AND LABOR ASSOCIATED WITH THE TESTING OF THE WATER AND SEWER LINES, AS REQUIRED.
13. THE CONTRACTOR SHALL INCLUDE IN THE BASE CONTRACT PRICE: DAILY RECORD KEEPING AND SURVEYING REQUIRED TO PREPARE THE AS-BUILT DRAWINGS OF THE WATER AND SEWER LINES. THE CONTRACTOR IS RESPONSIBLE FOR PROVIDING A STAMPED AS-BUILT SURVEY OF THE WATER AND SEWER LINES TO THE OWNER AND ENGINEER ALONG WITH CERTIFIED TEST RESULTS.
14. ALL SLEEVES FOR IRRIGATION LINES SHALL BE 4" DIAMETER SCHEDULE 40 PVC PIPE.

KEYNOTES

- (A) CONNECT TO LANDLORD PROVIDED WATER LINE. PROPOSED 4" LINE FOR FIRE SUPPRESSION SYSTEM
- (B) CONTRACTOR SHALL TRENCH & INSTALL (2)-2" PVC CONDUIT AND PULL WIRE FROM BUILDING EQUIPMENT ROOM TO LANDLORD PROVIDED STUB FOR UG TELEPHONE SERVICE.
- (C) EXISTING TRANSFORMER LOCATION FOR CHILI'S PROVIDED BY LANDLORD AND PER ROCKY MOUNTAIN POWER STANDARDS AND REQUIREMENTS.
- (D) IF IRRIGATION WATER LINE CONNECTION TO LANDLORD PROVIDED STUB PER CITY OF TOOELE STANDARDS & SPECS. REFERENCE IRRIGATION PLANS FOR AREAS TO BE IRRIGATED.
- (E) 4" WATER LINE FOR FIRE SERVICE - SEE C002 FOR PIPE SPECS
- (F) (2)-4" PVC IRRIGATION SLEEVES
- (G) 6" SANITARY SEWER POINT OF CONNECTION - CONNECT TO LANDLORD PROVIDED STUB
- (H) 4" GREASE WASTE (MIN. 2.0% SLOPE) AND EXIT FROM BLDG - SEE C002 FOR PIPE SPECS AND PLAN FOR INVERT
- (I) 4" SANITARY SEWER (MIN. 2.0% SLOPE) AND EXIT FROM BLDG - SEE C002 FOR PIPE SPECS AND PLAN FOR INVERT
- (J) GREASE TRAP - REF: MPE 101 FOR SIZING
- (K) 4" X 4" X 4" SANITARY SEWER WYE CONNECTION W/ CLEANOUT - SEE DETAIL 2/C602
- (L) 45° WATERLINE BEND W/ THRUST BLOCK - SEE DETAIL 1/C602
- (M) ELECTRICAL SECONDARY SERVICE WIRE AND CONDUITS BY CHILI'S CONTRACTOR SEE CONTRACTOR NOTES FOR ELECTRIC INSTALLATION ON THIS SHEET
- (N) PROPOSED MAIN PANEL (REF: MPE) (REF: E200)
- (O) FIRE DEPARTMENT CONNECTION PER CITY OF TOOELE STANDARDS AND REQUIREMENTS
- (P) 2" WATER LINE FOR DOMESTIC WATER SERVICE - SEE C002 FOR CHILI'S PIPE SPECS
- (Q) SAMPLING WELL - SEE ARCHITECT DRAWINGS
- (R) 4" WATER LINE ENTRY (REF: ARCH)
- (S) TELEPHONE & CABLE ENTRY - SEE MPE FOR CONTINUATION INTO BUILDING
- (T) GAS SERVICE LINE FROM LANDLORD PROVIDED STUB TO BUILDING
- (U) GAS METER AND BUILDING ENTRY - SEE MPE FOR CONTINUATION INTO BUILDING. DOMINION ENERGY WILL INSTALL METER, GC SHALL INSTALL SERVICE TO BUILDING FROM METER.
- (V) 4" DRAIN UNDER GREASE BIN TO SANITARY SEWER (REF: MPE)
- (W) CONNECT TO LANDLORD PROVIDED GAS STUB
- (X) ELECTRICAL ENTRY TO METER AND CT CABINET
- (Y) CONNECT TO LANDLORD PROVIDED 2" WATER LINE FOR DOMESTIC SERVICE
- (Z) TELEPHONE & CABLE POINT OF CONNECTION FROM LANDLORD PROVIDED STUB TO BUILDING
- (AA) 2" DOMESTIC WATER LINE ENTRY TO BUILDING (REF: ARCH)
- (BB) CLEANOUT - SEE DETAIL 2/C602
- (CC) CONNECT TO LANDLORD PROVIDED ELECTRICAL STUB
- (DD) CONNECT TO LANDLORD PROVIDED IRRIGATION STUB
- (EE) (2)-2" CONDUITS FROM PANEL TO LL STUB FOR POWER TO SIGN.
- (FF) 6" TO 4" REDUCER FOR SANITARY SEWER PIPE

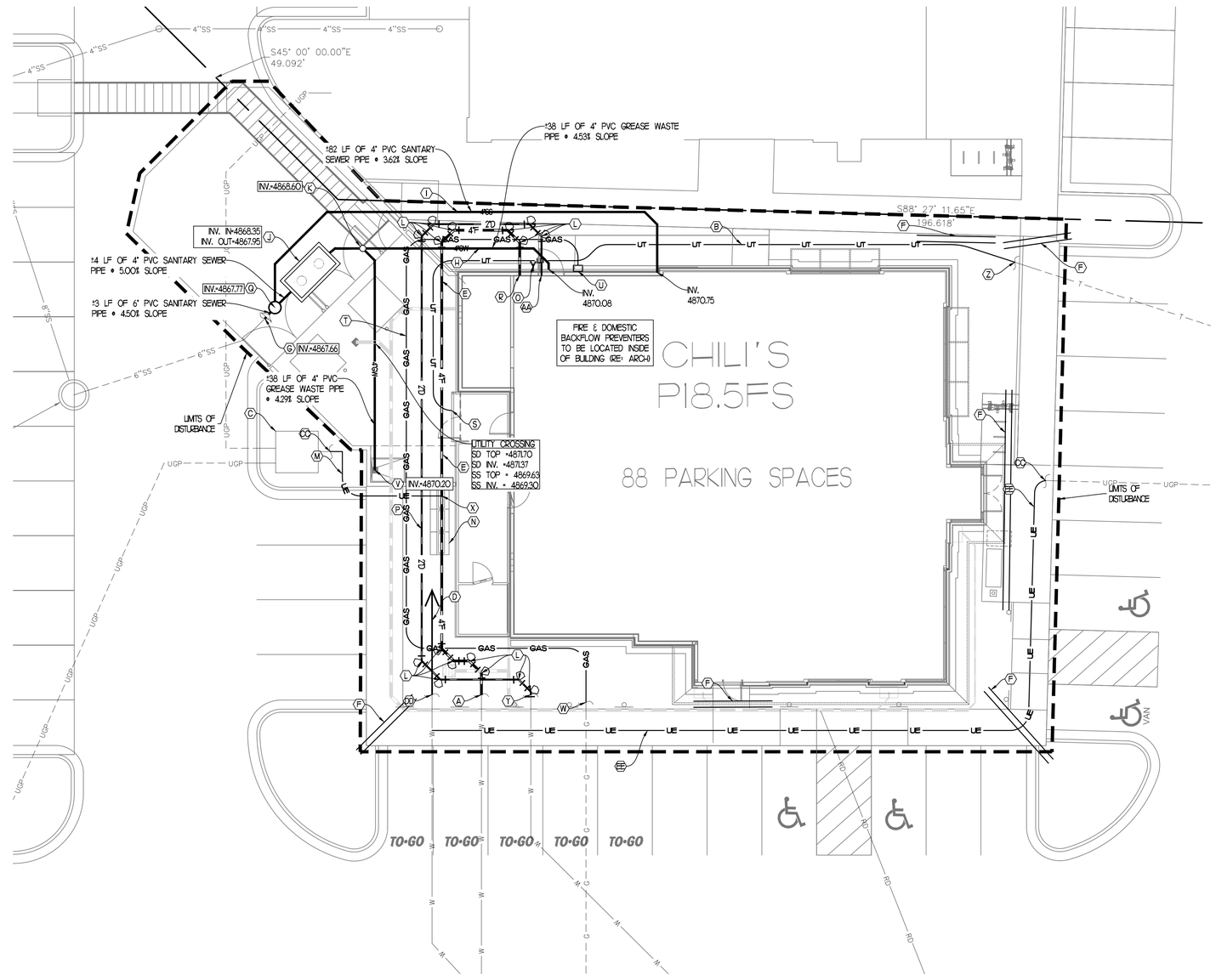

UTILITY PLAN

SCALE 1" = 10'

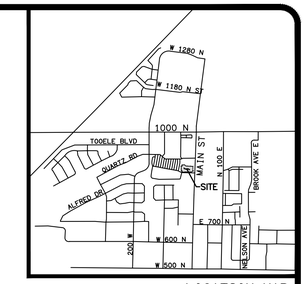

LOCATION MAP
N. T. S.

REVISIONS	BY

FREELAND and KAUFFMAN, INC.
Engineers * Landscape Architects
209 West Stone Avenue
Greenville, South Carolina 29609
864-233-5497
fax 864-233-8915

PROFESSIONAL ENGINEER No.13889119-2202 TODD BURNETT STATE OF UTAH
09/12/2024

CHILI'S GRILL & BAR
951 N MAIN STREET
TOOELE, UT 84074
BRINKER INTERNATIONAL
3000 OLYMPUS BLVD
DALLAS, TX 75019

DRAWN	JMD
CHECKED	TMB
DATE	09/12/2024
SCALE	AS SHOWN
DRAWING	C103

ISSUED FOR BID SEPTEMBER 12, 2024

PROPERTY ACREAGE SUMMARY (IN ACRES)	
TOTAL PARCEL(S) AREA	1.27
ON-SITE DISTURBED AREA	0.27
OFF-SITE DISTURBED AREA	0.00
TOTAL DISTURBED AREA CHILI'S DEVELOPMENT ONLY	0.27
PERVIOUS AREA (POST-CONSTRUCTION) ON SITE ONLY	0.07
IMPERVIOUS AREA (POST-CONSTRUCTION) ON SITE ONLY	1.20

RE: ROOF DRAIN CONNECTION 4/C6.11
CLEANOUT DETAIL 5/C6.11
YARD INLET 3/C6.11

NOTE:
FOR ALL STORM DRAIN PIPE MATERIALS AND SPECIFICATIONS - REFERENCE PLAN SHEET C002

SEE STORM PLAN (C200) FOR STORM SEWER DESIGN INFORMATION

DEWATERING NOTE:

WHEN PERFORMING GRADING OPERATIONS DURING PERIODS OF WET WEATHER, PROVIDE ADEQUATE DEWATERING, DRAINAGE AND GROUND WATER MANAGEMENT TO CONTROL MOISTURE OF SOILS. REFER TO MASTER SITE SPECIFICATIONS.

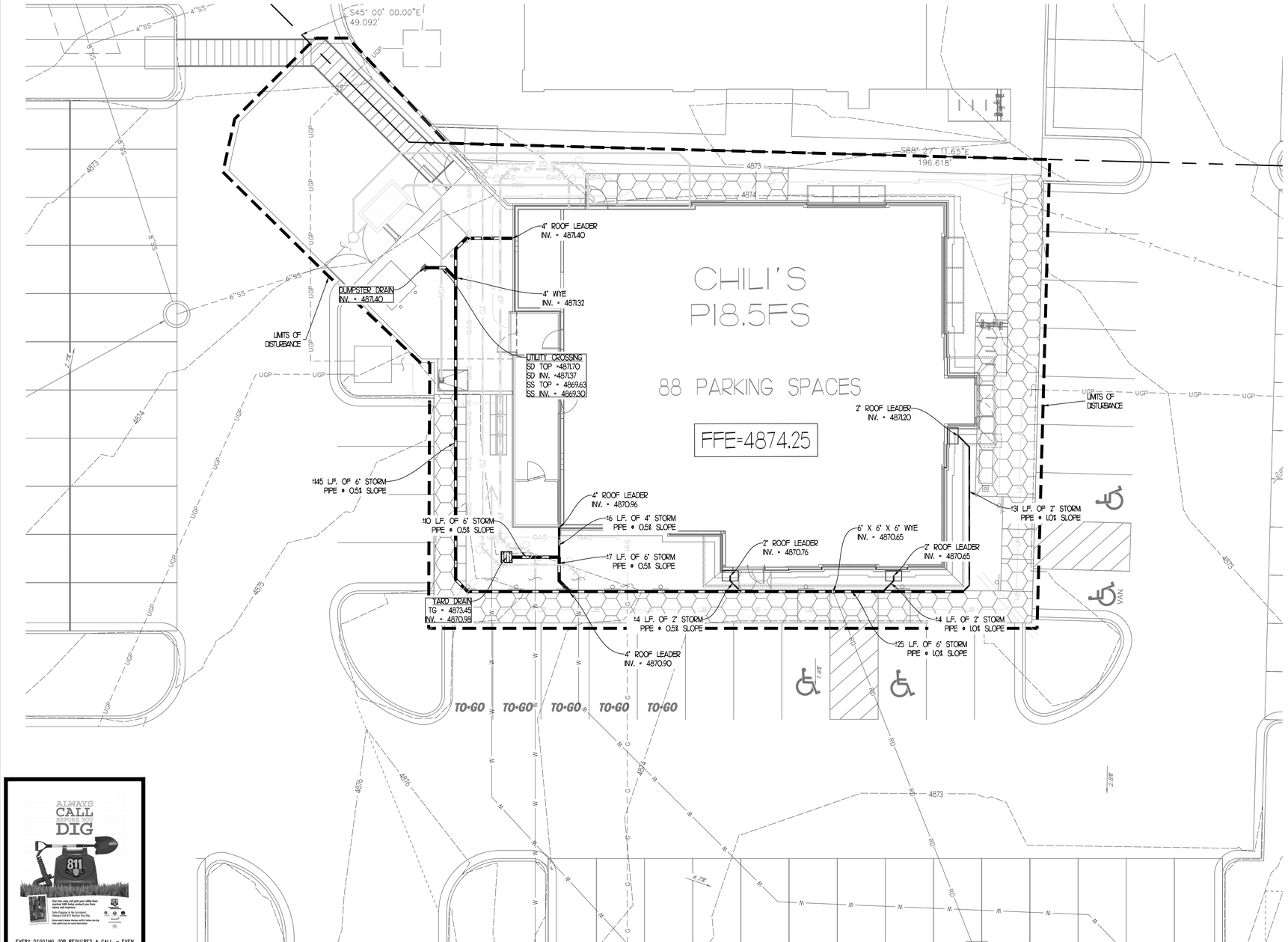

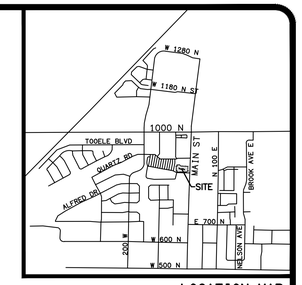

LOCATION MAP
N. T. S.

LEGEND

PROPOSED	DESCRIPTION
	HANDICAP SYMBOL
	SIGN
	STRIPING
	LIMITS OF DISTURBANCE

EXISTING	PROPOSED	DESCRIPTION
665	665	CONTOURS
RD		STORM DRAIN
		YARD INLET
	6626	SPOT ELEVATION
	TC=6626 BC=6621	TC= TOP OF CURB ELEV. BC= BOTTOM OF CURB ELEV.
E.G. 6621	M.E.G 6621	EXISTING GRADE/ MATCH EXISTING GRADE

GRADING NOTES

1. THE CONTRACTOR IS SPECIFICALLY CAUTIONED THAT THE LOCATION AND/OR ELEVATION OF EXISTING UTILITIES AS SHOWN ON THESE PLANS IS BASED ON RECORDS OF THE VARIOUS UTILITY COMPANIES, AND WHERE POSSIBLE, MEASUREMENTS TAKEN IN THE FIELD. THE INFORMATION IS NOT TO BE RELIED ON AS BEING EXACT OR COMPLETE. THE CONTRACTOR MUST CALL THE APPROPRIATE UTILITY COMPANIES AT LEAST 72 HOURS BEFORE ANY EXCAVATION TO REQUEST EXACT FIELD LOCATION OF UTILITIES. IT SHALL BE THE RESPONSIBILITY OF THE CONTRACTOR TO RELOCATE ALL EXISTING UTILITIES WHICH CONFLICT WITH THE PROPOSED IMPROVEMENTS SHOWN ON THE PLANS.
2. ALL CUT OR FILL SLOPES SHALL BE 3:1 OR FLATTER UNLESS OTHERWISE NOTED.
3. PRECAST STRUCTURES MAY BE USED AT CONTRACTORS OPTION.
4. EXISTING PIPES TO BE CLEANED OUT TO REMOVE ALL SILT AND DEBRIS.
5. PIPE LENGTHS ARE BASED ON HORIZONTAL DISTANCE FROM CENTER OF STRUCTURE TO CENTER OF STRUCTURE AND USED FOR DESIGN ONLY. CONTRACTOR TO FIELD VERIFY ACTUAL PIPE LENGTHS NEEDED FOR CONSTRUCTION.
6. EXISTING GRADE CONTOUR INTERVALS SHOWN AT 1 FEET.
7. PROPOSED GRADE CONTOUR INTERVALS SHOWN AT 1 FOOT.
8. IF ANY EXISTING STRUCTURES TO REMAIN ARE DAMAGED DURING CONSTRUCTION IT SHALL BE THE CONTRACTORS RESPONSIBILITY TO REPAIR AND/OR REPLACE THE EXISTING STRUCTURE AS NECESSARY TO RETURN IT TO EXISTING CONDITIONS OR BETTER.
9. ALL STORM PIPE ENTERING STRUCTURES SHALL BE GROUTED TO ASSURE CONNECTION AT STRUCTURE IS WATERTIGHT.
10. ALL STORM SEWER MANHOLES IN PAVED AREAS SHALL BE FLUSH WITH PAVEMENT, AND SHALL HAVE TRAFFIC BEARING RING & COVERS. MANHOLES IN UNPAVED AREAS SHALL BE 6" ABOVE FINISH GRADE. LIDS SHALL BE LABELED "STORM SEWER".
11. THE CONTRACTOR SHALL ADHERE TO ALL TERMS & CONDITIONS AS OUTLINED IN THE EPA OR APPLICABLE STATE GENERAL N.P.D.E.S. PERMIT FOR STORM WATER DISCHARGE ASSOCIATED WITH CONSTRUCTION ACTIVITIES.
12. CONTRACTOR SHALL ADJUST AND/OR CUT EXISTING PAVEMENT AS NECESSARY TO ASSURE A SMOOTH FIT AND CONTINUOUS GRADE.
13. CONTRACTOR SHALL ASSURE POSITIVE DRAINAGE AWAY FROM BUILDINGS FOR ALL NATURAL AND PAVED AREAS, 1% MIN. SLOPE.
14. TOPOGRAPHIC INFORMATION IS TAKEN FROM A TOPOGRAPHIC SURVEY BY CIR ENGINEERING IF THE CONTRACTOR DOES NOT ACCEPT EXISTING TOPOGRAPHY AS SHOWN ON THE PLANS, WITHOUT EXCEPTION, THEN THE CONTRACTOR SHALL SUPPLY, AT THEIR EXPENSE, A TOPOGRAPHIC SURVEY BY A REGISTERED LAND SURVEYOR TO THE OWNER FOR REVIEW.
15. ALL UNSURFACED AREAS DISTURBED BY GRADING OPERATIONS SHALL RECEIVE 4 INCHES OF TOPSOIL. ALL SLOPES 3:1 AND STEEPER SHALL RECEIVE AN EROSION CONTROL BLANKET (CURLEX OR APPROVED EQUAL). CONTRACTOR SHALL STABILIZE DISTURBED AREAS IN ACCORDANCE WITH GOVERNING SPECIFICATIONS UNTIL A HEALTHY STAND OF VEGETATION IS OBTAINED.
16. CONSTRUCTION SHALL COMPLY WITH ALL APPLICABLE GOVERNING CODES AND BE CONSTRUCTED TO SAME.
17. ALL STORM STRUCTURES SHALL HAVE A SMOOTH UNIFORM POURED MORTAR INVERT FROM INVERT IN TO INVERT OUT.
18. ALL ASPECTS OF THE STORMWATER/DRAINAGE COMPONENTS AND/OR TRANSPORTATION COMPONENTS SHALL BE COMPLETED PRIOR TO ISSUANCE OF A FINAL CERTIFICATE OF OCCUPANCY.
19. NO DEVIATIONS OR REVISIONS FROM THESE PLANS BY THE CONTRACTOR SHALL BE ALLOWED WITHOUT PRIOR APPROVAL FROM BOTH THE DESIGN ENGINEER AND TOOELE CITY. ANY DEVIATIONS MAY RESULT IN DELAYS IN OBTAINING A CERTIFICATE OF OCCUPANCY.
20. CONTRACTOR SHALL MAINTAIN RECORD DRAWINGS DURING CONSTRUCTION WHICH SHOW "AS-BUILT" CONDITIONS OF ALL WORK INCLUDING PIPING, DRAINAGE STRUCTURES, TOPO OF PONDS), OUTLET STRUCTURES, DIMENSIONS, ELEVATIONS, GRADING, ETC. RECORD DRAWINGS SHALL BE PROVIDED TO THE ENGINEER BY A REGISTERED SURVEYOR OF RECORD PRIOR TO REQUESTING FINAL INSPECTION.
21. THE OWNER OR HIS AGENT SHALL ARRANGE/SCHEDULE WITH TOOELE CITY A FINAL INSPECTION OF THE DEVELOPMENT UPON COMPLETION AND ANY INTERMEDIATE INSPECTIONS. AS BUILT CERTIFICATION IS REQUIRED PRIOR TO REQUEST FOR FINAL INSPECTION/APPROVAL.
22. NOTIFY UTILITIES 48 HOURS IN ADVANCE PRIOR TO DIGGING WITHIN R/W
23. ANY DAMAGE TO EXISTING ROADS DURING CONSTRUCTION WILL BE REPAIRED BY THE DEVELOPER PRIOR TO FINAL "AS-BUILT" SIGN OFF FROM TOOELE CITY.
24. ALL STEPS IN DRAINAGE STRUCTURES SHALL LINE UP WITH STRUCTURE CASTING TO ENSURE ACCESSIBILITY.
25. ALL PROPOSED DRAINAGE STRUCTURES ARE SHOWN FOR REFERENCE PURPOSED ONLY. CONTRACTOR IS RESPONSIBLE FOR ACCURATE LOCATION OF THE STRUCTURE(S) SUCH THAT THE APPLICABLE CASTING IS CORRECTLY ALIGNED WITH THE SURFACE FEATURES AS DESIGNED.
26. CONTRACTOR SHALL OBTAIN LDEQ NOTICE OF COVERAGE APPROVAL AND/OR TOOELE CITY LAND DIST. PERMIT FOR ALL BORROW/SPOIL SITES.
27. CONTRACTOR SHALL ENSURE THAT THE SIDEWALK LONGITUDINAL SLOPE DOES NOT EXCEED 5% AND THAT THE CROSS SLOPE DOES NOT EXCEED 2%.

EVERY DIGGING JOB REQUIRES A CALL — EVEN SMALL PROJECTS LIKE PLANTING TREES OR SHRUBS. IF YOU HIT AN UNDERGROUND UTILITY LINE WHILE DIGGING, YOU CAN HARM YOURSELF OR THOSE AROUND YOU, DISRUPT SERVICE TO AN ENTIRE NEIGHBORHOOD AND POTENTIALLY BE RESPONSIBLE FOR FINES AND REPAIR COSTS.

SMART DIGGING MEANS CALLING 811 BEFORE EACH JOB. WHETHER YOU ARE A HOMEOWNER OR A PROFESSIONAL EXCAVATOR, ONE CALL TO 811 GETS YOUR UNDERGROUND UTILITY LINES MARKED FOR FREE.

STORM PLAN

SCALE 1" = 10'

REVISIONS	BY

FREELAND and KAUFFMAN, INC.
Engineers * Landscape Architects
209 West Stone Avenue
Greenville, South Carolina 29609
864-233-5497
fax 864-233-8915

PROFESSIONAL ENGINEER No.13889119-2202 TODD BURNETT STATE OF UTAH
09/12/2024

CHILI'S GRILL & BAR
951 N MAIN STREET
TOOELE, UT 84074
BRINKER INTERNATIONAL
3000 OLYMPUS BLVD
DALLAS, TX 75019

DRAWN	JMD
CHECKED	TMB
DATE	09/12/2024
SCALE	AS SHOWN
DRAWING	C201

ISSUED FOR BID SEPTEMBER 12, 2024

EVERY DIGGING JOB REQUIRES A CALL – EVEN SMALL PROJECTS LIKE PLANTING TREES OR SHRUBS. IF YOU HIT AN UNDERGROUND UTILITY LINE WHILE DIGGING, YOU CAN HARM YOURSELF OR THOSE AROUND YOU, DISRUPT SERVICE TO AN ENTIRE NEIGHBORHOOD AND POTENTIALLY BE RESPONSIBLE FOR FINES AND REPAIR COSTS.

SMART DIGGING MEANS CALLING 811 BEFORE EACH JOB, WHETHER YOU ARE A HOMEOWNER OR A PROFESSIONAL EXCAVATOR, ONE CALL TO 811 GETS YOUR UNDERGROUND UTILITY LINES MARKED FOR FREE.

PROPERTY ACREAGE SUMMARY (IN ACRES)	
TOTAL PARCEL(S) AREA	1.27
ON-SITE DISTURBED AREA	0.27
OFF-SITE DISTURBED AREA	0.00
TOTAL DISTURBED AREA CHILI'S DEVELOPMENT ONLY	0.27
PERVIOUS AREA (POST-CONSTRUCTION) ON SITE ONLY	0.07
IMPERVIOUS AREA (POST-CONSTRUCTION) ON SITE ONLY	1.20

DISPOSAL OF SEDIMENT:
SEDIMENT REMOVED FROM SILT FENCE, INLET PROTECTION, ETC. DURING THE COURSE OF CONSTRUCTION, SHALL BE PLACED ON THE TOPSOIL STOCKPILE AND RESPREAD AT THE END OF THE PROJECT. SEDIMENT REMOVED FROM THESE ITEMS AFTER THE SITE HAS BEEN SEEDED, SHALL BE HAULED OFF SITE AND DISPOSED OF AT AN APPROVED, LISCENSED SPOIL AREA. THAT IS IN FULL COMPLIANCE WITH THE NPDES REGULATIONS. CONTRACTOR IS RESPONSIBLE FOR OBTAINING ANY APPROVALS NECESSARY TO ALLOW FOR THE DISPOSAL OF THIS MATERIAL IF HAULED OFF-SITE.

CONTRACTOR SHALL LEAVE ANY EXISTING EROSION CONTROL MEASURES IN PLACE ON AND AROUND THE PREPARED CHILI'S PAD. THE CONTRACTOR SHALL RETAIN AND UTILIZE THESE FEATURES TO THE MAX EXTENT POSSIBLE INCLUDING THE DRAINAGE SWALES NEAR THE BUILDING PAD AREA

SOIL TYPE LEGEND:
LAKEWIN GRAVELLY LOAM, 1 TO 5 PERCENT SOIL TYPE (HSG B) (PER USDA NATURAL RESOURCES CONSERVATION SERVICE WEB SOIL SURVEY)

EROSION CONTROL MAINTENANCE PLAN:

1. ALL SLOPES 3:1 AND STEEPER SHALL RECEIVE A CURLEX BLANKET OR APPROVED EQUAL, IN ADDITION TO HYDROSEEDING. TEMPORARY BERMS MAY BE NEEDED DAILY UNTIL ALL SLOPES ARE BROUGHT TO GRADE.
2. TEMPORARY STABILIZATION MEASURES SHALL BE INITIATED AS SOON AS PRACTICABLE IN PORTIONS OF THE SITE WHERE CONSTRUCTION ACTIVITIES HAVE TEMPORARILY OR PERMANENTLY CEASED. SITE STABILIZATION IS REQUIRED WITHIN 7 DAYS FOR PERIMETER AREAS AND SLOPES GREATER THAN 3:1, FOR ALL OTHER AREAS SITE STABILIZATION IS REQUIRED IN 14 DAYS.
3. ALL SEDIMENT AND EROSION CONTROL DEVICES SHALL BE INSPECTED EVERY SEVEN (7) DAYS OR AFTER EACH RAINFALL OCCURRENCE THAT EXCEEDS ONE-HALF (0.5) INCH. DAMAGE OR INEFFECTIVE DEVICES SHALL BE REPAIRED AND REPLACED AS NECESSARY.
4. PROVIDE SILT FENCE AND/OR OTHER EROSION CONTROL DEVICES, AS MAY BE REQUIRED, TO CONTROL SOIL EROSION DURING UTILITY CONSTRUCTION. ALL DISTURBED AREAS SHALL BE CLEANED, GRADED, AND STABILIZED WITH GRASSING IMMEDIATELY AFTER THE UTILITY INSTALLATION.
5. ALL EROSION CONTROL DEVICES SHALL BE PROPERLY MAINTAINED DURING ALL PHASES OF CONSTRUCTION UNTIL THE COMPLETION OF ALL CONSTRUCTION ACTIVITIES AND ALL DISTURBED AREAS HAVE BEEN STABILIZED. ADDITIONAL EROSION CONTROL DEVICES MAY BE REQUIRED DURING CONSTRUCTION IN ORDER TO CONTROL EROSION AND/OR OFF-SITE SEDIMENTATION. ALL TEMPORARY CONTROL DEVICES SHALL BE REMOVED ONCE CONSTRUCTION IS COMPLETE AND THE SITE IS STABILIZED.
6. THE CONTRACTOR MUST TAKE NECESSARY ACTION TO MINIMIZE THE TRACKING OF MUD ONTO THE PAVED ROADWAY FROM CONSTRUCTION AREAS. THE CONTRACTOR SHALL DAILY REMOVE MUD/SOIL FROM PAVEMENT, AS MAY BE REQUIRED.
7. TEMPORARY DIVERSION BERMS AND/OR DITCHES WILL BE PROVIDED AS NEEDED DURING CONSTRUCTION TO PROTECT WORK AREAS FROM UPSLOPE RUNOFF AND/OR TO DIVERT SEDIMENT LADEN WATER TO APPROPRIATE TRAPS OR STABLE OUTLETS.

CONTRACTOR TO PROTECT EXISTING UTILITY LINES (WATER, SANITARY SEWER, GAS, ELECTRICAL, & TELEPHONE) AND STORM DRAIN TO REMAIN THROUGH-OUT THE ENTIRE CONSTRUCTION PROCESS

ANY FILL DIRT OR WASTE DIRT MUST BE FROM OR TO A PERMITTED SITE.

NOTE: CONTRACTOR SHALL PERFORM FINAL GRADING BASED SOLELY ON THE GRADING PLAN

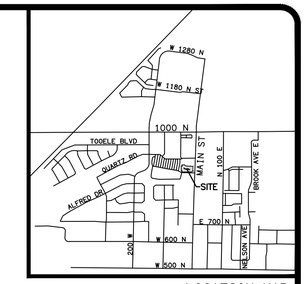

LOCATION MAP
N. T. S.

SEQUENCE OF CONSTRUCTION:

PHASE 1

1. SCHEDULE A PRE-CONSTRUCTION CONFERENCE WITH ALL SUB-CONTRACTORS WHO WILL BE RESPONSIBLE FOR LAND DISTURBING ACTIVITIES AND WHOSE WORK WILL IMPACT THE SWPPP. INVITE AGENCIES TO PRE-CONSTRUCTION CONFERENCE.
2. INSTALL SWPPP ENTRANCE SIGN.
3. INSTALL FIBER ROLL AROUND BUILDING PAD AREA AS SHOWN.
4. INSTALL SILT FENCE ALONG NORTH-ERN SIDE OF PROPERTY, ALONG EXISTING SIDEWLAK.
5. INSTALL CONCRETE WASH-OUT.
6. DESIGNATE CONSTRUCTION EQUIPEMENT PARKING AREA AND TEMPORARY SEDIMENT STOCKPILE AREA.

PHASE 2

7. BEGIN GENERAL GRADING OF THE BUILDING PAD. APPLY PERMANENT STABILIZATION/ ROCK MULCH TO ALL LANDSCAPED AREAS AS SOON AS THEY ARE COMPLETE. DO NOT WAIT UNTIL JOB COMPLETION TO APPLY GROUNDCOVER.
8. INSTALL UTILITIES FROM EXISTING STUBS AND TO APPROXIMATE BUILDING PAD LOCATION.
9. BEGIN CONSTRUCTION OF BUILDING PAD AND STRUCTURES.
10. PERMANENTLY STABILIZE AREAS TO BE VEGETATED AS THEY ARE BROUGHT TO FINAL GRADE. IMMEDIATELY PLACE STONE BASE FOR PAVEMENT ONCE SUB-GRADE ELEVATION HAS BEEN ACHIEVED.
12. PREPARE SITE FOR PAVING. INSTALL SIDEWALKS.
13. INITIATE SWPPP CLOSURE PROCEDURES WITH TOOELE CITY. REMOVE ALL TEMPORARY EROSION AND SEDIMENT CONTROL DEVICES.
14. UPON STABILIZATION OF THE SITE, INSPECT ALL DOWNSTREAM STORM DRAINS, UNDERGROUND DETENTION SYSTEM, AND DRAINAGE SWALES FOR SEDIMENT ACCUMULATION AND CLEAN OUT AS NEEDED.
15. CONTACT OWNER FOR COORDINATION OF FINAL CONSTRUCTION CLOSEOUT.

LEGEND

EXISTING	PROPOSED	DESCRIPTION
		LIMITS OF DISTURBANCE
662	662	CONTOUR LINE
RD		STORM DRAIN
	SF	TEMPORARY SILT FENCE
		ESC FIBER ROLL
	IP	INLET PROTECTION
	RR	RIVER ROCK MULCH
	SD	PERMANENT SODDING AREA

GENERAL EROSION CONTROL NOTES:

1. THE STORMWATER POLLUTION PREVENTION PLAN IS COMPRISED OF THIS DRAWING ("SITE MAP"), THE STANDARD DETAILS, THE PLAN NARRATIVE, ATTACHMENTS INCLUDED IN SPECIFICATIONS, PLUS THE PERMIT AND ALL SUBSEQUENT REPORTS AND RELATED DOCUMENTS.
2. ALL CONTRACTORS AND SUBCONTRACTORS INVOLVED WITH STORM WATER POLLUTION PREVENTION SHALL OBTAIN A COPY OF THE STORM WATER POLLUTION PREVENTION PLAN, THE STATE NATIONAL POLLUTANT DISCHARGE ELIMINATION SYSTEM GENERAL PERMIT (NPDES PERMIT), TOOELE CITY STANDARDS AND BECOME FAMILIAR WITH THEIR CONTENTS.
3. CONTRACTOR SHALL IMPLEMENT BEST MANAGEMENT PRACTICES AS REQUIRED BY THE SWPPP. ADDITIONAL BEST MANAGEMENT PRACTICES SHALL BE IMPLEMENTED AS DICTATED BY CONDITIONS AT NO ADDITIONAL COST TO OWNER THROUGHOUT ALL PHASES OF CONSTRUCTION.
4. BEST MANAGEMENT PRACTICES (BMP'S) AND CONTROLS SHALL CONFORM TO FEDERAL, STATE, OR LOCAL REQUIREMENTS OR MANUAL OF PRACTICE TOOELE CITY STANDARDS AS APPLICABLE. CONTRACTOR SHALL IMPLEMENT ADDITIONAL CONTROLS AS DIRECTED BY PERMITTING AGENCY OR OWNER.
5. SITE MAP MUST CLEARLY DELINEATE ALL STATE WATERS, PERMITS FOR ANY CONSTRUCTION ACTIVITY IMPACTING STATE WATERS OR REGULATED WETLANDS MUST BE MAINTAINED ON SITE AT ALL TIMES.
6. CONTRACTOR SHALL MINIMIZE CLEARING TO THE MAXIMUM EXTENT PRACTICAL OR AS REQUIRED BY THE GENERAL PERMIT.
7. GENERAL CONTRACTOR SHALL DENOTE ON PLAN THE TEMPORARY PARKING AND STORAGE AREA WHICH SHALL ALSO BE USED AS THE EQUIPMENT MAINTENANCE AND CLEANING AREA, EMPLOYEE PARKING AREA, AND AREA FOR LOCATING PORTABLE FACILITIES, OFFICE TRAILERS, AND TOILET FACILITIES.
8. ALL WASH WATER (CONCRETE TRUCKS, VEHICLE CLEANING, EQUIPMENT CLEANING, ETC.) SHALL BE DETAINED AND PROPERLY TREATED OR DISPOSED.
9. SUFFICIENT OIL AND GREASE ABSORBING MATERIALS AND FLOTATION BOOMS SHALL BE MAINTAINED ON SITE OR READILY AVAILABLE TO CONTAIN AND CLEAN-UP FUEL OR CHEMICAL SPILLS AND LEAKS.
10. DUST ON THE SITE SHALL BE CONTROLLED BY SPRAYING WATER ON DRY AREAS OF THE SITE. THE USE OF MOTOR OILS AND OTHER PETROLEUM BASED OR TOXIC LIQUIDS FOR DUST SUPPRESSION OPERATIONS IS PROHIBITED.
11. RUBBISH, TRASH, GARBAGE, LITTER, OR OTHER SUCH MATERIALS SHALL BE DEPOSITED INTO SEALED CONTAINERS. MATERIALS SHALL BE PREVENTED FROM LEAVING THE PREMISES THROUGH THE ACTION OF WIND OR STORMWATER DISCHARGE INTO DRAINAGE DITCHES OR WATERS OF THE STATE.
12. ALL STORM WATER POLLUTION PREVENTION MEASURES PRESENTED ON THIS PLAN, AND IN THE STORM WATER POLLUTION PREVENTION PLAN, SHALL BE INITIATED AS SOON AS PRACTICABLE.
13. TEMPORARY STABILIZATION MEASURES SHALL BE INITIATED AS SOON AS PRACTICABLE IN PORTIONS OF THE SITE WHERE CONSTRUCTION ACTIVITIES HAVE TEMPORARILY OR PERMANENTLY CEASED. SITE STABILIZATION IS REQUIRED WITHIN 7 DAYS FOR PERIMETER AREAS AND SLOPES GREATER THAN 3:1, FOR ALL OTHER AREAS SITE STABILIZATION IS REQUIRED IN 14 DAYS.
14. DISTURBED PORTIONS OF THE SITE WHERE CONSTRUCTION ACTIVITY HAS PERMANENTLY STOPPED SHALL BE PERMANENTLY SEEDED. THESE AREAS SHALL BE SEEDED NO LATER THAN 14 DAYS AFTER THE LAST CONSTRUCTION ACTIVITY OCCURRING IN THESE AREAS. REFER TO THE GRADING PLAN AND/OR LANDSCAPE PLAN.
15. IF THE ACTION OF VEHICLES TRAVELING OVER THE GRAVEL CONSTRUCTION ENTRANCES IS NOT SUFFICIENT TO REMOVE THE MAJORITY OF DIRT OR MUD, THEN THE TIRES MUST BE WASHED BEFORE THE VEHICLES ENTER A PUBLIC ROAD. IF WASHING IS USED, PROVISIONS MUST BE MADE TO INTERCEPT THE WASH WATER AND TRAP THE SEDIMENT BEFORE IT IS CARRIED OFF THE SITE.
16. ALL MATERIALS SPILLED, DROPPED, WASHED, OR TRACKED FROM VEHICLES ONTO ROADWAYS OR INTO STORM DRAINS MUST BE REMOVED IMMEDIATELY.
17. CONTRACTORS OR SUBCONTRACTORS WILL BE RESPONSIBLE FOR REMOVING SEDIMENT THAT MAY HAVE COLLECTED IN THE STORM SEWER DRAINAGE SYSTEMS IN CONJUNCTION WITH THE STABILIZATION OF THE SITE.
18. ON-SITE & OFFSITE SOIL STOCKPILE AND BORROW AREAS SHALL BE PROTECTED FROM EROSION AND SEDIMENTATION THROUGH IMPLEMENTATION OF BEST MANAGEMENT PRACTICES. STOCKPILE AND BORROW AREA LOCATIONS SHALL BE FIELD-LOCATED AND NOTED ON THE SITE MAP AND PERMITTED IN ACCORDANCE WITH GENERAL PERMIT REQUIREMENTS.
19. SLOPES SHALL BE LEFT IN A ROUGHENED CONDITION DURING THE GRADING PHASE TO REDUCE RUNOFF VELOCITIES AND EROSION.
20. DUE TO THE GRADE CHANGES DURING THE DEVELOPMENT OF THE PROJECT, THE CONTRACTOR SHALL BE RESPONSIBLE FOR ADJUSTING THE EROSION CONTROL MEASURES (SILT FENCES, ETC.) TO PREVENT EROSION.
21. ALL CONSTRUCTION SHALL BE STABILIZED AT THE END OF EACH WORKING DAY, THIS INCLUDES BACKFILLING OF TRENCHES FOR UTILITY CONSTRUCTION AND PLACEMENT OF GRAVEL OR BITUMINOUS PAVING FOR ROAD CONSTRUCTION.

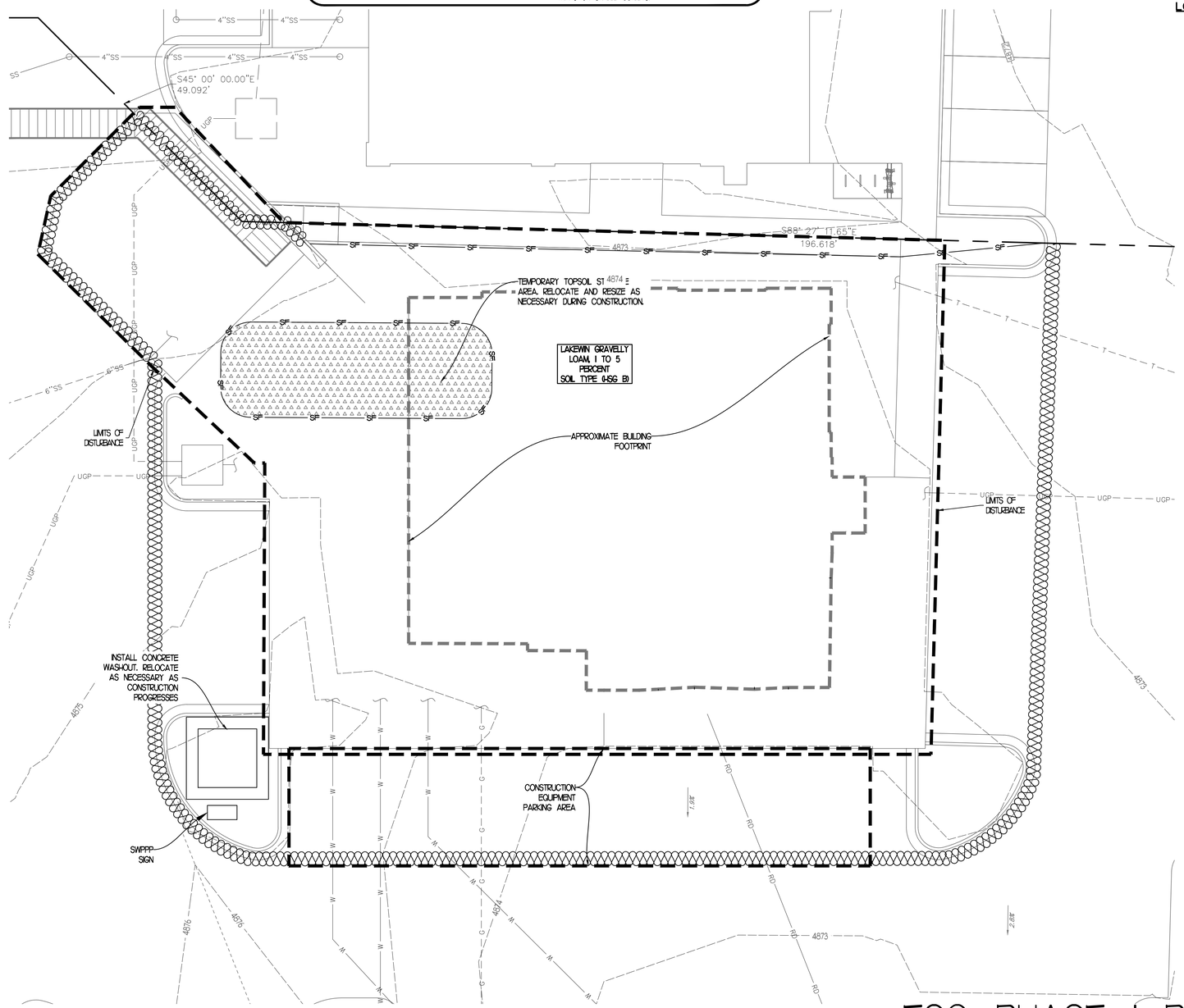

ESC PHASE 1 PLAN

0' 10' 20'
SCALE 1" = 10'

ISSUED FOR BID SEPTEMBER 12, 2024

REVISIONS	BY

FREELAND and KAUFFMAN, INC.
Engineers * Landscape Architects
209 West Stone Avenue
Greenville, South Carolina 29609
864-233-5497
fax 864-233-8915

PROFESSIONAL ENGINEER No.13889119-2202 TODD BURNETT STATE OF UTAH
09/12/2024

CHILI'S GRILL & BAR
951 N MAIN STREET
TOOELE, UT 84074

BRINKER INTERNATIONAL
3000 OLYMPUS BLVD
DALLAS, TX 75019

DRAWN	JMD
CHECKED	TMB
DATE	09/12/2024
SCALE	AS SHOWN
DRAWING	C301

EVERY DIGGING JOB REQUIRES A CALL – EVEN SMALL PROJECTS LIKE PLANTING TREES OR SHRUBS. IF YOU HIT AN UNDERGROUND UTILITY LINE WHILE DIGGING, YOU CAN HARM YOURSELF OR THOSE AROUND YOU, DISRUPT SERVICE TO AN ENTIRE NEIGHBORHOOD AND POTENTIALLY BE RESPONSIBLE FOR FINES AND REPAIR COSTS.

SMART DIGGING MEANS CALLING 811 BEFORE EACH JOB, WHETHER YOU ARE A HOMEOWNER OR A PROFESSIONAL EXCAVATOR, ONE CALL TO 811 GETS YOUR UNDERGROUND UTILITY LINES MARKED FOR FREE.

PROPERTY ACREAGE SUMMARY (IN ACRES)	
TOTAL PARCEL(S) AREA	1.27
ON-SITE DISTURBED AREA	0.27
OFF-SITE DISTURBED AREA	0.00
TOTAL DISTURBED AREA CHILI'S DEVELOPMENT ONLY	0.27
PERVIOUS AREA (POST-CONSTRUCTION) ON SITE ONLY	0.07
IMPERVIOUS AREA (POST-CONSTRUCTION) ON SITE ONLY	1.20

DISPOSAL OF SEDIMENT:
SEDIMENT REMOVED FROM SILT FENCE, INLET PROTECTION, ETC. DURING THE COURSE OF CONSTRUCTION, SHALL BE PLACED ON THE TOPSOIL STOCKPILE AND RESPREAD AT THE END OF THE PROJECT. SEDIMENT REMOVED FROM THESE ITEMS AFTER THE SITE HAS BEEN SEEDED, SHALL BE HAULED OFF SITE AND DISPOSED OF AT AN APPROVED, LISCENSED SPOIL AREA. THAT IS IN FULL COMPLIANCE WITH THE NPDES REGULATIONS. CONTRACTOR IS RESPONSIBLE FOR OBTAINING ANY APPROVALS NECESSARY TO ALLOW FOR THE DISPOSAL OF THIS MATERIAL IF HAULED OFF-SITE.

CONTRACTOR SHALL LEAVE ANY EXISTING EROSION CONTROL MEASURES IN PLACE ON AND AROUND THE PREPARED CHILI'S PAD. THE CONTRACTOR SHALL RETAIN AND UTILIZE THESE FEATURES TO THE MAX EXTENT POSSIBLE INCLUDING THE DRAINAGE SWALES NEAR THE BUILDING PAD AREA

SOIL TYPE LEGEND:
LAKEVIW GRAVELLY LOAM, 1 TO 5 PERCENT SOIL TYPE (456) B) (PER USDA NATURAL RESOURCES CONSERVATION SERVICE WEB SOIL SURVEY)

EROSION CONTROL MAINTENANCE PLAN:

1. ALL SLOPES 3:1 AND STEEPER SHALL RECEIVE A CURLEX BLANKET OR APPROVED EQUAL, IN ADDITION TO HYDROSEEDING. TEMPORARY BERMS MAY BE NEEDED DAILY UNTIL ALL SLOPES ARE BROUGHT TO GRADE.
2. TEMPORARY STABILIZATION MEASURES SHALL BE INITIATED AS SOON AS PRACTICABLE IN PORTIONS OF THE SITE WHERE CONSTRUCTION ACTIVITIES HAVE TEMPORARILY OR PERMANENTLY CEASED. SITE STABILIZATION IS REQUIRED WITHIN 7 DAYS FOR PERIMETER AREAS AND SLOPES GREATER THAN 3:1, FOR ALL OTHER AREAS SITE STABILIZATION IS REQUIRED IN 14 DAYS.
3. ALL SEDIMENT AND EROSION CONTROL DEVICES SHALL BE INSPECTED EVERY SEVEN (7) DAYS OR AFTER EACH RAINFALL OCCURRENCE THAT EXCEEDS ONE-HALF (0.5) INCH. DAMAGE OR INEFFECTIVE DEVICES SHALL BE REPAIRED AND REPLACED AS NECESSARY.
4. PROVIDE SILT FENCE AND/OR OTHER EROSION CONTROL DEVICES, AS MAY BE REQUIRED, TO CONTROL SOIL EROSION DURING UTILITY CONSTRUCTION. ALL DISTURBED AREAS SHALL BE CLEANED, GRADED, AND STABILIZED WITH GRASSING IMMEDIATELY AFTER THE UTILITY INSTALLATION.
5. ALL EROSION CONTROL DEVICES SHALL BE PROPERLY MAINTAINED DURING ALL PHASES OF CONSTRUCTION UNTIL THE COMPLETION OF ALL CONSTRUCTION ACTIVITIES AND ALL DISTURBED AREAS HAVE BEEN STABILIZED. ADDITIONAL EROSION CONTROL DEVICES MAY BE REQUIRED DURING CONSTRUCTION IN ORDER TO CONTROL EROSION AND/OR OFF-SITE SEDIMENTATION. ALL TEMPORARY CONTROL DEVICES SHALL BE REMOVED ONCE CONSTRUCTION IS COMPLETE AND THE SITE IS STABILIZED.
6. THE CONTRACTOR MUST TAKE NECESSARY ACTION TO MINIMIZE THE TRACKING OF MUD ONTO THE PAVED ROADWAY FROM CONSTRUCTION AREAS. THE CONTRACTOR SHALL DAILY REMOVE MUD/SOIL FROM PAVEMENT, AS MAY BE REQUIRED.
7. TEMPORARY DIVERSION BERMS AND/OR DITCHES WILL BE PROVIDED AS NEEDED DURING CONSTRUCTION TO PROTECT WORK AREAS FROM UPSLOPE RUNOFF AND/OR TO DIVERT SEDIMENT LADEN WATER TO APPROPRIATE TRAPS OR STABLE OUTLETS.

CONTRACTOR TO PROTECT EXISTING UTILITY LINES (WATER, SANITARY SEWER, GAS, ELECTRICAL, & TELEPHONE) AND STORM DRAIN TO REMAIN THROUGH-OUT THE ENTIRE CONSTRUCTION PROCESS

ANY FILL DIRT OR WASTE DIRT MUST BE FROM OR TO A PERMITTED SITE.

NOTE: CONTRACTOR SHALL PERFORM FINAL GRADING BASED SOLELY ON THE GRADING PLAN

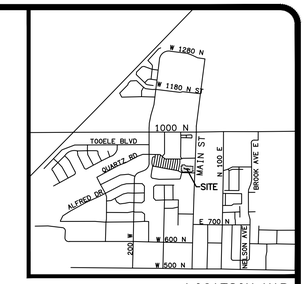

LOCATION MAP
N. T. S.

SEQUENCE OF CONSTRUCTION:

PHASE 1

1. SCHEDULE A PRE-CONSTRUCTION CONFERENCE WITH ALL SUB-CONTRACTORS WHO WILL BE RESPONSIBLE FOR LAND DISTURBING ACTIVITIES AND WHOSE WORK WILL IMPACT THE SWPPP. INVITE AGENCIES TO PRE-CONSTRUCTION CONFERENCE.
2. INSTALL SWPPP ENTRANCE SIGN.
3. INSTALL FIBER ROLL AROUND BUILDING PAD AREA AS SHOWN.
4. INSTALL SILT FENCE ALONG NORTH-EBN SIDE OF PROPERTY, ALONG EXISTING SIDEWLAK.
5. INSTALL CONCRETE WASH-OUT.
6. DESIGNATE CONSTRUCTION EQUIPEMENT PARKING AREA AND TEMPORARY SEDIMENT STOCKPILE AREA.

PHASE 2

7. BEGIN GENERAL GRADING OF THE BUILDING PAD. APPLY PERMANENT STABILIZATION/ ROCK MULCH TO ALL LANDSCAPED AREAS AS SOON AS THEY ARE COMPLETE. DO NOT WAIT UNTIL JOB COMPLETION TO APPLY GROUNDCOVER.
8. INSTALL UTILITIES FROM EXISTING STUBS AND TO APPROXIMATE BUILDING PAD LOCATION.
9. BEGIN CONSTRUCTION OF BUILDING PAD AND STRUCTURES.
10. PERMANENTLY STABILIZE AREAS TO BE VEGETATED AS THEY ARE BROUGHT TO FINAL GRADE. IMMEDIATELY PLACE STONE BASE FOR PAVEMENT ONCE SUB-GRADE ELEVATION HAS BEEN ACHIEVED.
12. PREPARE SITE FOR PAVING. INSTALL SIDEWALKS.
13. INITIATE SWPPP CLOSURE PROCEDURES WITH TOOELE CITY. REMOVE ALL TEMPORARY EROSION AND SEDIMENT CONTROL DEVICES.
14. UPON STABILIZATION OF THE SITE, INSPECT ALL DOWNSTREAM STORM DRAINS, UNDERGROUND DETENTION SYSTEM, AND DRAINAGE SWALES FOR SEDIMENT ACCUMULATION AND CLEAN OUT AS NEEDED.
15. CONTACT OWNER FOR COORDINATION OF FINAL CONSTRUCTION CLOSEOUT.

LEGEND

EXISTING	PROPOSED	DESCRIPTION
		LIMITS OF DISTURBANCE
662	662	CONTOUR LINE
RD		STORM DRAIN
	SF	TEMPORARY SILT FENCE
		ESC FIBER ROLL
	IP	INLET PROTECTION
	RR	RIVER ROCK MULCH
	SD	PERMANENT SODDING AREA

GENERAL EROSION CONTROL NOTES:

1. THE STORMWATER POLLUTION PREVENTION PLAN IS COMPRISED OF THIS DRAWING ("SITE MAP"), THE STANDARD DETAILS, THE PLAN NARRATIVE, ATTACHMENTS INCLUDED IN SPECIFICATIONS, PLUS THE PERMIT AND ALL SUBSEQUENT REPORTS AND RELATED DOCUMENTS.
2. ALL CONTRACTORS AND SUBCONTRACTORS INVOLVED WITH STORM WATER POLLUTION PREVENTION SHALL OBTAIN A COPY OF THE STORM WATER POLLUTION PREVENTION PLAN, THE STATE NATIONAL POLLUTANT DISCHARGE ELIMINATION SYSTEM GENERAL PERMIT (NPDES PERMIT), TOOELE CITY ENGINEERING STANDARDS AND BECOME FAMILIAR WITH THEIR CONTENTS.
3. CONTRACTOR SHALL IMPLEMENT BEST MANAGEMENT PRACTICES AS REQUIRED BY THE SWPPP. ADDITIONAL BEST MANAGEMENT PRACTICES SHALL BE IMPLEMENTED AS DICTATED BY CONDITIONS AT NO ADDITIONAL COST TO OWNER THROUGHOUT ALL PHASES OF CONSTRUCTION.
4. BEST MANAGEMENT PRACTICES (BMP'S) AND CONTROLS SHALL CONFORM TO FEDERAL, STATE, OR LOCAL REQUIREMENTS OR MANUAL OF PRACTICE TOOELE CITY ENGINEERING STANDARDS AS APPLICABLE. CONTRACTOR SHALL IMPLEMENT ADDITIONAL CONTROLS AS DIRECTED BY PERMITTING AGENCY OR OWNER.
5. SITE MAP MUST CLEARLY DELINEATE ALL STATE WATERS. PERMITS FOR ANY CONSTRUCTION ACTIVITY IMPACTING STATE WATERS OR REGULATED WETLANDS MUST BE MAINTAINED ON SITE AT ALL TIMES.
6. CONTRACTOR SHALL MINIMIZE CLEARING TO THE MAXIMUM EXTENT PRACTICAL OR AS REQUIRED BY THE GENERAL PERMIT.
7. GENERAL CONTRACTOR SHALL DENOTE ON PLAN THE TEMPORARY PARKING AND STORAGE AREA WHICH SHALL ALSO BE USED AS THE EQUIPMENT MAINTENANCE AND CLEANING AREA, EMPLOYEE PARKING AREA, AND AREA FOR LOCATING PORTABLE FACILITIES, OFFICE TRAILERS, AND TOILET FACILITIES.
8. ALL WASH WATER (CONCRETE TRUCKS, VEHICLE CLEANING, EQUIPMENT CLEANING, ETC.) SHALL BE DETAINED AND PROPERLY TREATED OR DISPOSED.
9. SUFFICIENT OIL AND GREASE ABSORBING MATERIALS AND FLOTATION BOOMS SHALL BE MAINTAINED ON SITE OR READILY AVAILABLE TO CONTAIN AND CLEAN-UP FUEL OR CHEMICAL SPILLS AND LEAKS.
10. DUST ON THE SITE SHALL BE CONTROLLED BY SPRAYING WATER ON DRY AREAS OF THE SITE. THE USE OF MOTOR OILS AND OTHER PETROLEUM BASED OR TOXIC LIQUIDS FOR DUST SUPPRESSION OPERATIONS IS PROHIBITED.
11. RUBBISH, TRASH, GARBAGE, LITTER, OR OTHER SUCH MATERIALS SHALL BE DEPOSITED INTO SEALED CONTAINERS. MATERIALS SHALL BE PREVENTED FROM LEAVING THE PREMISES THROUGH THE ACTION OF WIND OR STORMWATER DISCHARGE INTO DRAINAGE DITCHES OR WATERS OF THE STATE.
12. ALL STORM WATER POLLUTION PREVENTION MEASURES PRESENTED ON THIS PLAN, AND IN THE STORM WATER POLLUTION PREVENTION PLAN, SHALL BE INITIATED AS SOON AS PRACTICABLE.
13. TEMPORARY STABILIZATION MEASURES SHALL BE INITIATED AS SOON AS PRACTICABLE IN PORTIONS OF THE SITE WHERE CONSTRUCTION ACTIVITIES HAVE TEMPORARILY OR PERMANENTLY CEASED. SITE STABILIZATION IS REQUIRED WITHIN 7 DAYS FOR PERIMETER AREAS AND SLOPES GREATER THAN 3:1, FOR ALL OTHER AREAS SITE STABILIZATION IS REQUIRED IN 14 DAYS.
14. DISTURBED PORTIONS OF THE SITE WHERE CONSTRUCTION ACTIVITY HAS PERMANENTLY STOPPED SHALL BE PERMANENTLY SEEDED. THESE AREAS SHALL BE SEEDED NO LATER THAN 14 DAYS AFTER THE LAST CONSTRUCTION ACTIVITY OCCURING IN THESE AREAS. REFER TO THE GRADING PLAN AND/OR LANDSCAPE PLAN.
15. IF THE ACTION OF VEHICLES TRAVELING OVER THE GRAVEL CONSTRUCTION ENTRANCES IS NOT SUFFICIENT TO REMOVE THE MAJORITY OF DIRT OR MUD, THEN THE TIRES MUST BE WASHED BEFORE THE VEHICLES ENTER A PUBLIC ROAD. IF WASHING IS USED, PROVISIONS MUST BE MADE TO INTERCEPT THE WASH WATER AND TRAP THE SEDIMENT BEFORE IT IS CARRIED OFF THE SITE.
16. ALL MATERIALS SPILLED, DROPPED, WASHED, OR TRACKED FROM VEHICLES ONTO ROADWAYS OR INTO STORM DRAINS MUST BE REMOVED IMMEDIATELY.
17. CONTRACTORS OR SUBCONTRACTORS WILL BE RESPONSIBLE FOR REMOVING SEDIMENT THAT MAY HAVE COLLECTED IN THE STORM SEWER DRAINAGE SYSTEMS IN CONJUNCTION WITH THE STABILIZATION OF THE SITE.
18. ON-SITE & OFFSITE SOIL STOCKPILE AND BORROW AREAS SHALL BE PROTECTED FROM EROSION AND SEDIMENTATION THROUGH IMPLEMENTATION OF BEST MANAGEMENT PRACTICES. STOCKPILE AND BORROW AREA LOCATIONS SHALL BE FIELD-LOCATED AND NOTED ON THE SITE MAP AND PERMITTED IN ACCORDANCE WITH GENERAL PERMIT REQUIREMENTS.
19. SLOPES SHALL BE LEFT IN A ROUGHENED CONDITION DURING THE GRADING PHASE TO REDUCE RUNOFF VELOCITIES AND EROSION.
20. DUE TO THE GRADE CHANGES DURING THE DEVELOPMENT OF THE PROJECT, THE CONTRACTOR SHALL BE RESPONSIBLE FOR ADJUSTING THE EROSION CONTROL MEASURES (SILT FENCES, ETC.) TO PREVENT EROSION.
21. ALL CONSTRUCTION SHALL BE STABILIZED AT THE END OF EACH WORKING DAY, THIS INCLUDES BACKFILLING OF TRENCHES FOR UTILITY CONSTRUCTION AND PLACEMENT OF GRAVEL OR BITUMINOUS PAVING FOR ROAD CONSTRUCTION.

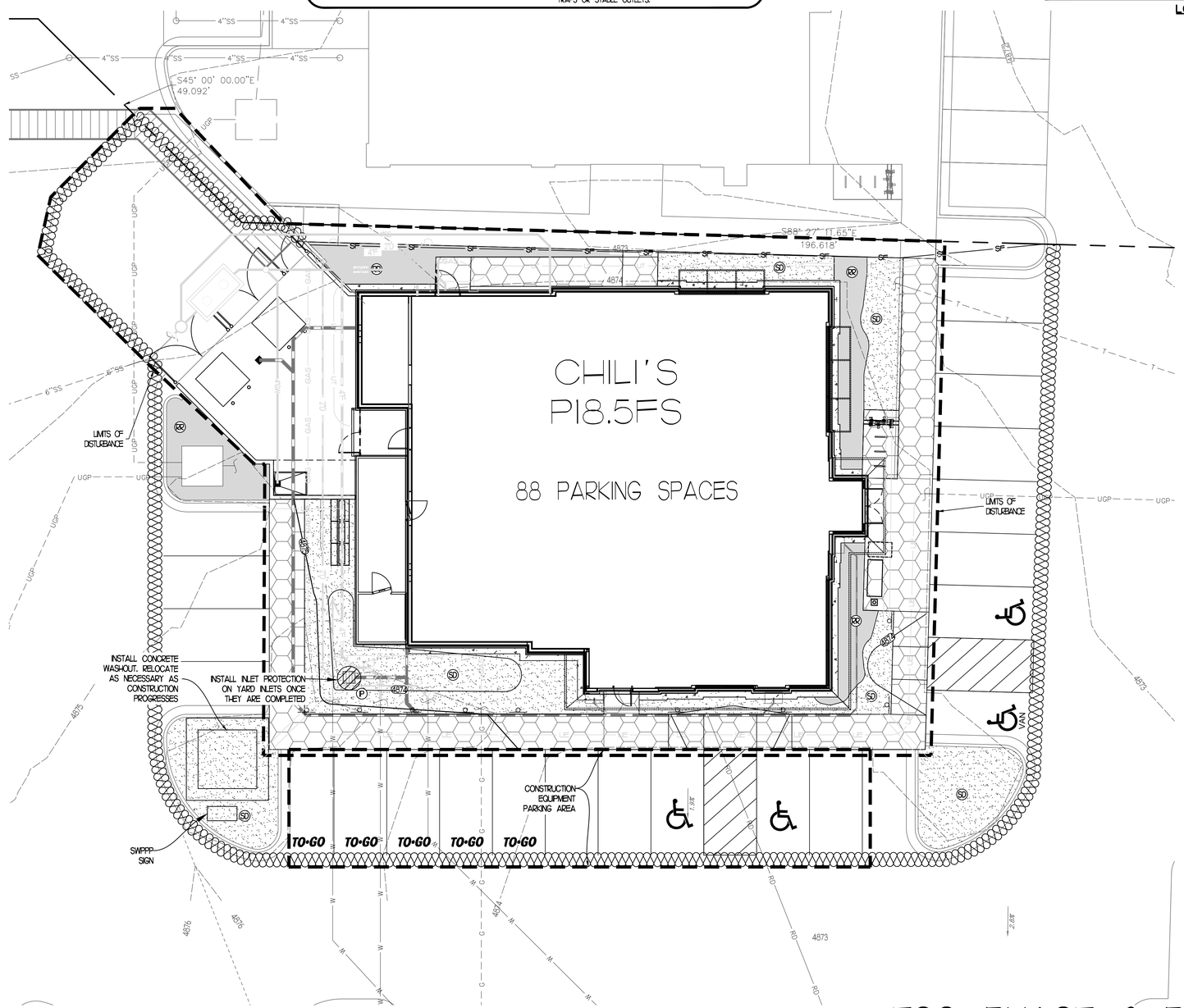

ESC PHASE 2 PLAN

REVISIONS	BY

FREELAND and KAUFFMAN, INC.
Engineers * Landscape Architects
209 West Stone Avenue
Greenville, South Carolina 29609
864-233-5497
fax 864-233-8915

PROFESSIONAL ENGINEER No.13889119-2202 TODD BURNETT STATE OF UTAH
09/12/2024

CHILI'S GRILL & BAR
951 N MAIN STREET
TOOELE, UT 84074
BRINKER INTERNATIONAL
3000 OLYMPUS BLVD
DALLAS, TX 75019

DRAWN	JMD
CHECKED	TMB
DATE	09/12/2024
SCALE	AS SHOWN
DRAWING	C302

ISSUED FOR BID SEPTEMBER 12, 2024

NOT USED

N.T.S. 1 / C303

STRAW BALE BARRIER CONCRETE WASHOUT

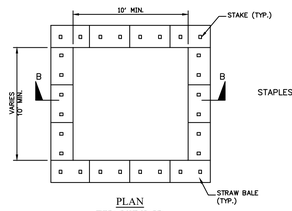

PLAN
TYPE "ABOVE GRADE" WITH STRAW BALES

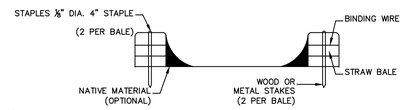

SECTION B-B

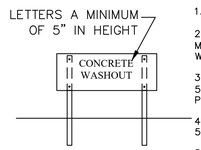

CONCRETE WASHOUT SIGN DETAIL

NOTES:

1. ACTUAL LAYOUT DETERMINED IN FIELD.
2. INSTALL CONCRETE WASHOUT SIGN (24"X24", MINIMUM) WITHIN 30' OF THE TEMPORARY CONCRETE WASHOUT FACILITY.
3. TEMPORARY WASHOUT AREA MUST BE AT LEAST 50' FROM A STORM DRAIN, CREEK BANK OR PERIMETER CONTROL.
4. CLEAN OUT CONCRETE WASHOUT AREA WHEN 50% FULL.
5. THE KEY TO FUNCTIONAL CONCRETE WASHOUTS IS WEEKLY INSPECTIONS, ROUTINE MAINTENANCE, AND REGULAR CLEAN OUT.
6. SILT FENCE SHALL BE INSTALLED AROUND PERIMETER OF CONCRETE WASHOUT AREA EXCEPT FOR THE SIDE UTILIZED FOR ACCESSING THE WASHOUT.
7. A ROCK CONSTRUCTION ENTRANCE MAY BE NECESSARY ALONG ONE SIDE OF THE WASHOUT TO PROVIDE VEHICLE ACCESS.

CONCRETE WASHOUT

N.T.S. 3 / C303

TYPICAL CONSTRUCTION SEQUENCE FOR DOME FRAME & COVER

1. EXCAVATE APPROXIMATELY 4" TO 6" BELOW THE TOP OF THE INLET STRUCTURE.
2. PLACE THE FRAME ONTO THE INLET STRUCTURE, ENSURING PROPER SEATING OF FRAME TO STRUCTURE.
3. SLIDE THE COVER OVER THE FRAME.
4. FILL THE COVER POCKETS WITH SOIL, #57 GRAVEL OR EQUIVALENT. THE COVER POCKETS SHOULD BE COMPLETELY FILLED TO ENSURE A GOOD SEAL BETWEEN THE GROUND AND INLET STRUCTURE.
5. BACK FILL AROUND THE FRAME AND COVER ASSEMBLY IS NOT REQUIRED TO COMPLETE INSTALLATION; HOWEVER, BACKFILLING MAY BE NECESSARY TO COMPLETE EXCAVATION REQUIREMENTS FOR THE SITE.

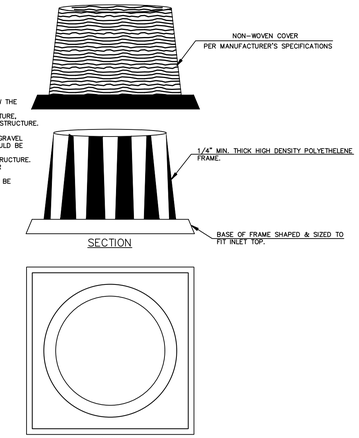

SECTION

PLAN

DOMED INLET PROTECTION (PREFABRICATED)

N.T.S. 4 / C303

NOT USED

N.T.S. 2 / C303

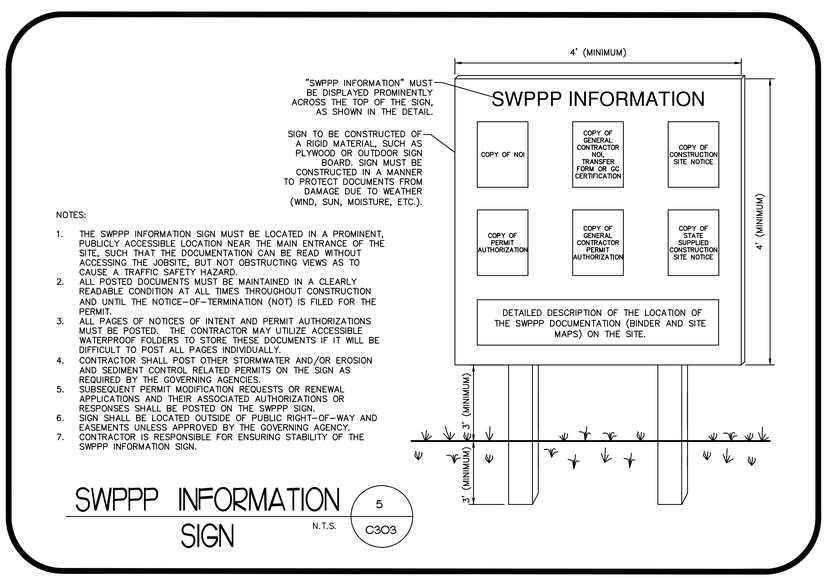

NOTES:

1. THE SWPPP INFORMATION SIGN MUST BE LOCATED IN A PROMINENT, PUBLICLY ACCESSIBLE LOCATION NEAR THE MAIN ENTRANCE OF THE SITE, SUCH THAT THE DOCUMENTATION CAN BE READ WITHOUT ACCESSING THE JOBSITE, BUT NOT OBSTRUCTING VIEWS AS TO CAUSE A TRAFFIC SAFETY HAZARD.
2. ALL POSTED DOCUMENTS MUST BE MAINTAINED IN A CLEARLY READABLE CONDITION AT ALL TIMES THROUGHOUT CONSTRUCTION AND UNTIL THE NOTICE-OF-TERMINATION (NOT) IS FILED FOR THE PERMIT.
3. ALL PAGES OF NOTICES OF INTENT AND PERMIT AUTHORIZATIONS MUST BE POSTED. THE CONTRACTOR MAY UTILIZE ACCESSIBLE WATERPROOF FOLDERS TO STORE THESE DOCUMENTS IF IT WILL BE DIFFICULT TO POST ALL PAGES INDIVIDUALLY.
4. CONTRACTOR SHALL POST OTHER STORMWATER AND/OR EROSION AND SEDIMENT CONTROL RELATED PERMITS ON THE SIGN AS REQUIRED BY THE GOVERNING AGENCIES.
5. SUBSEQUENT PERMIT MODIFICATION REQUESTS OR RENEWAL APPLICATIONS AND THEIR ASSOCIATED AUTHORIZATIONS OR RESPONSES SHALL BE POSTED ON THE SWPPP SIGN.
6. SIGN SHALL BE LOCATED OUTSIDE OF PUBLIC RIGHT-OF-WAY AND EASEMENTS UNLESS APPROVED BY THE GOVERNING AGENCY.
7. CONTRACTOR IS RESPONSIBLE FOR ENSURING STABILITY OF THE SWPPP INFORMATION SIGN.

SWPPP INFORMATION SIGN

N.T.S. 5 / C303

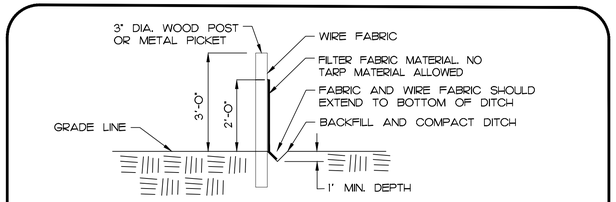

SIDE VIEW

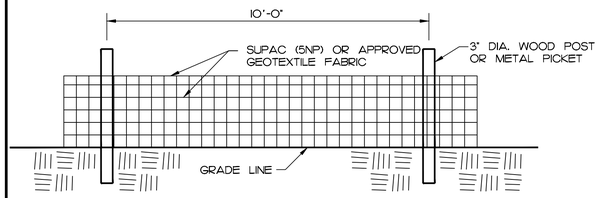

FRONT VIEW

NOTES:
1. INSTALL SILT FENCE BEFORE CONSTRUCTION IS BEGUN.
2. CONSTRUCT SILT FENCE AS ABOVE OR USE PREFABRICATED SILT FENCE (METROMONT 24-100X) OR APPROVED EQUAL.

SILT FENCE

6 / C303

USE 8" MIN. DIAMETER FIBER ROLLS AT EDGE OF PROPOSED GRADING AREAS. INSTALL IN A CONCAVE TRENCH 2 TO 4 INCHES DEEP ALONG THE PROPOSED INSTALLATION ROUTE. TURN THE ENDS OF THE FIBER ROLL UP SLOPE TO PREVENT RUNOFF GOING AROUND THE ROLL. OVERLAP FIBER ROLL ENDS, DO NOT BUT END TO END. STAKE AT ENDS OF EACH FIBER ROLL AND 4' MAX. ON CENTER. USE STAKES WITH A NOMINAL CLASSIFICATION OF 0.75 IN. X 0.75 IN. AND MIN. LENGTH OF 24"

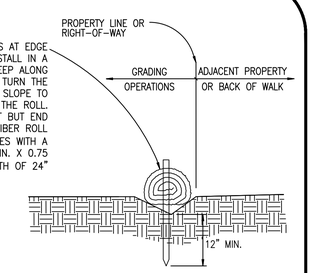

ESC FIBER ROLL

N.T.S. 7 / C303

ESC DETAILS

REVISIONS	BY

FREELAND and KAUFFMAN, INC.
Engineers * Landscape Architects
209 West Stone Avenue
Greenville, South Carolina 29609
864-233-5497
fax 864-233-8915

No.13889119-2202 PROFESSIONAL ENGINEER TODD BURNETT STATE OF UTAH
09/12/2024

CHILI'S GRILL & BAR
951 N MAIN STREET
TOOELE, UT 84074

BRINKER INTERNATIONAL
3000 OLYMPUS BLVD
DALLAS, TX 75019

DRAWN	JMD
CHECKED	TMB
DATE	09/12/2024
SCALE	AS SHOWN
DRAWING	C303

ISSUED FOR BID SEPTEMBER 12, 2024

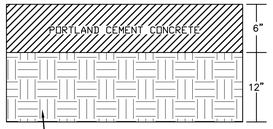

DUMPSTER PAD & APPROACH PAVEMENT SECTION
NOT TO SCALE

NOTE: ALL MATERIAL TYPES ARE UDOT STANDARD MATERIAL TYPES CALLED OUT BY ITEM NUMBER.

CONSTRUCTION SHALL CONFORM TO THE UTAH DEPARTMENT OF TRANSPORTATION "SPECIFICATIONS FOR ROAD AND BRIDGE CONSTRUCTION", LATEST EDITION.

-CONCRETE CONTROL JOINT SPACING SHALL BE 12' OC
-CONCRETE CONTROL JOINTS SHALL BE LOAD TRANSFER REINFORCED
-TIE BARS SHALL BE PLACED AT ALL CONSTRUCTION JOINTS PARALLEL TO TRAFFIC AND CONSIST OF GRADE 40, NO. 4 REINFORCING BARS 24" IN LENGTH AND PLACED AT 48" ON-CENTER.
-EXPANSION JOINTS SHALL BE PROVIDED WHERE PAVEMENT ABUTS FIXED OBJECTS SUCH AS BUILDING AND LIGHT POLES.

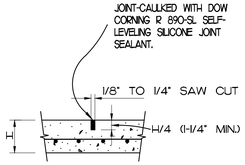

SAWED CONTROL JOINT

PAVING DETAILS

1 / C501

THE PAVEMENT DESIGN AS SHOWN IS PROVIDED BY AGEC APPLIED GEOTECH DATED MARCH 4, 2019. ENGINEER OF RECORD DOES NOT WARRANT THE EFFECTIVNESS OF THE DESIGN. ENGINEER OF RECORD ACCEPTS NO LIABILITY OR RESPONSIBILITY FOR SAID DESIGN.

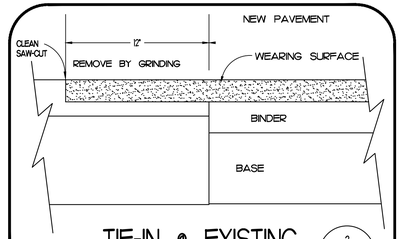

TIE-IN @ EXISTING PAVEMENT

2 / C501

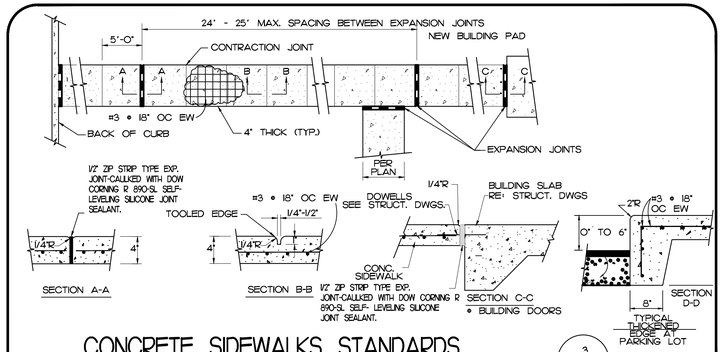

CONCRETE SIDEWALKS STANDARDS

(N.T.S.)

3 / C501

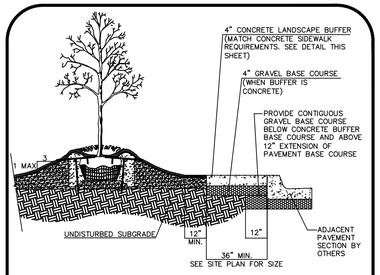

LANDSCAPE BUFFER

4 / C501

NOT USED

N.T.S.

5 / C501

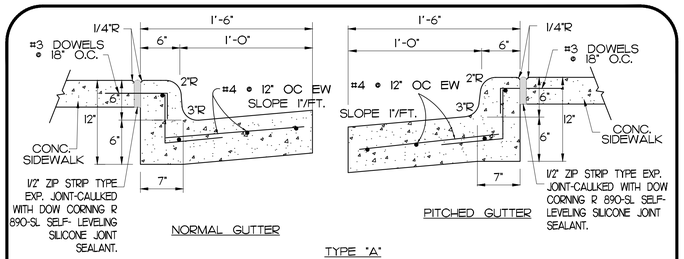

TYPE "A"

NOTE: FOR PAVEMENT AREAS THAT SLOPE TOWARD CURB AND GUTTER, USE NORMAL GUTTER, FOR THOSE AREAS THAT SLOPE AWAY FROM CURB AND GUTTER, USE PITCHED GUTTER

ONSITE CURB & GUTTER

N.T.S.

8 / C501

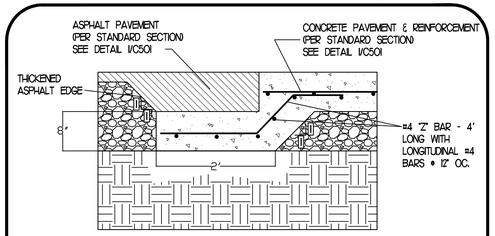

CONCRETE PAVEMENT TO ASPHALT PAVEMENT SECTION

(N.T.S.)

7 / C501

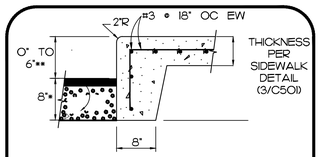

*TURN DOWN TO EXTEND TO BOTTOM OF PAVEMENT SECTION AGGREGATE BASE
**0" AT HANDICAP ACCESS

INTEGRAL SIDEWALK CURB

N.T.S.

6 / C501

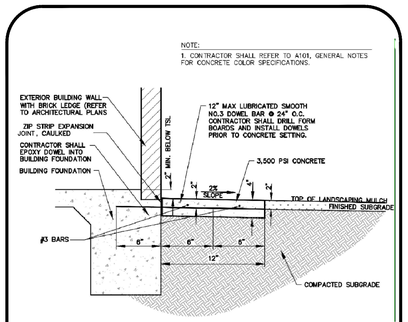

CONCRETE APRON DETAIL

N.T.S.

10 / C501

NOT USED

N.T.S.

11 / C501

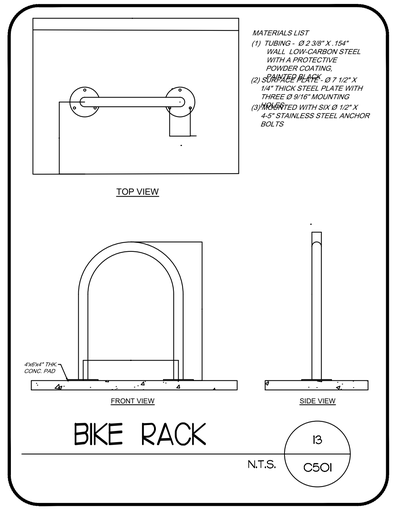

BIKE RACK

N.T.S.

13 / C501

NOT USED

N.T.S.

9 / C501

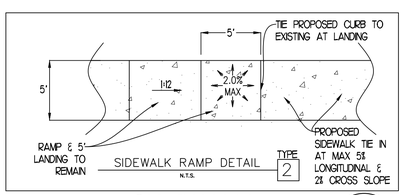

SIDEWALK RAMP DETAIL
N.T.S.
TYPE 2

SIDEWALK RAMP

12 / C501

SITE DETAILS

REVISIONS	BY

FREELAND and KAUFFMAN, INC.
Engineers * Landscape Architects
209 West Stone Avenue
Greenville, South Carolina 29609
864-233-5497
fax 864-233-8915

PROFESSIONAL ENGINEER No.13889119-2202 TODD BURNETT STATE OF UTAH
09/12/2024

CHILI'S GRILL & BAR
951 N MAIN STREET
TOOELE, UT 84074

BRINKER INTERNATIONAL
3000 OLYMPUS BLVD
DALLAS, TX 75019

DRAWN	JMD
CHECKED	TMB
DATE	09/12/2024
SCALE	AS SHOWN
DRAWING	C501

ISSUED FOR BID SEPTEMBER 12, 2024

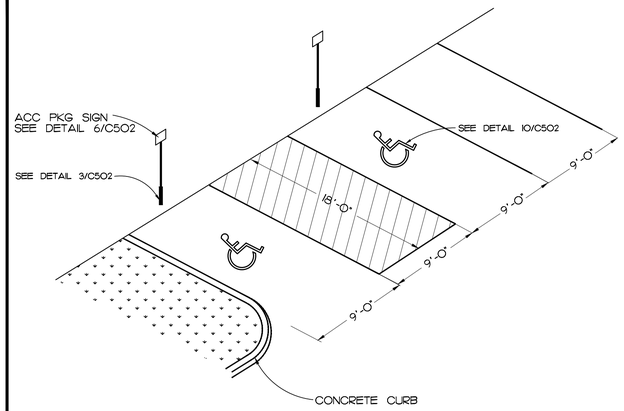

ADA PARKING (1 / C502)

NOT USED (2 / C502)
(N.T.S.)

ALL SIGNS SHALL COMPLY WITH U.S. DEPARTMENT OF TRANSPORTATION, FEDERAL HIGHWAY ADMINISTRATION'S MANUAL OF UNIFORM TRAFFIC CONTROL DEVICES, LOCAL CODES AND AS SPECIFIED. MOUNT SIGNS TO POST IN ACCORDANCE WITH MANUFACTURER'S INSTRUCTIONS.

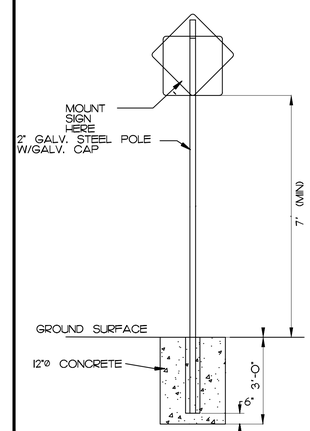

SIGN BASE (3 / C502)
N.T.S.

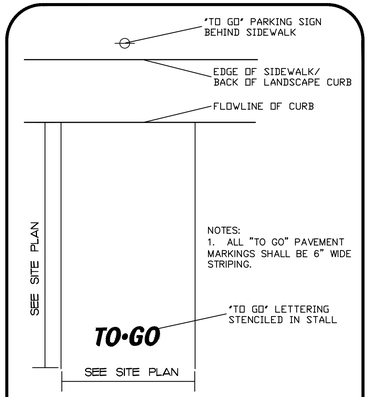

NOTES:
1. ALL "TO GO" PAVEMENT MARKINGS SHALL BE 6" WIDE STRIPING.

TO GO PARKING STALL (4 / C502)
N.T.S.

NOT USED (5 / C502)

NOT USED (8 / C501)
N.T.S.

NOT USED (10 / C502)

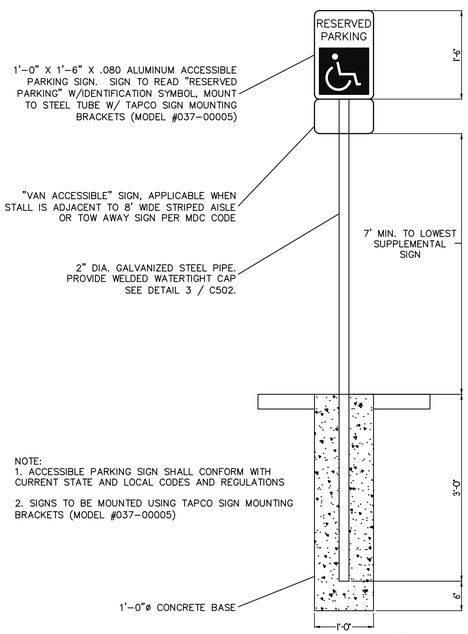

NOTE:
1. ACCESSIBLE PARKING SIGN SHALL CONFORM WITH CURRENT STATE AND LOCAL CODES AND REGULATIONS
2. SIGNS TO BE MOUNTED USING TAPCO SIGN MOUNTING BRACKETS (MODEL #037-00005)

ACCESSIBLE PARKING SIGN (6 / C502)

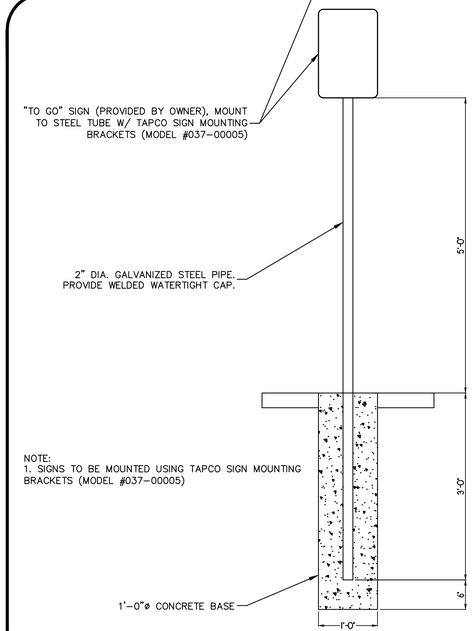

NOTE:
1. SIGNS TO BE MOUNTED USING TAPCO SIGN MOUNTING BRACKETS (MODEL #037-00005)

TO GO PARKING SIGN (7 / C502)
N.T.S.

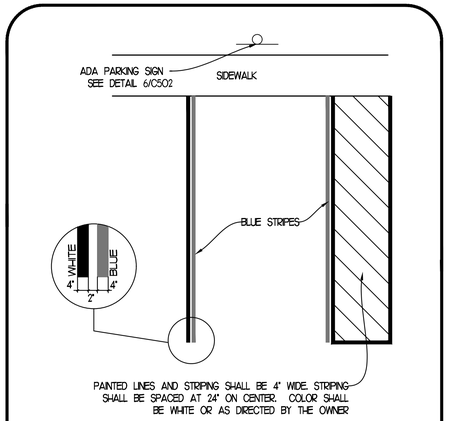

ADA PARKING STRIPING (9 / C502)

NOT USED (11 / C502)
N.T.S.

SITE DETAILS

ISSUED FOR BID SEPTEMBER 12, 2024

REVISIONS	BY

FREELAND and KAUFFMAN, INC.
Engineers * Landscape Architects
209 West Stone Avenue
Greenville, South Carolina 29609
864-233-5497
fax 864-233-8915

PROFESSIONAL ENGINEER No.13889119-2202 TODD BURNETT STATE OF UTAH
09/12/2024

CHILI'S GRILL & BAR
951 N MAIN STREET
TOOELE, UT 84074

BRINKER INTERNATIONAL
3000 OLYMPUS BLVD
DALLAS, TX 75019

DRAWN	JMD
CHECKED	TMB
DATE	09/12/2024
SCALE	AS SHOWN
DRAWING	C502

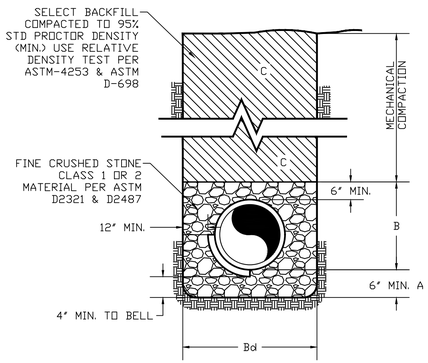

A. CRUSHED STONE BEDDING PLACED BEFORE PIPE IS LAID UP TO FLOW LINE OF PIPE (MIN. THICKNESS = 6")

B. CRUSHED STONE PLACED AFTER PIPE IS LAID FROM BOTTOM OF PIPE TO 6" ABOVE THE TOP OF PIPE.

Bd - TRENCH WIDTHS SHALL BE PIPE BELL O.D. + 12" OR IN ACCORDANCE WITH ASTM 2321 FOR PVC PIPE AND ASTM C12 (LATEST) FOR VITRIFIED CLAY PIPE.

IF Bd IS LESS THAN 30", D-1 SHALL BE SAND PASSING NO. 8 SIEVE

C. SELECT BACKFILL OR EXCAVATED MATERIAL BACKFILL COMPACTED TO 95% STANDARD PROCTOR ASTM D-4253 & ASTM D-698 (12" LIFTS, MECHANICAL COMPACTION). PLASTICITY INDEX TO BE MAX. 30.

FOR PIPES AND CONDUIT 6" OR LARGER IN NOMINAL DIAMETER, SHAPE BOTTOM OF TRENCH TO SUPPORT BOTTOM 90° OF PIPE CIRCUMFERENCE. FILL DEPRESSIONS WITH TAMPED SAND BACKFILL.

SANITARY SEWER (PRIVATE)

1 / C601

SCALE: N.T.S.

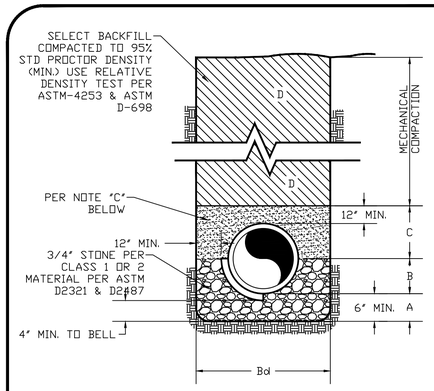

A. 3/4" STONE BEDDING PLACED BEFORE PIPE IS LAID UP TO FLOW LINE OF PIPE (MIN. THICKNESS = 6")

B. 3/4" STONE BEDDING PLACED BEFORE PIPE IS LAID UP TO SPRING LINE OF PIPE

Bd - TRENCH WIDTHS SHALL BE PIPE BELL O.D. + 12" OR IN ACCORDANCE WITH ASTM 2321 FOR PVC PIPE

IF Bd IS LESS THAN 30", D-1 SHALL BE SAND PASSING NO. 8 SIEVE

C. SAND BACKFILL PLACED FROM SPRING LINE OF PIPE TO 12" ABOVE TOP OF PIPE (6" LIFTS, HAND TAMPED, PASSING NO. 8 SIEVE).

D. SELECT BACKFILL OR EXCAVATED MATERIAL BACKFILL COMPACTED TO 95% STANDARD PROCTOR ASTM D-4253 & ASTM D-698 (12" LIFTS, MECHANICAL COMPACTION). PLASTICITY INDEX TO BE MAX. 30.

FOR PIPES AND CONDUIT LESS THAN 6" IN NOMINAL DIAMETER, AND FLAT BOTTOMED, MULTIPLE-DUCT CONDUIT UNITS, HAND-EXCAVATE TRENCH BOTTOMS AND SUPPORT PIPE AND CONDUIT ON AN UNDISTURBED SUBGRADE.

WATER LINE BEDDING DETAIL (PRIVATE)

2 / C601

SCALE: N.T.S.

NOT USED

(N.T.S.)

3 / C601

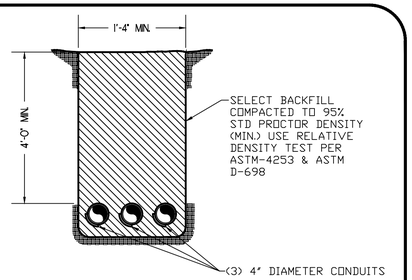

FOR PIPES AND CONDUIT LESS THAN 6" IN NOMINAL DIAMETER, AND FLAT BOTTOMED, MULTIPLE-DUCT CONDUIT UNITS, HAND-EXCAVATE TRENCH BOTTOMS AND SUPPORT PIPE AND CONDUIT ON AN UNDISTURBED SUBGRADE.

4" ELECTRICAL & TELEPHONE CONDUIT TRENCH SECTION

4 / C601

SCALE: N.T.S.

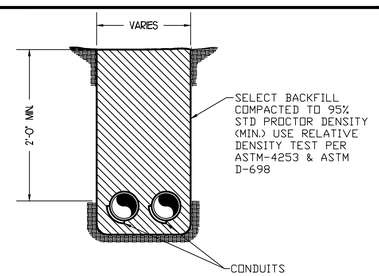

FOR PIPES AND CONDUIT LESS THAN 6" IN NOMINAL DIAMETER, AND FLAT BOTTOMED, MULTIPLE-DUCT CONDUIT UNITS, HAND-EXCAVATE TRENCH BOTTOMS AND SUPPORT PIPE AND CONDUIT ON AN UNDISTURBED SUBGRADE.

1" OR SMALLER ELECTRICAL CONDUIT TRENCH SECTION

5 / C601

SCALE: N.T.S.

NOT USED

N.T.S.

6 / C601

UTILITY DETAILS

REVISIONS	BY

FREELAND and KAUFFMAN, INC.
Engineers * Landscape Architects
209 West Stone Avenue
Greenville, South Carolina 29609
864-233-5497
fax 864-233-8915

PROFESSIONAL ENGINEER No.13859119-2202 TODD BURNETT STATE OF UTAH
09/12/2024

CHILI'S GRILL & BAR
951 N MAIN STREET
TOOELE, UT 84074

BRINKER INTERNATIONAL
3000 OLYMPUS BLVD
DALLAS, TX 75019

DRAWN	JMD
CHECKED	TMB
DATE	09/12/2024
SCALE	AS SHOWN
DRAWING	C601

ISSUED FOR BID SEPTEMBER 12, 2024

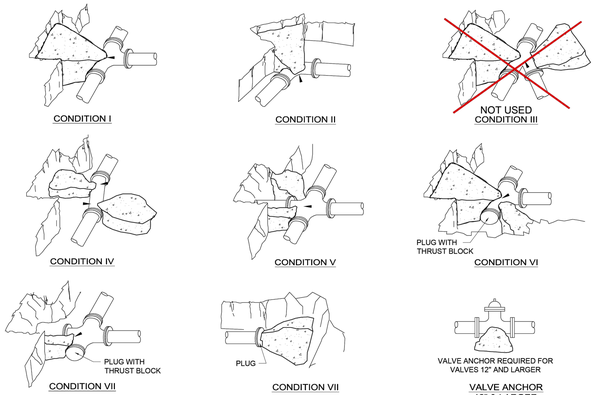

THRUST BLOCK BEARING AREA IN SQ. FEET								
PIPE SIZE (IN.)	CONDITION							
	I	II	III	IV	V	VI	VII	VIII
4	2.6	3.3	2.6	1.3	1.3	2.0	3.3	2.6
6	4.6	6.5	3.9	2.0	2.6	3.3	6.5	4.6
8	7.8	11.0	5.9	3.3	3.9	5.9	11.0	7.8
10	12.4	17.5	9.8	5.2	6.5	9.1	17.5	12.4
12	17.5	24.8	13.6	7.8	9.1	12.3	24.8	17.5
14	24.0	33.8	18.2	9.7	12.3	16.9	33.8	24.0
16	31.1	44.0	23.8	12.7	15.5	23.2	44.0	31.1
20	48.6	68.8	37.2	19.8	24.2	36.6	68.8	48.6
24	89.8	90.1	48.8	24.9	-	-	-	-

TYPICAL SECTION THROUGH THRUST BLOCK

NOTES:

1. ALL THRUST BLOCK BEARING FACES SHALL BE POURED AGAINST UNDISTURBED SOIL OR APPROVED COMPACTED BACKFILL.
2. CONCRETE CLASS 4000, APWA SECTION 03 30 04
3. ALL THRUST BLOCK SIDES SHALL BE FORMED.
4. CALCULATED ON 200 PSI TEST PRESSURE AND ALLOWABLE BEARING PRESSURE OF 2000 LBS. PER SQUARE FOOT.
5. IN POORER SOILS SPECIAL DESIGN IS REQUIRED.
6. USE MJ DUCTILE IRON RESTRAINED GLANDS AND CONCRETE THRUST BLOCKS.

THRUST BLOCK — N.T.S. — 1 / C602

Tooele City

STANDARD THRUST BLOCK DETAILS

Plan No. 561 R

1/2023

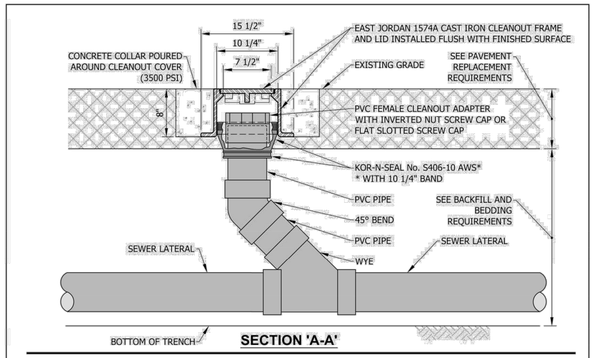

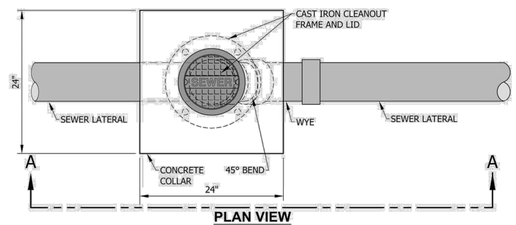

SANITARY SEWER CLEANOUT — N.T.S. — 2 / C602

Tooele City

SANITARY SEWER CLEANOUT IN PAVED AREAS

Plan No. 415.1

12/2021

NOT USED — N.T.S. — 3 / C602

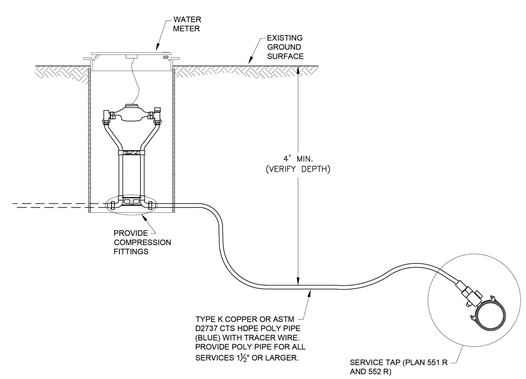

WATER SERVICE DETAIL — N.T.S. — 4 / C602

Tooele City

WATER SERVICE LINE

Plan No. 541 R

12/2023

UTILITY DETAILS

REVISIONS	BY

FREELAND and KAUFFMAN, INC.
Engineers * Landscape Architects
209 West Stone Avenue
Greenville, South Carolina 29609
864-233-5497
fax 864-233-8915

PROFESSIONAL ENGINEER No.13889119-2202 TODD BURNETT STATE OF UTAH

09/12/2024

CHILI'S GRILL & BAR
951 N MAIN STREET
TOOELE, UT 84074

BRINKER INTERNATIONAL
3000 OLYMPUS BLVD
DALLAS, TX 75019

DRAWN	JMD
CHECKED	TMB
DATE	09/12/2024
SCALE	AS SHOWN
DRAWING	C602

ISSUED FOR BID SEPTEMBER 12, 2024

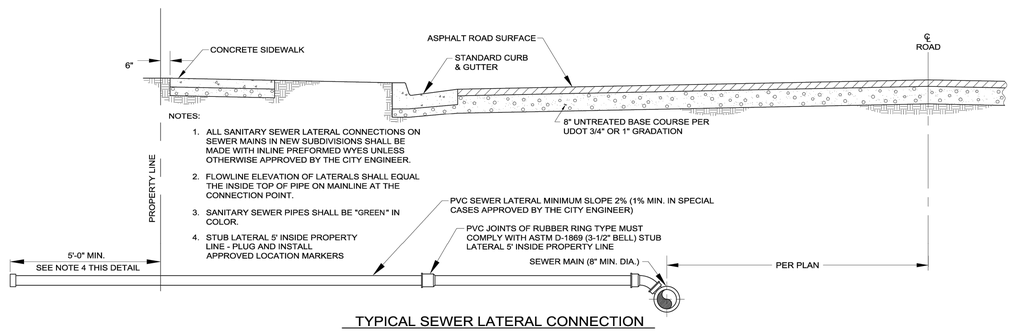

NOTES:

1. ALL SANITARY SEWER LATERAL CONNECTIONS ON SEWER MAINS IN NEW SUBDIVISIONS SHALL BE MADE WITH INLINE PREFORMED WYES UNLESS OTHERWISE APPROVED BY THE CITY ENGINEER.
2. FLOWLINE ELEVATION OF LATERALS SHALL EQUAL THE INSIDE TOP OF PIPE ON MAINLINE AT THE CONNECTION POINT.
3. SANITARY SEWER PIPES SHALL BE "GREEN" IN COLOR.
4. STUB LATERAL 5' INSIDE PROPERTY LINE - PLUG AND INSTALL APPROVED LOCATION MARKERS

TYPICAL SEWER LATERAL CONNECTION

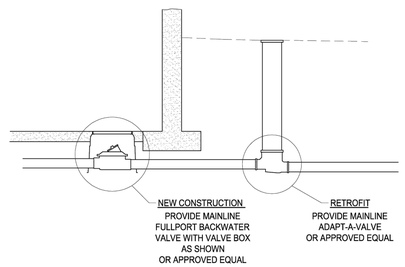

BACKFLOW PREVENTION

NOTE:
PVC PIPE AND FITTINGS ASTM D-3034 WITH A S.D.R. 35

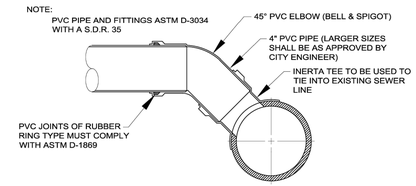

TAPPING INTO EXISTING PVC PIPE

Tooele City

SEWER LATERAL CONNECTION

Plan No.
431 R
8/2016

UTILITY DETAILS

REVISIONS	BY

FREELAND and KAUFFMAN, INC.
Engineers * Landscape Architects
209 West Stone Avenue
Greenville, South Carolina 29609
864-233-5497
fax 864-233-8915

PROFESSIONAL ENGINEER No.13889119-2202 TODD BURNETT STATE OF UTAH
09/12/2024

CHILI'S GRILL & BAR
951 N MAIN STREET
TOOELE, UT 84074

BRINKER INTERNATIONAL
3000 OLYMPUS BLVD
DALLAS, TX 75019

DRAWN	JMD
CHECKED	TMB
DATE	09/12/2024
SCALE	AS SHOWN
DRAWING	C603

ISSUED FOR BID SEPTEMBER 12, 2024

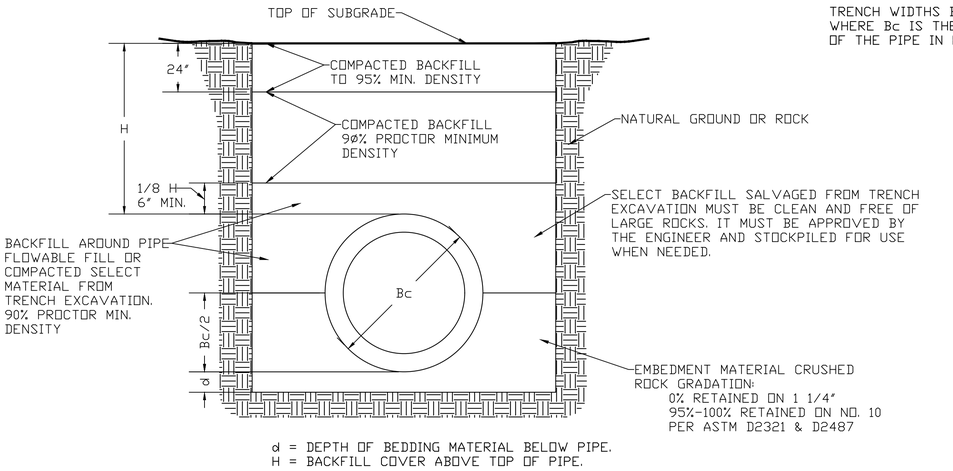

d = DEPTH OF BEDDING MATERIAL BELOW PIPE.
H = BACKFILL COVER ABOVE TOP OF PIPE.

NOTES:

TRENCH WIDTHS BASED ON 1.25 Bc+1.0 WHERE Bc IS THE OUTSIDE DIAMETER OF THE PIPE IN FEET.

PIPE DIAMETER (INCHES)	TRENCH WIDTH (FEET)
15	3.0
18	3.4
21	3.8
24	4.1
27	4.5
33	5.2
36	5.6
42	6.3
48	7.0
54	7.8
60	8.5
66	9.2
72	10.0
78	10.7
84	11.4
90	12.1
96	12.9

INSTALLATION WILL BE AS SHOWN OR AS DESCRIBED IN THE GENERAL SPECIFICATIONS FOR CONSTRUCTION

NOTES:

FOR H>10' DESIGN MUST BE CHECKED. UNLIMITED TRENCH WIDTH WILL NOT BE PERMITTED FOR CLASS III PIPE AND HIGHER TYPE PIPE EMBEDMENT MAY BE REQUIRED. TOP 24" OF BACKFILL MUST BE COMPACTED TO 95% DENSITY UNDER PAVEMENT. SUBGRADE STABILIZATION UNDER STREET PAVEMENT SHALL BE COMPACTED TO 98% STANDARD PROCTOR DENSITY AT + 2% OF OPTIMUM MOISTURE TO THE DEPTH SHOWN - ON THE PLANS AND IN ACCORDANCE WITH THE SPECIFICATIONS.

DEPTH OF BEDDING MATERIAL BELOW PIPE	
D (INSIDE DIAMETER)	d (MIN.)
27" OR SMALLER	4"
30" TO 60"	4"
66" & LARGER	6"

STORM SEWER RCP BEDDING DETAIL

1 / C611

SCALE: N.T.S.

NOT USED

(N.T.S.)

2 / C603

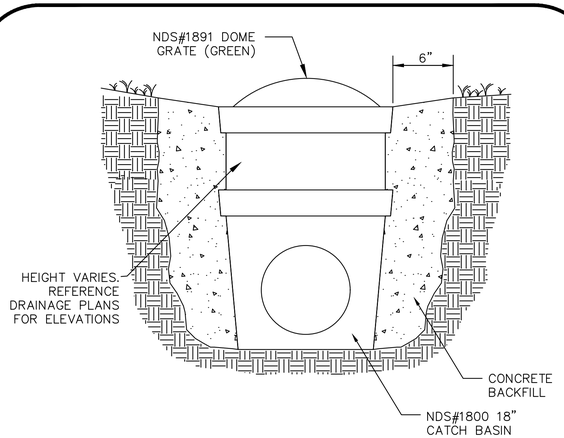

YARD INLET

(N.T.S.)

3 / C611

NOTES:
1. REGARDLESS OF DEPTH OF COVER, PIPE MUST BE SCHEDULE 40 PVC. REFER TO SPECIFICATIONS FOR ALLOWABLE PIPE TYPES.
2. A WATERTIGHT CONNECTION SHALL BE MAINTAINED WITH ANY TRANSITION FROM SCHEDULE 40 PVC PIPE TO ANY OTHER PIPE TYPE.
3. THE DOWNSPOUT COLLECTOR DRAIN SHALL BE INSTALLED BEFORE THE DOWNSPOUTS ARE INSTALLED

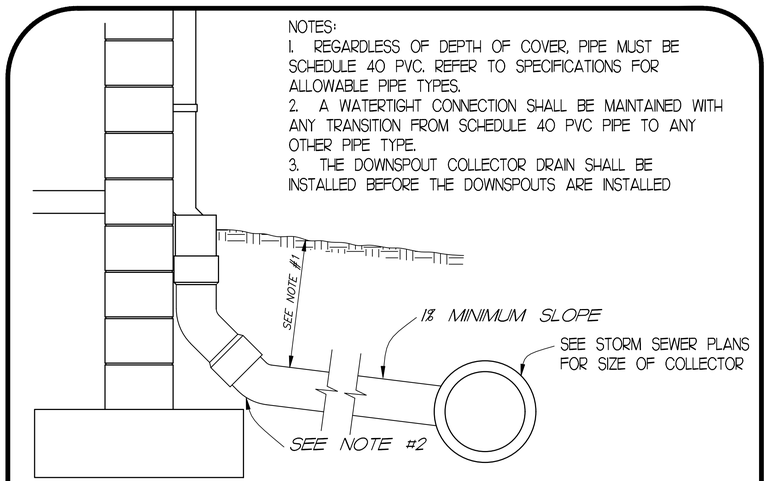

ROOF DRAIN CONNECTION

NOT TO SCALE

4 / C611

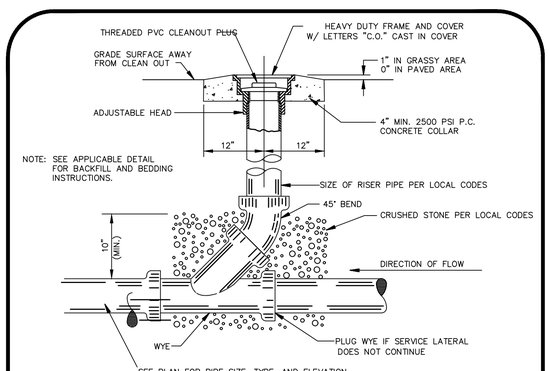

STORM CLEAN OUT

5 / C611

STORM DETAILS

REVISIONS	BY

FREELAND and KAUFFMAN, INC.
Engineers * Landscape Architects
209 West Stone Avenue
Greenville, South Carolina 29609
864-233-5497
fax 864-233-8915

PROFESSIONAL ENGINEER No.13889119-2202 TODD BURNETT STATE OF UTAH
09/12/2024

CHILI'S GRILL & BAR
951 N MAIN STREET
TOOELE, UT 84074
BRINKER INTERNATIONAL
3000 OLYMPUS BLVD
DALLAS, TX 75019

DRAWN	JMD
CHECKED	TMB
DATE	09/12/2024
SCALE	AS SHOWN
DRAWING	C611

ISSUED FOR BID SEPTEMBER 12, 2024

PROPERTY ACREAGE SUMMARY (IN ACRES)	
TOTAL PARCEL(S) AREA	1.27
ON-SITE DISTURBED AREA	0.27
OFF-SITE DISTURBED AREA	0.00
TOTAL DISTURBED AREA CHILI'S DEVELOPMENT ONLY	0.27
PERVIOUS AREA (POST-CONSTRUCTION) ON SITE ONLY	0.07
IMPERVIOUS AREA (POST-CONSTRUCTION) ON SITE ONLY	1.20

MAINTENANCE NOTES

1. THE OWNER, TENANT AND THER AGENT, IF ANY, SHALL BE JOINTLY AND SEVERALLY RESPONSIBLE FOR THE MAINTENANCE OF ALL LANDSCAPE.
2. ALL LANDSCAPE SHALL BE MAINTAINED IN A NEAT AND ORDERLY MANNER AT ALL TIMES. THIS SHALL INCLUDE MOWING, EDGING, PRUNING, FERTILIZING, WATERING, WEEDING AND OTHER SUCH ACTIVITIES COMMON TO LANDSCAPE MAINTENANCE.
3. ALL LANDSCAPE AREAS SHALL BE KEPT FREE OF TRASH, LITTER, WEEDS AND OTHER SUCH MATERIAL OR PLANTS NOT PART OF THIS PLAN.
4. ALL PLANT MATERIAL SHALL BE MAINTAINED IN A HEALTHY AND GROWING CONDITION AS IS APPROPRIATE FOR THE SEASON OF THE YEAR.
5. ALL PLANT MATERIAL WHICH DIES SHALL BE REPLACED WITH PLANT MATERIAL OF EQUAL OR BETTER VALUE.
6. CONTRACTOR SHALL PROVIDE SEPARATE BID PROPOSAL FOR ONE YEAR'S MAINTENANCE TO BEGIN AFTER FINAL ACCEPTANCE.

PLANT LIST

SYMBOL	NO.	SCIENTIFIC NAME	COMMON NAME	SIZE REQUIREMENTS	SPACING
SHRUBS					
HOL	13	ILEX CRENATA 'ANNY55' PPAF	LUSUS COMPACT JAPANESE HOLLY	10' MIN HT, FULL HGAL MIN	2' O.C.
BBL	44	LIRIOPE MUSCARI 'BIG BLUE'	BIG BLUE LIRIOPE	6" POTS	6" O.C. AS SHOWN
PD	62	DIANTHUS GRATIANOPOLITANUS "FIREWITCH"	FIREWITCH CHEDDAR PINK DIANTHUS	PINT, FULL	12" O.C.
TP	59	OENOTHERA CAESPITOSA "EVENING PRIMROSE"	TUFTED EVENING PRIMROSE	PINT	12" O.C.

BERMUDA GRASS SOD

RIVER ROCK MULCH

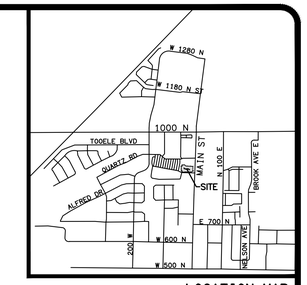

LOCATION MAP
N. T. S.

SOLID SEED/SOD NOTES

1. REFER TO GENERAL LAWN NOTES.
2. PLANT SOD BY HAND TO COVER INDICATED AREAS COMPLETELY. ENSURE EDGES OF SOD ARE TOUCHING. TOP DRESS JOINTS BY HAND WITH TOPSOIL TO FILL VOIDS.
3. ROLL GRASS AREAS TO ACHIEVE A SMOOTH, EVEN SURFACE, FREE FROM UNNATURAL UNDULATIONS.
4. WATER SOD THOROUGHLY AS SOD OPERATION PROGRESSES.
5. IF INSTALLATION OCCURS BETWEEN SEPTEMBER 1 AND MARCH 1, OVER-SEED THE SOD WITH WINTER RYEGRASS, AT A RATE OF FOUR (4) POUNDS PER ONE THOUSAND (1000) SQUARE FEET.
6. ALL LAWN AREAS TO BE SOLID SOD BERMUDA GRASS UNLESS OTHERWISE NOTED ON THE DRAWINGS.

EXISTING LANDSCAPING AROUND THE PERIMETER OF THE SITE TO REMAIN. LANDSCAPING CHANGES ON SITE TO INCLUDE NEW LANDSCAPING AROUND BUILDING AND SEEDING IN THE AREAS SHOWN.

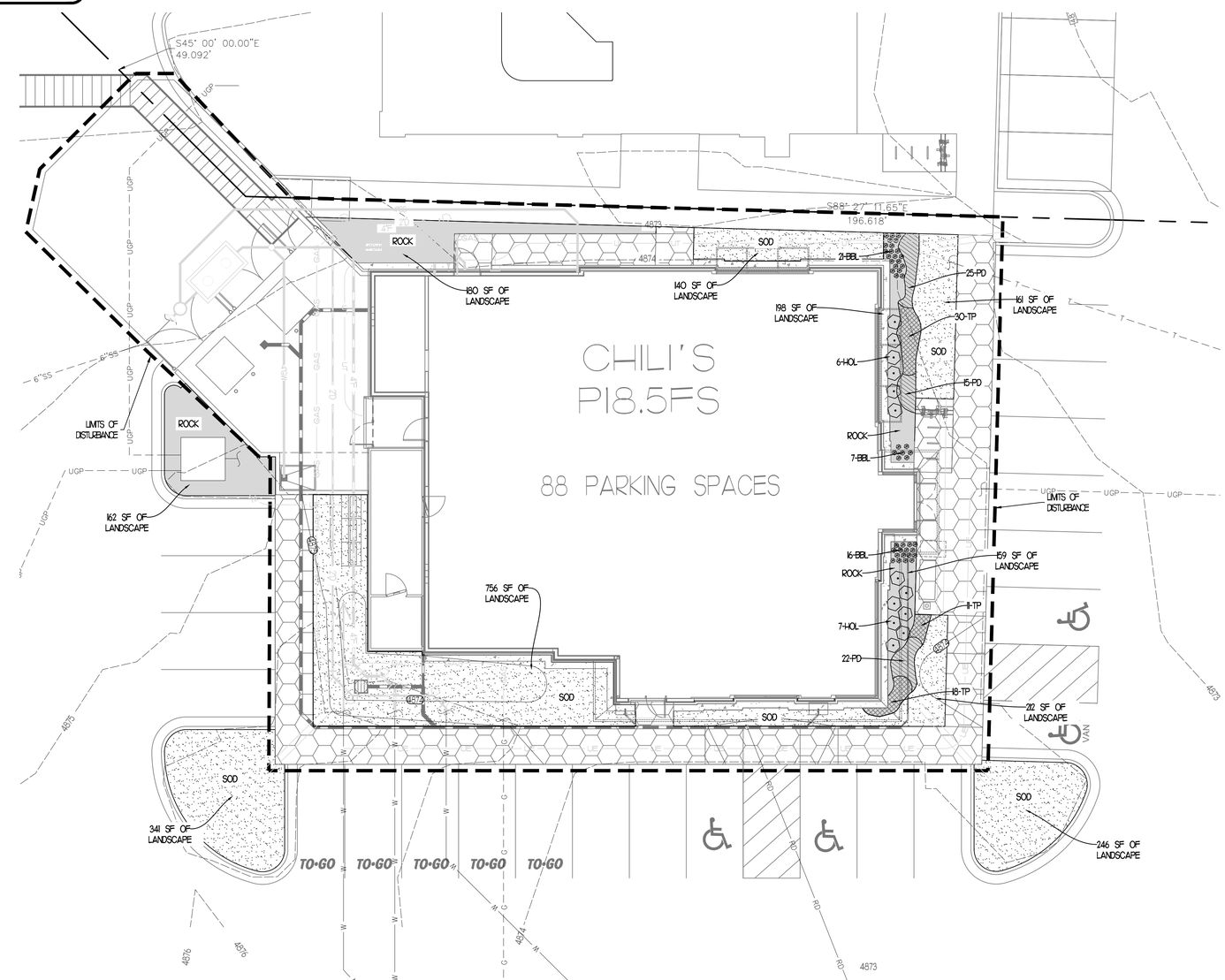

BRINKER INTERNATIONAL SPECIFICATIONS

1. ALL WORK SHALL BE LAID OUT BY LANDSCAPE CONTRACTOR FOR THE OWNER'S APPROVAL PRIOR TO INSTALLATION. ALL MATERIAL SHALL BE SUBJECT TO OWNER APPROVAL.
2. WRITTEN APPROVAL IS REQUIRED BY THE OWNER FOR ANY SUBSTITUTIONS OR CHANGES IN MATERIAL.
3. LANDSCAPE CONTRACTOR TO PROVIDE DAILY CLEANUP AND MAINTENANCE THROUGH COMPLETION.
4. THE LANDSCAPE CONTRACTOR SHALL TAKE ALL NECESSARY PRECAUTIONS TO PROTECT ANY EXISTING BUILDINGS OR STRUCTURES ON THE SITE AND SHALL BE HELD RESPONSIBLE FOR ANY DAMAGE CAUSED BY HIS WORK.
5. LANDSCAPE CONTRACTOR SHALL GUARANTEE ALL MATERIAL AND LABOR FOR (12) TWELVE MONTHS AFTER ACCEPTANCE OF PROJECT FOR MATERIAL EITHER DEAD OR NOT IN HEALTHY CONDITION. CONTRACTOR SHALL WATER ALL MATERIAL DURING PERIOD OF PROJECT.
6. IT SHALL BE THE RESPONSIBILITY OF LANDSCAPE CONTRACTOR TO PREVENT PLANTS FROM FALLING OR BEING BLOWN OVER AND TO STRAIGHTEN OR REPLANT ALL PLANTS WHICH ARE DAMAGED DUE TO LACK OF GUYING OR STAKING. PLANTS BLOWN OVER BY WIND SHALL NOT CAUSE ADDITIONAL EXPENSE TO THE OWNER BUT SHALL BE THE FINANCIAL RESPONSIBILITY OF THE LANDSCAPE CONTRACTOR.
7. LANDSCAPE CONTRACTOR SHALL NOT BE RESPONSIBLE AT ANY TIME TO REPLACE OR HONOR ANY WARRANTY FOR THE LOSS OF ANY TREE, PLANTS, GROUNDCOVER OR SOD DUE TO FIRES, FLOODS, FREEZING TEMPERATURES, LIGHTNING, WINDS IN EXCESS OF 50 MPH, OR ANY NATURAL DISASTER.
8. UNLESS OTHERWISE SPECIFIED ON THESE PLANS, THE LANDSCAPE CONTRACTOR SHALL BE RESPONSIBLE FOR THE FINE GRADING OF THE PLANTING OF ANY SODDED AREAS. FINE GRADING SHALL CONSIST OF THE FINAL 10 FOOT OF THE GRADE TO BE ACHIEVED.
9. TOPSOIL MATERIAL, WHEN CALLED FOR ON THE PLANS, SHALL BE FREE OF HARD CLODS, STIFF CLAY, HARD PAN, STONES LARGER THAN 3/4" DIAMETER, OBNOXIOUS WEEDS AND PLANTS, SOD, PARTIALLY DISINTEGRATED DEBRIS, INSECTS OR ANY OTHER UNDESIRABLE MATERIAL, PLANTS OR SEEDS THAT WOULD BE TOXIC OR HARMFUL TO PROPER GROWTH.
10. THE LANDSCAPE CONTRACTOR SHALL BE ADVISED OF THE EXISTENCE OF UNDERGROUND UTILITIES ON THE SITE. THEIR EXACT LOCATION SHALL BE VERIFIED IN THE FIELD WITH THE OWNER OR THE GENERAL CONTRACTOR PRIOR TO THE COMMENCEMENT OF ANY DIGGING OPERATIONS. IN THE EVENT THEY ARE UNCOVERED, THE LANDSCAPE CONTRACTOR SHALL PROMPTLY NOTIFY THE OWNER. THE LANDSCAPE CONTRACTOR SHALL BE RESPONSIBLE FOR ANY AND ALL DAMAGES TO UTILITIES AND SUCH DAMAGE SHALL NOT CAUSE ANY ADDITIONAL EXPENSE TO THE OWNER. ANY DAMAGE TO UNREPORTED LINES SHALL NOT BE THE RESPONSIBILITY OF THE LANDSCAPE CONTRACTOR.
11. LANDSCAPE CONTRACTOR SHALL PROVIDE PLANTED AND GUARANTEED UNIT PRICES FOR ALL WORK.
12. PLANT LIST QUANTITIES ARE PROVIDED AS AN AID TO BIDDERS ONLY. THE LANDSCAPE CONTRACTOR IS RESPONSIBLE FOR VERIFICATIONS OF PLANT MATERIAL QUANTITIES ON PLAN. IMPROPER PLANT COUNTS MADE BY THE LANDSCAPE CONTRACTOR SHALL BE NO CAUSE FOR ADDITIONAL EXPENSE TO THE OWNER.
13. PLANTS SHOULD CONFORM TO THE AMERICAN ASSOCIATION OF NURSERYMAN STANDARDS.
14. THE LANDSCAPE CONTRACTOR SHALL VERIFY THE COMPLIANCE OF LANDSCAPE PLANS WITH THE CITY REQUIREMENTS.
15. THE LANDSCAPE CONTRACTOR SHALL BE RESPONSIBLE FOR THE PROTECTION (WITH PHYSICAL BARRIERS) AND MAINTENANCE OF EXISTING AND TRANSPLANTED TREES DURING CONSTRUCTION (WHERE APPLICABLE).
16. THE LANDSCAPE CONTRACTOR SHALL ADJUST PLANTING AS NEEDED TO ALLOW FOR THE SCREENING OF PROPOSED ELECTRICAL TRANSFORMERS.
18. THE LANDSCAPE CONTRACTOR SHALL COORDINATE PLACEMENT OF PLANT MATERIAL WITH THE SITE AND BUILDING LIGHTING LOCATIONS AS PER ARCHITECTURAL PLANS.
19. LAWN AREAS TO BE SODDED SHALL BE RAKED FREE OF STONES AND DEBRIS. DEBRIS AND STONES OVER 3/4" IN DIAMETER SHALL BE REMOVED FROM THE SITE. ALL DAMAGED SOD WILL BE REJECTED. ALL SOD MUST BE PLACED WITH STAGGERED JOINTS, TIGHTLY BUTTED, WITH NO INEQUALITIES IN GRADE. PLACE ALL SOD IN ROWS AT RIGHT ANGLES TO SLOPES (WHERE APPLICABLE).

GENERAL NOTES

1. PLANTING LAYOUT, BASED ON PROTOTYPE LANDSCAPE PLAN, IS TO BE PROVIDED BY BRINKER INTERNATIONAL DESIGN DEPARTMENT.
2. FINAL LOCATION OF ALL PLANTING SHALL BE DETERMINED IN THE FIELD BY THE OWNER'S CONSTRUCTION MANAGER.
3. ANY MODIFICATIONS TO PLANTING LAYOUT, PLANT MATERIALS, ETC. SHALL BE APPROVED BY THE OWNER'S CONSTRUCTION MANAGER PRIOR TO EXECUTION.
4. ALL AREAS TO BE IRRIGATED BY AN AUTOMATIC IRRIGATION SYSTEM WITH TIME CLOCK. LANDSCAPE CONTRACTOR TO VERIFY AND ADJUST FOR ANY SITE VISIBILITY ANGLES.

EVERY DIGGING JOB REQUIRES A CALL – EVEN SMALL PROJECTS LIKE PLANTING TREES OR SHRUBS. IF YOU HIT AN UNDERGROUND UTILITY LINE WHILE DIGGING, YOU CAN HARM YOURSELF OR THOSE AROUND YOU, DISRUPT SERVICE TO AN ENTIRE NEIGHBORHOOD AND POTENTIALLY BE RESPONSIBLE FOR FINES AND REPAIR COSTS.

SMART DIGGING MEANS CALLING 811 BEFORE EACH JOB, WHETHER YOU ARE A HOMEOWNER OR A PROFESSIONAL EXCAVATOR, ONE CALL TO 811 GETS YOUR UNDERGROUND UTILITY LINES MARKED FOR FREE.

LANDSCAPE PLAN

SCALE 1" = 10'

REVISIONS	BY

FREELAND and KAUFFMAN, INC.
Engineers * Landscape Architects
209 West Stone Avenue
Greenville, South Carolina 29609
864-233-5497
fax 864-233-8915

PROFESSIONAL ENGINEER No.13889119-2202 TODD BURNETT STATE OF UTAH
09/12/2024

CHILI'S GRILL & BAR
951 N MAIN STREET
TOOELE, UT 84074
BRINKER INTERNATIONAL
3000 OLYMPUS BLVD
DALLAS, TX 75019

DRAWN	JMD
CHECKED	TMB
DATE	09/12/2024
SCALE	AS SHOWN
DRAWING	L101

ISSUED FOR BID SEPTEMBER 12, 2024

SECTION 02900 - LANDSCAPE

PART 1 - GENERAL

1.1 REFERENCED DOCUMENTS

REFER TO LANDSCAPE PLANS, NOTES, DETAILS, BIDDING REQUIREMENTS, SPECIAL PROVISIONS, AND SCHEDULES FOR ADDITIONAL REQUIREMENTS.

1.2 DESCRIPTION OF WORK

WORK INCLUDED: FURNISH ALL SUPERVISION, LABOR, MATERIALS, SERVICES, EQUIPMENT AND APPLIANCES REQUIRED TO COMPLETE THE WORK COVERED IN CONJUNCTION WITH THE LANDSCAPING COVERED IN THESE SPECIFICATIONS AND LANDSCAPING PLANS, INCLUDING:

1. PLANTING (TREES, SHRUBS AND GRASSES)
2. BED PREPARATION AND FERTILIZATION
3. NOTIFICATION OF SOURCES
4. WATER AND MAINTENANCE UNTIL FINAL ACCEPTANCE
5. GUARANTEE

1.3 REFERENCE STANDARDS

A. AMERICAN STANDARD FOR NURSERY STOCK PUBLISHED BY AMERICAN ASSOCIATION OF NURSERYMEN: 27 OCTOBER 1980, EDITION, BY AMERICAN NATIONAL STANDARDS INSTITUTE, INC. (Z60.1) - PLANT MATERIAL

B. AMERICAN JOINT COMMITTEE ON HORTICULTURAL NOMENCLATURE: 1942 EDITION OF STANDARDIZED PLANT NAMES.

C. TEXAS ASSOCIATION OF NURSERYMEN, GRADES AND STANDARDS

D. HORTIS THIRD, 1976 - CORNELL UNIVERSITY

1.4 NOTIFICATION OF SOURCES AND SUBMITTALS

A. THE CONTRACTOR SHALL, WITHIN TEN (10) DAYS FOLLOWING ACCEPTANCE OF BID, NOTIFY THE LANDSCAPE ARCHITECT / OWNER OF THE SOURCES OF PLANT MATERIALS AND BED PREPARATION REQUIRED FOR THE PROJECT.

B. SAMPLES: PROVIDE REPRESENTATIVE QUANTITIES OF SANDY LOAM SOIL, MULCH, BED MIX MATERIAL, GRAVEL, AND CRUSHED STONE. SAMPLES SHALL BE APPROVED BY LANDSCAPE ARCHITECT BEFORE USE ON THE PROJECT.

C. PRODUCT DATA: SUBMIT COMPLETE PRODUCT DATA AND SPECIFICATIONS ON ALL OTHER SPECIFIED MATERIALS.

D. SUBMIT THREE REPRESENTATIVE SAMPLES OF EACH VARIETY OF ORNAMENTAL TREES, SHRUBS AND GROUNDCOVER PLANTS FOR LANDSCAPE ARCHITECT'S APPROVAL. WHEN APPROVED, TAG, INSTALL, AND MAINTAIN AS REPRESENTATIVE SAMPLES FOR FINAL INSTALLED PLANT MATERIALS.

E. FILE CERTIFICATES OF INSPECTION OF PLANT MATERIAL BY STATE, COUNTY AND FEDERAL AUTHORITIES WITH LANDSCAPE ARCHITECT, IF REQUIRED.

F. SOIL ANALYSIS: PROVIDE SANDY LOAM SOIL ANALYSIS IF REQUESTED BY THE LANDSCAPE ARCHITECT.

1.5 JOB CONDITIONS

A. GENERAL CONTRACTOR TO COMPLETE THE FOLLOWING PUNCH LIST: PRIOR TO LANDSCAPE CONTRACTOR INITIATING ANY PORTION OF LANDSCAPE INSTALLATION, GENERAL CONTRACTOR SHALL LEAVE PLANTING BED AREAS THREE (3") INCHES BELOW FINAL FINISH GRADE OF SIDEWALKS, DRIVES AND CURBS AS SHOWN ON THE DRAWINGS. ALL LAWN AREAS TO RECEIVE SOLID SOD SHALL BE LEFT ONE (1") INCH BELOW THE FINAL FINISH GRADE OF SIDEWALKS, DRIVES AND CURBS. ALL CONSTRUCTION DEBRIS SHALL BE REMOVED PRIOR TO LANDSCAPE CONTRACTOR BEGINNING ANY WORK.

B. GENERAL CONTRACTOR SHALL PROVIDE TOPSOIL AS DESCRIBED IN SECTION 02200 - EARTHWORK.

C. STORAGE OF MATERIALS AND EQUIPMENT AT THE JOB SITE WILL BE AT THE RISK OF THE LANDSCAPE CONTRACTOR. THE OWNER CANNOT BE HELD RESPONSIBLE FOR THEFT OR DAMAGE.

1.6 MAINTENANCE AND GUARANTEE

A. MAINTENANCE:

1. THE LANDSCAPE CONTRACTOR SHALL BE HELD RESPONSIBLE FOR THE MAINTENANCE OF ALL WORK FROM THE TIME OF PLANTING UNTIL FINAL ACCEPTANCE BY THE OWNER. NO TREES, SHRUBS, GROUNDCOVER OR GRASS WILL BE ACCEPTED UNLESS THEY SHOW HEALTHY GROWTH AND SATISFACTORY FOLIAGE CONDITIONS.

2. MAINTENANCE SHALL INCLUDE WATERING OF TREES AND PLANTS, CULTIVATION, WEEDING SPRAYING, EDGING, PRUNING OF TREES, MOWING OF GRASS, CLEANING UP AND ALL OTHER WORK NECESSARY OF MAINTENANCE.

3. A WRITTEN NOTICE REQUESTING FINAL INSPECTION AND ACCEPTANCE SHOULD BE SUBMITTED TO THE OWNER AT LEAST SEVEN (7) DAYS PRIOR TO COMPLETION. AN ON-SITE INSPECTION BY THE OWNER AND LANDSCAPE CONTRACTOR WILL BE COMPLETED PRIOR TO WRITTEN ACCEPTANCE.

4. AFTER FINAL ACCEPTANCE OF INSTALLATION, THE LANDSCAPE CONTRACTOR WILL NOT BE REQUIRED TO DO ANY OF THE ABOVE LISTED WORK.

5. CONTRACTOR SHALL PROVIDE SEPARATE BID PROPOSAL FOR ONE YEAR'S MAINTENANCE TO BEGIN AFTER FINAL ACCEPTANCE.

B. GUARANTEE:

1. TREES, SHRUBS AND GROUNDCOVER SHALL BE GUARANTEED FOR A TWELVE (12) MONTH PERIOD AFTER FINAL ACCEPTANCE. THE CONTRACTOR SHALL REPLACE ALL DEAD MATERIALS AS SOON AS WEATHER PERMITS AND UPON NOTIFICATION OF THE OWNER. PLANTS, INCLUDING TREES, WHICH HAVE PARTIALLY DIED SO THAT SHAPE, SIZE, OR SYMMETRY HAS BEEN DAMAGED, SHALL BE CONSIDERED SUBJECT TO REPLACEMENT. IN SUCH CASES, THE OPINION OF THE OWNER SHALL BE FINAL.

a. PLANTS USED FOR REPLACEMENT SHALL BE OF THE SAME SIZE AND KIND AS THOSE ORIGINALLY PLANTED AND SHALL BE PLANTED AS ORIGINALLY SPECIFIED. ALL WORK, INCLUDING MATERIALS, LABOR AND EQUIPMENT USED IN REPLACEMENTS, SHALL CARRY A TWELVE (12) MONTH GUARANTEE. ANY DAMAGE, INCLUDING RUTS IN LAWN OR BED AREAS, INCURRED AS A RESULT OF MAKING REPLACEMENTS SHALL BE IMMEDIATELY REPAIRED.

b. AT THE DIRECTION OF THE OWNER, PLANTS MAY BE REPLACED AT THE START OF THE NEXT YEAR'S PLANTING SEASON. IN SUCH CASES, DEAD PLANTS SHALL BE REMOVED FROM THE PREMISES IMMEDIATELY.

c. WHEN PLANT REPLACEMENTS ARE MADE, PLANTS, SOIL MIX, FERTILIZER AND MULCH ARE TO BE UTILIZED AS ORIGINALLY SPECIFIED AND RE-INSPECTED FOR FULL COMPLIANCE WITH THE CONTRACT REQUIREMENTS. ALL REPLACEMENTS ARE TO BE INCLUDED UNDER "WORK" OF THIS SECTION.

2. THE OWNER AGREES THAT FOR THE GUARANTEE TO BE EFFECTIVE, HE WILL WATER PLANTS AT LEAST TWICE A WEEK DURING DRY PERIODS AND CULTIVATE BEDS ONCE A MONTH AFTER FINAL ACCEPTANCE.

3. THE ABOVE GUARANTEE SHALL NOT APPLY WHERE PLANTS DIE AFTER ACCEPTANCE BECAUSE OF INJURY FROM STORMS, HAIL, FREEZE, INSECTS, DISEASES, INJURY BY HUMANS, MACHINES OR THEFT.

4. ACCEPTANCE FOR ALL LANDSCAPE WORK SHALL BE GIVEN AFTER FINAL INSPECTION BY THE OWNER PROVIDED THE JOB IS IN A COMPLETE, UNDAMAGED CONDITION AND THERE IS A STAND OF GRASS IN ALL LAWN AREAS. AT THAT TIME, THE OWNER WILL ASSUME MAINTENANCE ON THE ACCEPTED WORK.

C. REPAIRS: ANY NECESSARY REPAIRS UNDER THE GUARANTEE MUST BE MADE WITHIN TEN (10) DAYS AFTER RECEIVING NOTICE, WEATHER PERMITTING. IN THE EVENT THE LANDSCAPE CONTRACTOR DOES NOT MAKE REPAIRS ACCORDINGLY, THE OWNER, WITHOUT FURTHER NOTICE TO CONTRACTOR, MAY PROVIDE MATERIALS AND MEN TO MAKE SUCH REPAIRS AT THE EXPENSE TO THE LANDSCAPE CONTRACTOR.

1.7 QUALITY ASSURANCE

A. GENERAL: COMPLY WITH APPLICABLE FEDERAL, STATE, COUNTY AND LOCAL REGULATIONS GOVERNING LANDSCAPE MATERIALS AND WORK.

B. PERSONNEL: EMPLOY ONLY EXPERIENCED PERSONNEL WHO ARE FAMILIAR WITH THE REQUIRED WORK. PROVIDE FULL TIME SUPERVISION BY A QUALIFIED FOREMAN ACCEPTABLE TO LANDSCAPE ARCHITECT.

C. SELECTION OF PLANT MATERIAL:

1. MAKE CONTACT WITH SUPPLIERS IMMEDIATELY UPON OBTAINING NOTICE OF CONTRACT ACCEPTANCE TO SELECT AND BOOK MATERIALS. DEVELOP A PROGRAM OF MAINTENANCE (PRUNING AND FERTILIZATION) WHICH WILL ENSURE THE PURCHASED MATERIALS WILL MEET AND / OR EXCEED PROJECT SPECIFICATIONS.

2. SUBSTITUTIONS: DO NOT MAKE PLANT MATERIAL SUBSTITUTIONS. IF THE SPECIFIED LANDSCAPE MATERIAL IS NOT OBTAINABLE, SUBMIT PROOF OF NON-AVAILABILITY TO LANDSCAPE ARCHITECT, TOGETHER WITH PROPOSAL FOR USE OF EQUIVALENT MATERIAL. AT THE TIME BIDS ARE SUBMITTED, THE CONTRACTOR IS ASSUMED TO HAVE LOCATED THE MATERIALS NECESSARY TO COMPLETE THE JOB AS SPECIFIED.

3. LANDSCAPE ARCHITECT WILL PROVIDE A KEY IDENTIFYING EACH TREE LOCATION ON SITE. WRITTEN VERIFICATION WILL BE REQUIRED TO DOCUMENT MATERIAL SELECTION, SOURCE AND DELIVERY SCHEDULES TO SITE.

4. MEASUREMENTS: MEASURE TREES WITH BRANCHES AND TRUNKS OR CANES IN THEIR NORMAL POSITION. DO NOT PRUNE TO OBTAIN REQUIRED SIZES. TAKE CALIPER MEASUREMENTS SIX INCHES ABOVE GROUND FOR TREES UP TO AND INCLUDING 4" CALIPER SIZE, AND TWELVE INCHES ABOVE GROUND FOR LARGER SIZES. MEASURE MAIN BODY OF ALL PLANT MATERIAL OF HEIGHT AND SPREAD DIMENSIONS, DO NOT MEASURE FROM BRANCH OR ROOT TIP-TO-TIP.

5. OWNER AND / OR LANDSCAPE ARCHITECT SHALL INSPECT ALL PLANT MATERIAL WITH REQUIREMENTS FOR GENUS, SPECIES, CULTIVAR / VARIETY SIZE AND QUALITY.

6. OWNER AND / OR LANDSCAPE ARCHITECT RETAINS THE RIGHT TO FURTHER INSPECT ALL PLANT MATERIAL UPON ARRIVAL TO THE SITE AND DURING INSTALLATION FOR SIZE AND CONDITION OF ROOT BALLS AND ROOT SYSTEMS, LIMBS, BRANCHING HABIT, INSECTS, INJURIES AND LATENT DEFECTS.

7. OWNER AND / OR LANDSCAPE ARCHITECT MAY REJECT UNSATISFACTORY OR DEFECTIVE MATERIAL AT ANY TIME DURING THE PROCESS WORK. REMOVE REJECTED MATERIALS IMMEDIATELY FROM THE SITE AND REPLACE WITH ACCEPTABLE MATERIAL AT NO ADDITIONAL COST TO THE OWNER. PLANTS DAMAGED IN TRANSIT OR AT JOB SITE SHALL BE REJECTED.

1.8 PRODUCT DELIVERY, STORAGE AND HANDLING

A. PREPARATION:

1. BALLED AND BURLAPPED (B&B) PLANTS: DIG AND PREPARE SHIPMENT IN A MANNER THAT WILL NOT DAMAGE ROOTS, BRANCHES, SHAPE AND FUTURE DEVELOPMENT.

2. CONTAINER GROWN PLANTS: DELIVER PLANTS IN RIGID CONTAINER TO HOLD BALL SHAPE AND PROTECT ROOT MASS.

B. DELIVERY:

1. DELIVER PACKAGED MATERIALS IN SEALED CONTAINERS SHOWING WEIGHT, ANALYSIS AND NAME OF MANUFACTURER. PROTECT MATERIALS FROM DETERIORATION DURING DELIVERY AND WHILE STORED ON SITE.

2. DELIVER ONLY PLANT MATERIALS THAT CAN BE PLANTED IN ONE DAY UNLESS ADEQUATE STORAGE AND WATERING FACILITIES ARE AVAILABLE ON JOB SITE.

3. PROTECT ROOT BALLS BY HEELING IN WITH SAWDUST OR OTHER APPROVED MOISTURE RETAINING MATERIAL IF NOT PLANTED WITHIN 24 HOURS OF DELIVERY.

4. PROTECT PLANTS DURING DELIVERY TO PREVENT DAMAGE TO ROOT BALLS OR DESICCATION OF LEAVES. KEEP PLANTS MOIST AT ALL TIMES. COVER ALL MATERIALS DURING TRANSPORT.

5. NOTIFY LANDSCAPE ARCHITECT OF DELIVERY SCHEDULE 72 HOURS IN ADVANCE JOB SITE.

6. REMOVE REJECTED PLANT MATERIAL IMMEDIATELY FROM JOB SITE.

7. TO AVOID DAMAGE OR STRESS, DO NOT LIFT, MOVE, ADJUST TO PLUMB, OR OTHERWISE MANIPULATE PLANTS BY TRUNK OR STEMS.

PART 2 - PRODUCTS

2.1 PLANTS

A. GENERAL: WELL-FORMED NO. 1 GRADE OR BETTER NURSERY GROWN STOCK. LISTED PLANT HEIGHTS ARE FROM TOPS OF ROOT BALLS TO NOMINAL TOPS OF PLANTS. PLANT SPREAD REFERS TO NOMINAL OUTER WIDTH OF THE PLANT, NOT TO THE OUTER LEAF TIPS. PLANTS WILL BE INDIVIDUALLY APPROVED BY THE LANDSCAPE ARCHITECT AND HIS DECISION AS TO THEIR ACCEPTABILITY SHALL BE FINAL.

B. QUANTITIES: THE DRAWINGS AND SPECIFICATIONS ARE COMPLIMENTARY. ANYTHING CALLED FOR ON ONE AND NOT THE OTHER IS AS BINDING AS IF SHOWN AND CALLED FOR ON BOTH. THE PLANT SCHEDULE IS AN AID TO BIDDERS ONLY. CONFIRM ALL QUANTITIES ON PLAN.

C. QUALITY AND SIZE: PLANT MATERIALS SHALL CONFORM TO THE SIZE GIVEN ON THE PLAN, AND SHALL BE HEALTHY, SYMMETRICAL, WELL-SHAPED, FULL BRANCHED AND WELL ROOTED. THE PLANTS SHALL BE FREE FROM INJURIOUS INSECTS, DISEASES, INJURIES TO THE BARK OR ROOTS, BROKEN BRANCHES, OBJECTIONABLE DISFIGUREMENTS, INSECT EGGS AND LARVAE, AND ARE TO BE OF SPECIMEN QUALITY.

D. APPROVAL: ALL PLANT MATERIALS SHALL BE SUBJECT TO APPROVAL BY THE OWNER. ALL PLANTS WHICH ARE FOUND UNSUITABLE IN GROWTH, OR ARE IN ANY UNHEALTHY, BADLY SHAPED OR UNDERSIZED CONDITION WILL BE REJECTED BY THE LANDSCAPE ARCHITECT EITHER BEFORE OR AFTER PLANTING AND SHALL BE REMOVED AT THE EXPENSE OF THE LANDSCAPE CONTRACTOR AND REPLACED WITH ACCEPTABLE PLANTS AS SPECIFIED AT NO ADDITIONAL COST TO THE OWNER.

E. TREES SHALL BE HEALTHY, FULL-BRANCHED, WELL-SHAPED AND SHALL MEET THE TRUNK DIAMETER AND HEIGHT REQUIREMENTS OF THE PLANT SCHEDULE. BALLS SHALL BE FIRM, NEAT, SLIGHTLY TAPERED AND WELL WRAPPED IN BURLAP. ANY TREE LOOSE IN THE BALL OR WITH A BROKEN ROOT BALL AT TIME OF PLANTING WILL BE REJECTED. BALLS SHALL BE TEN (10") INCHES IN DIAMETER FOR EACH ONE (1") INCH OF TRUNK DIAMETER, MEASURED SIX (6") INCHED ABOVE BALL.(NOMENCLATURE CONFORMS TO THE CUSTOMARY NURSERY USAGE: FOR CLARIFICATION, THE TERM "MULTI-TRUNK" DEFINES A PLANT HAVING THREE (3) OR MORE TRUNKS OF NEARLY EQUAL DIAMETER.)

F. PRUNING: ALL PRUNING OF TREES AND SHRUBS, AS DIRECTED BY THE LANDSCAPE ARCHITECT PRIOR TO FINAL ACCEPTANCE, SHALL BE EXECUTED BY THE LANDSCAPE CONTRACTOR AT NO ADDITIONAL COST TO THE OWNER.

2.2 SOIL PREPARATION MATERIALS

A. SANDY LOAM:

1. FRIABLE, FERTILE, DARK, LOAMY SOIL, FREE OF CLAY LUMPS, SUBSOIL, STONES AND OTHER EXTRANEOUS MATERIAL AND REASONABLY FREE OF WEEDS AND FOREIGN GRASSES. LOAM CONTAINING DALLASGRASS OR NUTGRASS SHALL BE REJECTED.

1. PHYSICAL PROPERTIES AS FOLLOWS:
CLAY - BETWEEN 7-27 PERCENT
SILT - BETWEEN 15-25 PERCENT
SAND - LESS THAN 52 PERCENT

2. ORGANIC MATTER SHALL BE 3%-10% OF TOTAL DRY WEIGHT.

4. IF REQUESTED, LANDSCAPE CONTRACTOR SHALL PROVIDE A CERTIFIED SOIL ANALYSIS CONDUCTED BY AN APPROVED SOIL TESTING LABORATORY VERIFYING THAT SANDY LOAM MEETS THE ABOVE REQUIREMENTS.

B. ORGANIC MATERIAL: COMPOST WITH A MIXTURE OF 80% VEGETATIVE MATTER AND 20% ANIMAL WASTE. INGREDIENTS SHOULD BE A MIX OF COURSE AND FINE TEXTURED MATERIAL.

C. PREMIXED BEDDING SOIL AS SUPPLIED BY VITAL EARTH RESOURCES, GLADEWATER, TEXAS, PROFESSIONAL BEDDING SOIL AS SUPPLIED BY LIVING EARTH TECHNOLOGY, DALLAS, TEXAS OR ACID GRO MUNICIPAL MIX AS SUPPLIED BY SOIL BUILDING SYSTEMS, DALLAS, TEXAS OR APPROVED EQUAL.

D. SHARP SAND: SHARP SAND MUST BE FREE OF SEEDS, SOIL PARTICLES AND WEEDS.

E. MULCH: DOUBLE SHREDDED HARDWOOD MULCH, PARTIALLY DECOMPOSED, DARK BROWN. LIVING EARTH TECHNOLOGIES OR APPROVED EQUAL.

F. ORGANIC FERTILIZER: FERTILAID, SUSTANE, OR GREEN SENSE OR EQUAL AS RECOMMENDED FOR REQUIRED APPLICATIONS. FERTILIZER SHALL BE DELIVERED TO THE SITE IN ORIGINAL UNOPENED CONTAINERS, EACH BEARING THE MANUFACTURER'S GUARANTEED STATEMENT OF ANALYSIS.

G. COMMERCIAL FERTILIZER: 10-20-10 OR SIMILAR ANALYSIS. NITROGEN SOURCE TO BE A MINIMUM 50% SLOW RELEASE ORGANIC NITROGEN (SCU OR UF) WITH A MINIMUM 8% SULFUR AND 4% IRON, PLUS MICRONUTRIENTS.

H. PEAT: COMMERCIAL SPHAGNUM PEAT MOSS OR PARTIALLY DECOMPOSED SHREDDED PINE BARK OR OTHER APPROVED ORGANIC MATERIAL.

2.3 MISCELLANEOUS MATERIALS

A. STEEL EDGING: SHALL BE RYERSON "ESTATE CURBING", 1/8" X 4" WITH STAKES 4' ON CENTER.

B. STAKING MATERIAL FOR SHADE TREES:

1. POST: STUDDED T-POST, #1 ARMCO WITH ANCHOR PLATE, 6'-06 LENGTH, PAINT GREEN.

2. WIRE: 12 GAUGE, SINGLE STRAND, GALVANIZED WIRE.

3. RUBBER HOSE: 2 PLY, FIBER REINFORCED HOSE, MINIMUM 1 INCH INSIDE DIAMETER. COLOR: BLACK.

C. GRAVEL: WASHED NATIVE PEA GRAVEL, GRADED 1 INCH TO 1-1/2 INCH.

D. FILTER FABRIC: 'MIRAFI MIRASCAPE' BY MIRIFI CONSTRUCTION PRODUCTS AVAILABLE AT LONE STAR PRODUCTS, INC., (469) 523-0444 OR APPROVED EQUAL.

E. RIVER ROCK: 'COLORADO' OR NATIVE RIVER ROCK, 2" - 4" DIA.

F. DECOMPOSED GRANITE: BASE MATERIAL SHALL CONSIST OF A NATURAL MATERIAL MIX OF GRANITE AGGREGATE NOT TO EXCEED 1/8" DIAMETER IN SIZE AND SHALL BE COMPOSED OF VARIOUS STAGES OF DECOMPOSED EARTH BASE.

PART 3 - EXECUTION

3.1 BED PREPARATION & FERTILIZATION

A. LANDSCAPE CONTRACTOR TO INSPECT ALL EXISTING CONDITIONS AND REPORT ANY DEFICIENCIES TO THE OWNER.

B. ALL PLANTING AREAS SHALL BE CONDITIONED AS FOLLOWS:

1. PREPARE NEW PLANTING BEDS BY SCRAPING AWAY EXISTING GRASS AND WEEDS AS NECESSARY. TILL EXISTING SOIL TO A DEPTH OF SIX (6") INCHES PRIOR TO PLACING COMPOST AND FERTILIZER. APPLY FERTILIZER AS PER MANUFACTURER'S RECOMMENDATIONS. ADD SIX (6") INCHES OF COMPOST AND TILL INTO A DEPTH OF SIX (6") INCHES OF THE TOPSOIL. APPLY ORGANIC FERTILIZER SUCH AS SUSTANE OR GREEN SENSE AT THE RATE OF TWENTY (20) POUNDS PER ONE THOUSAND (1,000) SQUARE FEET.

2. ALL PLANTING AREAS SHALL RECEIVE A TWO (2") INCH LAYER OF SPECIFIED MULCH.

3. BACKFILL FOR TREE PITS SHALL BE AS FOLLOWS: USE EXISTING TOP SOIL ON SITE (USE IMPORTED TOPSOIL AS NEEDED) FREE FROM LARGE CLUMPS, ROCKS, DEBRIS, CALICHE, SUBSOILS, ETC., PLACED IN NINE (9") INCH LAYERS AND WATERED IN THOROUGHLY.

C. GRASS AREAS:

1. AREAS TO BE SOLID SOD BERMUDAGRASS: BLOCKS OF SOD SHOULD BE LAID JOINT TO JOINT (STAGGERED JOINTS) AFTER FERTILIZING THE GROUND FIRST. ROLL GRASS AREAS TO ACHIEVE A SMOOTH, EVEN SURFACE. THE JOINTS BETWEEN THE BLOCKS OF SOD SHOULD BE FILLED WITH TOPSOIL WHERE THEY ARE EVIDENTLY GAPED OPEN, THEN WATERED THOROUGHLY.

2. AREAS TO BE HYDROMULCH COMMON BERMUDAGRASS: HYDROMULCH WITH BERMUDAGRASS SEED AT A RATE OF TWO (2) POUNDS PER ONE THOUSAND (1,000) SQUARE FEET. USE A 4' X 8' BATTER BOARD AGAINST THE BED AREAS.

3.2 INSTALLATION

A. MAINTENANCE OF PLANT MATERIALS SHALL BEGIN IMMEDIATELY AFTER EACH PLANT IS DELIVERED TO THE SITE AND SHALL CONTINUE UNTIL ALL CONSTRUCTION HAS BEEN SATISFACTORILY ACCOMPLISHED.

B. PLANT MATERIALS SHALL BE DELIVERED TO THE SITE ONLY AFTER THE BEDS ARE PREPARED AND AREAS ARE READY FOR PLANTING. ALL SHIPMENTS OF NURSERY MATERIALS SHALL BE THOROUGHLY PROTECTED FROM THE DRYING WINDS DURING TRANSIT. ALL PLANTS WHICH CANNOT BE PLANTED AT ONCE, AFTER DELIVERY TO THE SITE, SHALL BE WELL PROTECTED AGAINST THE POSSIBILITY OF DRYING BY WIND AND SUN. BALLS OF EARTH OF B & B PLANTS SHALL BE KEPT COVERED WITH SOIL OR OTHER ACCEPTABLE MATERIAL. ALL PLANTS REMAIN THE PROPERTY OF THE CONTRACTOR UNTIL FINAL ACCEPTANCE.

C. POSITION THE TREES AND SHRUBS IN THEIR INTENDED LOCATION AS PER PLAN.

D. NOTIFY THE LANDSCAPE ARCHITECT FOR INSPECTION AND APPROVAL OF ALL POSITIONING OF PLANT MATERIALS.

E. EXCAVATE PITS WITH VERTICAL SIDES AND HORIZONTAL BOTTOM. TREE PITS SHALL BE LARGE ENOUGH TO PERMIT HANDLING AND PLANTING WITHOUT INJURY TO BALLS OF EARTH OR ROOTS AND SHALL BE OF SUCH DEPTH THAT,WHEN PLANTED AND SETTLED, THE CROWN OF THE PLANT SHALL BEAR THE SAME RELATIONSHIP TO THE FINISH GRADE AS IT DID TO SOIL SURFACE IN ORIGINAL PLACE OF GROWTH.

F. SHRUB AND TREE PITS SHALL BE NO LESS THAN TWENTY-FOUR (24") INCHES WIDER THAN THE LATERAL DIMENSION OF THE EARTH BALL AND SIX (6") INCHES DEEPER THAN IT'S VERTICAL DIMENSION. REMOVE AND HAUL FROM SITE ALL ROCKS AND STONES OVER THREE-QUARTER (3/4") INCH IN DIAMETER. PLANTS SHOULD BE THOROUGHLY MOIST BEFORE REMOVING CONTAINERS.

G. DIG A WIDE, ROUGH SIDED HOLE EXACTLY THE SAME DEPTH AS THE HEIGHT OF THE BALL, ESPECIALLY AT THE SURFACE OF THE GROUND. THE SIDES OF THE HOLE SHOULD BE ROUGH AND JAGGED, NEVER SLICK OR GLAZED.

H. PERCOLATION TEST: FILL THE HOLE WITH WATER. IF THE WATER LEVEL DOES NOT PERCOLATE WITHIN 24 HOURS, THE TREE NEEDS TO MOVE TO ANOTHER LOCATION OR HAVE DRAINAGE ADDED. INSTALL A PVC STAND PIPE PER TREE PLANTING DETAIL AS APPROVED BY THE LANDSCAPE ARCHITECT IF THE PERCOLATION TEST FAILS.

I. BACKFILL ONLY WITH 5 PARTS EXISTING SOIL OR SANDY LOAM AND 1 PART BED PREPARATION. WHEN THE HOLE IS DUG IN SOLID ROCK, TOPSOIL FROM THE SAME AREA SHOULD NOT BE USED. CAREFULLY SETTLE BY WATERING TO PREVENT AIR POCKETS. REMOVE THE BURLAP FROM THE TOP 1/3 OF THE BALL, AS WELL AS ALL NYLON, PLASTIC STRING AND WIRE MESH. CONTAINER TREES WILL USUALLY BE ROOT BOUND, IF SO FOLLOW STANDARD NURSERY PRACTICE OF 'ROOT SCORING'.

J. DO NOT WRAP TREES.

K. DO NOT OVER PRUNE.

L. MULCH THE TOP OF THE BALL. DO NOT PLANT GRASS ALL THE WAY TO THE TRUNK OF THE TREE. LEAVE THE AREA ABOVE THE TOP OF THE BALL AND MULCH WITH AT LEAST TWO (2") INCHES OF SPECIFIED MULCH.

M. ALL PLANT BEDS AND TREES TO BE MULCHED WITH A MINIMUM SETTLED THICKNESS OF TWO (2") INCHES OVER THE ENTIRE BED OR PIT.

N. OBSTRUCTION BELOW GROUND: IN THE EVENT THAT ROCK, OR UNDERGROUND CONSTRUCTION WORK OR OBSTRUCTIONS ARE ENCOUNTERED IN ANY PLANT PIT EXCAVATION WORK TO BE DONE UNDER THIS SECTION, ALTERNATE LOCATIONS MAY BE SELECTED BY THE OWNER. WHERE LOCATIONS CANNOT BE CHANGED, THE OBSTRUCTIONS SHALL BE REMOVED TO A DEPTH OF NOT LESS THAN THREE (3') FEET BELOW GRADE AND NO LESS THAN SIX (6") INCHES BELOW THE BOTTOM OF BALL WHEN PLANT IS PROPERLY SET AT THE REQUIRED GRADE. THE WORK OF THIS SECTION SHALL INCLUDE THE REMOVAL FROM THE SITE OF SUCH ROCK OR UNDERGROUND OBSTRUCTIONS ENCOUNTERED AT THE COST OF THE LANDSCAPE CONTRACTOR.

O. TREES AND LARGE SHRUBS SHALL BE STAKED AS SITE CONDITIONS REQUIRE. POSITION STAKES TO SECURE TREES AGAINST SEASONAL PREVAILING WINDS.

P. PRUNING AND MULCHING: PRUNING SHALL BE DIRECTED BY THE LANDSCAPE ARCHITECT AND SHALL BE PRUNED IN ACCORDANCE WITH STANDARD HORTICULTURAL PRACTICE FOLLOWING FINE PRUNING, CLASS 1 PRUNING STANDARDS PROVIDED BY THE NATIONAL ARBORIST ASSOCIATION.

1. DEAD WOOD, SUCKERS, BROKEN AND BADLY BRUISED BRANCHES SHALL BE REMOVED. GENERAL TIPPING OF THE BRANCHES IS NOT PERMITTED. DO NOT CUT TERMINAL BRANCHES.

2. PRUNING SHALL BE DONE WITH CLEAN, SHARP TOOLS.

3. IMMEDIATELY AFTER PLANTING OPERATIONS ARE COMPLETED, ALL TREE PITS SHALL BE COVERED WITH A LAYER OF ORGANIC MATERIAL TWO (2") INCHES IN DEPTH. THIS LIMIT OF THE ORGANIC MATERIAL FOR TREES SHALL BE THE DIAMETER OF THE PLANT PIT.

Q. STEEL CURBING INSTALLATION:

1. CURBING SHALL BE ALIGNED AS INDICATED ON PLANS. STAKE OUT LIMITS OF STEEL CURBING AND OBTAIN OWNERS APPROVAL PRIOR TO INSTALLATION

2. ALL STEEL CURBING SHALL BE FREE OF KINKS AND ABRUPT BENDS.

3. TOP OF CURBING SHALL BE 1/2" MAXIMUM HEIGHT ABOVE FINAL FINISHED GRADE.

4. STAKES ARE TO BE INSTALLED ON THE PLANTING BED SIDE OF THE CURBING, AS OPPOSED TO THE GRASS SIDE.

5. DO NOT INSTALL STEEL EDGING ALONG SIDEWALKS OR CURBS.

6. CUT STEEL EDGING AT 45 DEGREE ANGLE WHERE EDGING MEETS SIDEWALKS OR CURBS.

3.3 CLEANUP AND ACCEPTANCE

CLEANUP: DURING THE WORK, THE PREMISES SHALL BE KEPT NEAT AND ORDERLY AT ALL TIMES. STORAGE AREAS FOR ALL MATERIALS SHALL BE SO ORGANIZED SO THAT THEY, TOO, ARE NEAT AND ORDERLY. ALL TRASH AND DEBRIS SHALL BE REMOVED FROM THE SITE AS WORK PROGRESSES. KEEP PAVED AREAS CLEAN BY SWEEPING OR HOSING THEM AT END OF EACH WORKDAY.

END OF SECTION

GENERAL LAWN NOTES

1. CONTRACTOR SHALL COORDINATE OPERATIONS AND AVAILABILITY OF EXISTING TOPSOIL WITH ON-SITE CONSTRUCTION MANAGER.
2. CONTRACTOR SHALL LEAVE LAWN AREAS 1" BELOW FINAL FINISHED GRADE PRIOR TO TOPSOIL INSTALLATION.
3. CONTRACTOR SHALL FINE GRADE AREAS TO ACHIEVE FINAL CONTOURS AS INDICATED ON CIVIL PLANS. ADJUST CONTOURS TO ACHIEVE POSITIVE DRAINAGE AWAY FROM BUILDINGS. PROVIDE UNIFORM ROUNDING AT TOP AND BOTTOM OF SLOPES AND OTHER BREAKS IN GRADE. CORRECT IRREGULARITIES AND AREAS WHERE WATER MAY STAND.
4. ALL LAWN AREAS SHALL BE FINE GRADED, IRRIGATION TRENCHES COMPLETELY SETTLED AND FINISH GRADE APPROVED BY THE OWNER'S CONSTRUCTION MANAGER OR LANDSCAPE ARCHITECT PRIOR TO LAWN INSTALLATION.
5. CONTRACTOR SHALL REMOVE ALL ROCKS 3/4" DIAMETER AND LARGER, DIRT CLODS, STICKS, CONCRETE SPOILS, ETC. PRIOR TO PLACING TOPSOIL AND LAWN INSTALLATION.
6. CONTRACTOR SHALL PROVIDE AN ADD ALTERNATE PRICE TO INSTALL (2") TWO INCHES OF IMPORTED TOPSOIL ON ALL LAWN AREAS IN LIEU OF USING EXISTING TOPSOIL ON-SITE . IMPORTED TOPSOIL SHALL BE NATURAL, FRIABLE SOIL FROM THE REGION, KNOWN AS BOTTOM LAND SOIL, FREE FROM LUMPS, CLAY, TOXIC SUBSTANCES, ROOTS, DEBRIS, VEGETATION, STONES, CONTAINING NO SALT AND BLACK TO BROWN IN COLOR.
7. CONTRACTOR SHALL MAINTAIN ALL LAWN AREAS UNTIL FINAL ACCEPTANCE. THIS SHALL INCLUDE, BUT NOT LIMITED TO: MOWING, WATERING, WEEDING, CULTIVATING, CLEANING AND REPLACING DEAD OR BARE AREAS TO KEEP PLANTS IN A VIGOROUS, HEALTHY CONDITION.
8. CONTRACTOR SHALL GUARANTEE ESTABLISHMENT OF ACCEPTABLE TURF AREA AND SHALL PROVIDE REPLACEMENT FROM LOCAL SUPPLY IF NECESSARY.

LANDSCAPE NOTES

1. CONTRACTOR SHALL VERIFY ALL EXISTING AND PROPOSED SITE ELEMENTS AND NOTIFY LANDSCAPE ARCHITECT OF ANY DISCREPANCIES. SURVEY DATA OF EXISTING CONDITIONS WAS SUPPLIED BY OTHERS.
2. CONTRACTOR SHALL LOCATE ALL EXISTING UNDERGROUND UTILITIES AND NOTIFY LANDSCAPE ARCHITECT OF ANY CONFLICTS. CONTRACTOR SHALL EXERCISE CAUTION WHEN WORKING IN THE VICINITY OF UNDERGROUND UTILITIES.
3. CONTRACTOR SHALL PROVIDE A MINIMUM 2% SLOPE AWAY FROM ALL STRUCTURES.
4. CONTRACTOR SHALL FINE GRADE AREAS TO ACHIEVE FINAL CONTOURS AS INDICATED. LEAVE AREAS TO RECEIVE TOPSOIL 3" BELOW FINAL FINISHED GRADE IN PLANTING AREAS AND 1" BELOW FINAL FINISHED GRADE IN LAWN AREAS.
5. ALL PLANTING BEDS AND LAWN AREAS TO BE SEPARATED BY STEEL EDGING. NO STEEL EDGING SHALL BE INSTALLED ADJACENT TO SIDEWALKS OR CURBS. CUT STEEL EDGING AT 45 DEGREE ANGLE WHERE IT INTERSECTS SIDEWALKS AND CURBS.
6. ALL LAWN AREAS TO BE **SOD OF SAME TYPE AS EXISTING SOD,** UNLESS OTHERWISE NOTED ON THE DRAWINGS.
7. ALL LANDSCAPE AREAS TO BE 100% IRRIGATED WITH AN UNDERGROUND AUTOMATIC IRRIGATION SYSTEM AND SHALL INCLUDE RAIN AND FREEZE SENSORS.
8. CONTRACTOR SHALL PROVIDE BID PROPOSAL LISTING UNIT PRICES FOR ALL MATERIAL PROVIDED.
9. CONTRACTOR SHALL BE RESPONSIBLE FOR OBTAINING ALL REQUIRED LANDSCAPE AND IRRIGATION PERMITS.

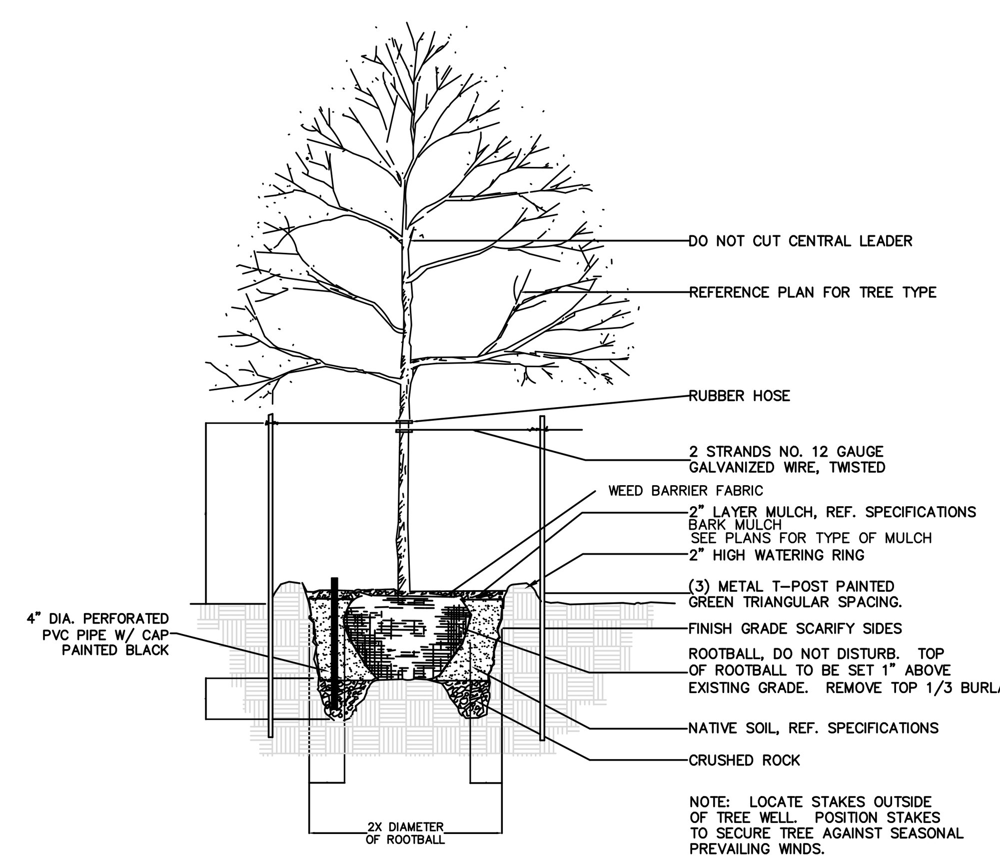

TREE PLANTING DETAIL 3 / L103

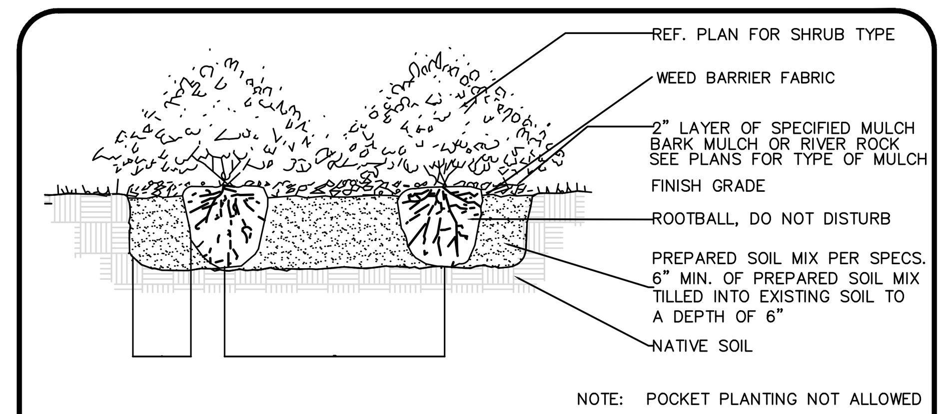

SHRUB PLANTING DETAIL 1 / L103

NOT TO SCALE

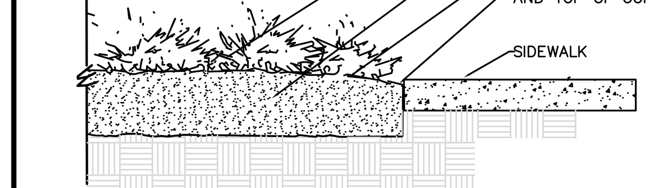

MULCHING DETAIL @ SIDEWALKS 2 / L103

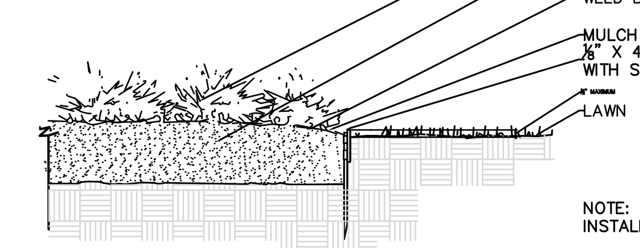

STEEL EDGING DETAIL 4 / L103

NOT TO SCALE

LANDSCAPE DETAILS

REVISIONS	BY

FREELAND and KAUFFMAN, INC.
Engineers * Landscape Architects
209 West Stone Avenue
Greenville, South Carolina 29609
864-233-5497
fax 864-233-8915

TODD BURNETT
STATE OF UTAH
09/12/2024

CHILI'S GRILL & BAR
951 N MAIN STREET
TOOELE, UT 84074

BRINKER INTERNATIONAL
3000 OLYMPUS BLVD
DALLAS, TX 75019

DRAWN	JMD
CHECKED	TMB
DATE	09/12/2024
SCALE	AS SHOWN
DRAWING	L102

ISSUED FOR BID SEPTEMBER 12, 2024

PROPERTY ACREAGE SUMMARY (IN ACRES)	
TOTAL PARCEL(S) AREA	1.27
ON-SITE DISTURBED AREA	0.27
OFF-SITE DISTURBED AREA	0.00
TOTAL DISTURBED AREA ONLY'S DEVELOPMENT ONLY	0.27
PERVIOUS AREA (POST-CONSTRUCTION) ON SITE ONLY	0.07
IMPERVIOUS AREA (POST-CONSTRUCTION) ON SITE ONLY	1.20

THE CONTRACTOR SHALL DESIGN A COMPLETE DRIP IRRIGATION SYSTEM TO PROVIDE IRRIGATION WATER TO ALL NON-PAVED AREAS. THE SYSTEM SHALL BE DIVIDED INTO ZONES SUCH THAT LINE VELOCITY DOES NOT EXCEED 5 fps. ZONES SHALL BE CONTROLLED SO THAT THE IRRIGATION DEMAND DOES NOT EXCEED 85% OF THE WATER METER CAPACITY. THE CONTRACTOR SHALL USE HYDRAULIC PRINCIPLES TO DESIGN ALL COMPONENTS TO ENSURE ADEQUATE FLOW AND PRESSURE TO PROPERLY OPERATE THE SYSTEM. PIPE FRICTION SHALL BE BASED ON A FRICTION FACTOR (C=150) SUITABLE FOR PVC PIPE.

- TURF AREAS SHALL BE IRRIGATED SEPARATELY FROM SHRUB/PLANT BEDS VIA AERIAL IRRIGATION
- SHRUB/PLANT BEDS SHALL BE IRRIGATED SEPARATELY FROM TURF AREAS VIA DRIP IRRIGATION.

THE CONTRACTOR SHALL PREPARE A COMPLETE IRRIGATION PLAN SHOWING PERTINENT SITE FEATURES, VALVES, PIPING, ETC. THE PLAN SHALL BECOME THE PROPERTY OF BRINKER INTERNATIONAL AT THE COMPLETION OF THE PROJECT.

THE IRRIGATION SYSTEM SHALL BE DESIGNED IN ACCORDANCE WITH THE PROCEDURES OUTLINED BY NETAFIM USA.

ALL EQUIPMENT SHALL BE INSTALLED PER MANUFACTURES SPECIFICATIONS. MINIMUM FILTRATION IS 120 MESH. THE FILTER AND REGULATOR SIZE SHALL BE DETERMINED BY THE FLOW RATE IF EACH ZONE.

DRIP IRRIGATION SYSTEM SHALL BE INSTALLED PER MANUFACTURES SPECIFICATION. NETAFIM TECHLINE #TLDL6-1210 LATERAL SPACING SHALL BE IN ACCORDANCE WITH NETAFIM SELECTION GUIDELINE CHARTS BASED ON SOIL TYPE.

THE IRRIGATION CONTROL SYSTEM SHALL INCLUDE RAIN SENSORS TO MONITOR RAINFALL LEVELS AND PREVENT UNNECESSARY IRRIGATION.

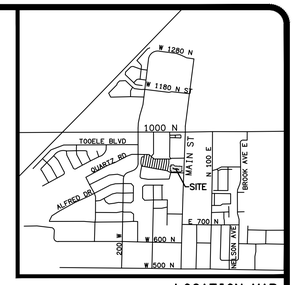

LOCATION MAP
N. T. S.

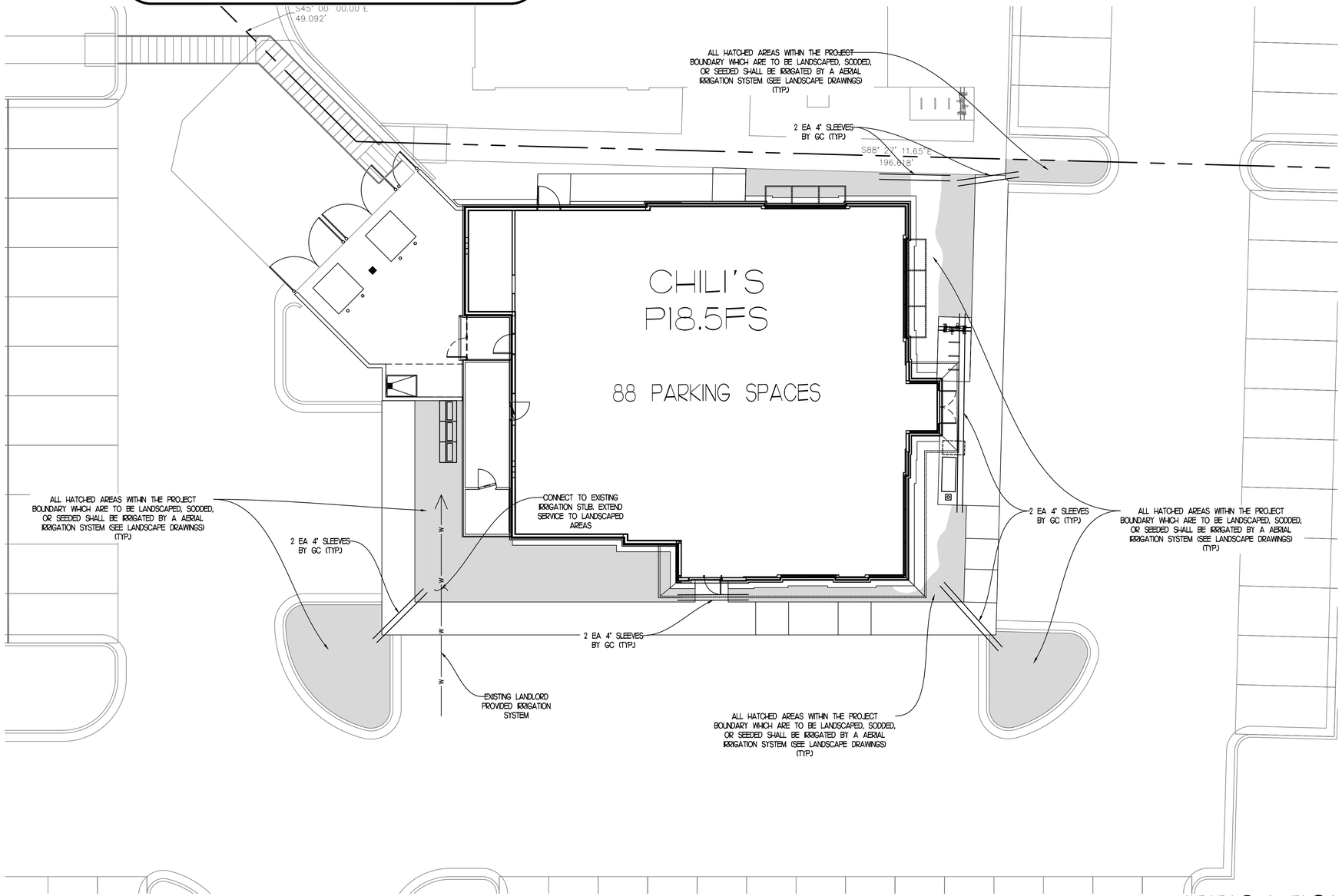

IRRIGATION PLAN

SCALE 1" = 10'

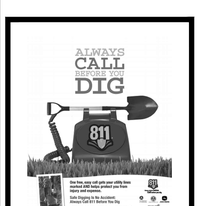

EVERY DIGGING JOB REQUIRES A CALL – EVEN SMALL PROJECTS LIKE PLANTING TREES OR SHRUBS. IF YOU HIT AN UNDERGROUND UTILITY LINE WHILE DIGGING, YOU CAN HARM YOURSELF OR THOSE AROUND YOU, DISRUPT SERVICE TO AN ENTIRE NEIGHBORHOOD AND POTENTIALLY BE RESPONSIBLE FOR FINES AND REPAIR COSTS.

SMART DIGGING MEANS CALLING 811 BEFORE EACH JOB. WHETHER YOU ARE A HOMEOWNER OR A PROFESSIONAL EXCAVATOR, ONE CALL TO 811 GETS YOUR UNDERGROUND UTILITY LINES MARKED FOR FREE.

REVISIONS	BY

FREELAND and KAUFFMAN, INC.
Engineers * Landscape Architects
209 West Stone Avenue
Greenville, South Carolina 29609
864-233-5497
fax 864-233-8915

PROFESSIONAL ENGINEER No.13889119-2202 TODD BURNETT STATE OF UTAH
09/12/2024

CHILI'S GRILL & BAR
951 N MAIN STREET
TOOELE, UT 84074

BRINKER INTERNATIONAL
3000 OLYMPUS BLVD
DALLAS, TX 75019

DRAWN	JMD
CHECKED	TMB
DATE	09/12/2024
SCALE	AS SHOWN
DRAWING	L201

ISSUED FOR BID SEPTEMBER 12, 2024

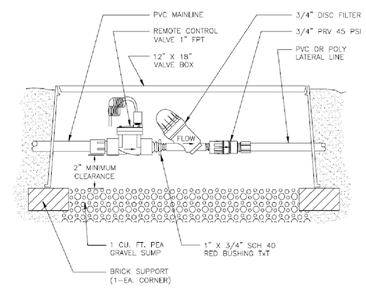

00 LOW-VOLUME CONTROL SYSTEM:
P/N LVCZS80-10075-LF - 4.4 GPM NOT TO SCALE DETAIL – L201LF

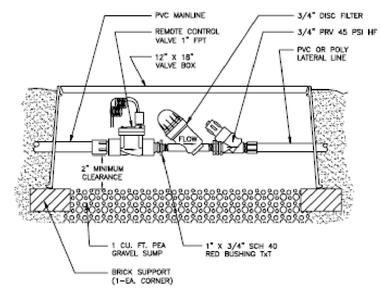

00 LOW-VOLUME CONTROL ZONE ASSEMBLY;
P/N LVCZS80-10075-HF 4.5 - 17.6 GPM NOT TO SCALE DETAIL – L211HF

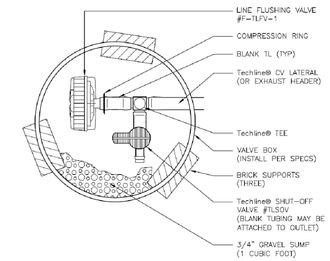

00 Techline® LINE FLUSHING VALVE WITH SHUT-OFF VALVE
NOT TO SCALE DETAIL – D121

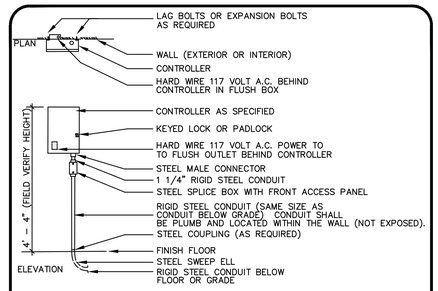

WALL MOUNTED CONTROLLER

IRRIGATION DETAILS

REVISIONS	BY

FREELAND and KAUFFMAN, INC.
Engineers * Landscape Architects
209 West Stone Avenue
Greenville, South Carolina 29609
864-233-5497
fax 864-233-8915

PROFESSIONAL ENGINEER No.13889119-2202 TODD BURNETT STATE OF UTAH
09/12/2024

CHILI'S GRILL & BAR
951 N MAIN STREET
TOOELE, UT 84074
BRINKER INTERNATIONAL
3000 OLYMPUS BLVD
DALLAS, TX 75019

DRAWN	JMD
CHECKED	TMB
DATE	09/12/2024
SCALE	AS SHOWN
DRAWING	L202

ISSUED FOR BID SEPTEMBER 12, 2024

GENERAL NOTES

A. BUILDING AND DESIGN CODES:

1. 2021 INTERNATIONAL BUILDING CODE (2021 IBC) WITH COUNTY OF TOOELE AND STATE OF UTAH AMENDMENTS
2. ASCE 7-16 MINIMUM DESIGN LOADS BUILDING AND OTHER STRUCTURES.
3. AISC MANUAL OF STEEL CONSTRUCTION, 13TH EDITION.
4. ACI 318 BUILDING CODE REQUIREMENTS FOR STRUCTURAL CONCRETE, THE LATEST EDITION.
5. ACI 530 BUILDING CODE REQUIREMENTS FOR MASONRY STRUCTURES, THE LATEST EDITION.

B. DESIGN LOADS:

1. LIVE LOADS:	UNIFORM LOAD
a. ROOF	20 PSF

LOADING FOR ROOFTOP MECHANICAL EQUIPMENT IS BASED ON THE WEIGHTS INDICATED ON THE ROOF FRAMING PLAN. ANY CHANGES IN TYPE, SIZE, LOCATION, OR NUMBER OF PIECES OF EQUIPMENT SHOULD BE REPORTED TO THE ENGINEER FOR VERIFICATION OF THE ADEQUACY OF SUPPORTING MEMBERS PRIOR TO PLACEMENT OF EQUIPMENT.

2. DEAD LOADS:	UNIFORM LOAD
a. FLAT ROOF	20 PSF

3. WIND LOADS:
   A. BASIC WIND SPEED – V = 115 MPH (ULT)
   B. RISK CATEGORY – II
   C. EXPOSURE – C
   D. INTERNAL PRESSURE COEFFICIENT – +/- 0.18
   E. ASD WALL COMPONENT AND CLADDING DESIGN PRESSURE (TRIB AREA = 10 SF.) – ±21.1 PSF
   F. ROOF ASD COMPONENT AND CLADDING DESIGN UPLIFT PRESSURE (TRIB AREA = 10 SF.) – 36.4PSF (GROSS)

1 4. SEISMIC LOADS
   A. RISK CATEGORY – II
   B. SPECTRAL RESPONSE COEFF. – SDS = 0.588 SD1 = 0.361
   C. SITE CLASS – D
   D. DESIGN CATEGORY – D
   E. BASIC FORCE RESISTING SYSTEM – BEARING WALL SYSTEM, LIGHT FRAMED WALLS WITH WOOD SHEAR PANELS
   F. RESPONSE MODIFICATION FACTOR – R = 6.5
   G. DESIGN BASE SHEAR – V = 0.090W (LRFD)
   H. ANALYSIS PROCEDURE – EQUIVALENT LATERAL FORCE, PROCEDURE
   I. IMPORTANCE Ie – 1.00
   J. MAPPED SPECTRAL RESPONSE ACCEL. – SS = .720 S1 = 0.260
   K. SEISMIC RESPONSE COEFF. – CS = 0.090

5. SNOW LOADS:
   A. GROUND SNOW LOAD – PG = 35 PSF
   B. IMPORTANCE I – 1.00
   C. THERMAL FACTOR CT – 1.0
   D. EXPOSURE CE – 1.0
   E. FLAT ROOF SNOW LOAD – PF = 30 PSF

C. GENERAL REQUIREMENTS:

1. SPECIFICATIONS ARE PART OF THE CONSTRUCTION DOCUMENTS AND MUST BE USED IN CONJUNCTION WITH THE DRAWINGS.
2. VERIFY EXISTING CONDITIONS AND DIMENSIONS PRIOR TO BEGINNING SHOP DRAWINGS OR FABRICATING MATERIALS. NOTIFY BRINKER CONSTRUCTION MANAGER OF DISCREPANCIES BEFORE PROCEEDING WITH ANY PHASE WORK. SUBMIT THE APPROPRIATE PLANS AND DETAILS REFLECTING THE FIELD VERIFIED EXISTING CONDITIONS FOR THE BRINKER CONSTRUCTION MANAGER'S USE.
3. VERIFY THE LOCATION OF CHASES, INSERTS, OPENINGS, SLEEVES, FINISHES, DEPRESSIONS, PADS, AND WALL OPENINGS.
4. DO NOT SCALE DRAWINGS FOR THE PURPOSE OF ESTABLISHING DIMENSIONS.
5. DETAILS LABELED "TYPICAL DETAILS" ON DRAWINGS APPLY TO SITUATIONS OCCURRING ON THE PROJECT THAT ARE THE SAME OR SIMILAR TO THOSE SPECIFICALLY DETAILED. SUCH DETAILS APPLY WHETHER OR NOT DETAILS ARE REFERENCED AT EACH LOCATION. NOTIFY ENGINEER OF CONFLICTS REGARDING APPLICABILITY OF "TYPICAL DETAILS".
6. DO NOT LOAD THE SLAB ON GRADE OR SUPPORTED SLAB WITH ERECTION CRANES OR ERECTION EQUIPMENT. THE SLABS HAVE NOT BEEN DESIGNED FOR CRANE LOADS AND WILL REQUIRE AN INCREASE IN THICKNESS AND/OR REINFORCEMENT. OBTAIN BRINKER CONSTRUCTION MANAGER APPROVAL ON PROPOSED CRANE SUPPORT PLAN FOR SLABS PRIOR TO COMMENCING WORK.
7. DO NOT STORE OR STACK CONSTRUCTION MATERIALS ON POURED OR ERECTED FLOORS/ROOFS IN EXCESS OF 80 PERCENT OF LIVE LOAD. GENERAL CONTRACTOR WILL ENSURE THAT ALL SUB-CONTRACTORS ARE INFORMED OF LOADING RESTRICTIONS. AVOID IMPACT WHEN PLACING MATERIALS ON POURED OR ERECTED FLOORS OR ROOF.
8. THE CONTRACT STRUCTURAL DOCUMENTS REPRESENT THE FINISHED STRUCTURE. THE CONTRACTOR IS RESPONSIBLE FOR THE MEANS AND METHODS OF CONSTRUCTION. PROVIDE ALL MEASURES REQUIRED TO PROTECT THE STRUCTURE, WORKMEN, AND OTHER PERSONS DURING CONSTRUCTION; INCLUDING BRACING, SHORING FOR CONSTRUCTION EQUIPMENT, SHORING FOR THE BUILDING, FORMS AND SCAFFOLDING, SHORING OF RETAINING WALLS AND OTHER TEMPORARY SUPPORTS AS REQUIRED.
9. PRINCIPAL OPENINGS THROUGH THE FRAMING ARE SHOWN ON DRAWINGS. EXAMINE THE ARCHITECTURAL AND MECHANICAL DRAWINGS FOR THE REQUIRED OPENINGS AND PROVIDE FOR REQUIRED OPENINGS WHETHER SHOWN ON THE STRUCTURAL DRAWINGS OR NOT, VERIFY SIZE AND LOCATION OF OPENINGS WITH THE MECHANICAL CONTRACTOR. DEVIATIONS FROM THE OPENINGS SHOWN ON THE STRUCTURAL DRAWINGS MUST BE APPROVED PRIOR TO IMPLEMENTING THE CHANGES.
10. THE STRUCTURAL ENGINEER'S REVIEW OF THE SHOP DRAWINGS SHALL NOT RELIEVE THE CONTRACTOR FROM RESPONSIBILITY FOR DEVIATIONS FROM THE CONTRACT DOCUMENTS, NOR FROM ANY ERRORS IN THE SHOP DRAWINGS.

1

REQUIRED SPECIAL INSPECTIONS (REFERENCE SHEET S002 FOR SPECIAL INSPECTION SCHEDULE)

SPECIAL INSPECTIONS AS REQUIRED BY THE 2021 IBC:

A. STEEL

B. CONCRETE

C. MASONRY

D. WOOD

E. POST-INSTALLED ANCHORS – REFER TO MANUFACTURER AND APPLICABLE ESR REPORT.

F. INSPECTION OF SITE SOILS, FILL PLACEMENT, AND BEARING CAPACITIES BY A LICENSED GEOTECHNICAL ENGINEER AS FOLLOWS:
   1. OBSERVATION OF PROOF ROLLING FOR THE SITE PRIOR TO FILL PLACEMENT.
   2. COMPACTION TESTING OF STRUCTURAL FILL PLACEMENT.
   3. PROVIDE BEARING TESTS AT EACH FOOTING LOCATION TO CONFIRM BEARING CAPACITY.

FOUNDATION NOTES

A. REFER TO THE GEOTECHNICAL REPORT AND SPECIFICATIONS FOR GENERAL REQUIREMENTS OF EARTHWORK, OVEREXCAVATION, SUBGRADE PREPARATION, FILL AND COMPACTION, WATERPROOFING AND OTHER PERTINENT REQUIREMENTS AND INFORMATION.

B. FOUNDATION DESIGN IS BASED UPON SOILS EXPLORATION AND REPORT BY AGEC, PROJECT NO. 1180597, DATED 03/04/2019.

C. FOUNDATIONS ARE DESIGNED FOR AN ALLOWABLE NET BEARING PRESSURE OF 1,500 PSF, FOUNDED AT A MINIMUM OF 30" INCHES BELOW FINAL GRADE AND BEARING ON APPROVED UNDISTURBED NATIVE SOIL OR COMPACTED STRUCTURAL FILL.

D. PROTECT PIPES AND CONDUITS RUNNING THROUGH WALLS AND SLABS WITH 1/2 INCH EXPANSION MATERIAL. LOWER CONTINUOUS FOOTINGS AND GRADE BEAMS PERPENDICULAR TO PIPE RUNS TO ALLOW PIPES TO PASS ABOVE THE FOOTINGS OR THROUGH THE GRADE BEAMS. ALTERNATIVELY, PROVIDE A CONCRETE JACKET IF PIPES ARE LOW ENOUGH TO BE PLACED BELOW THE FOOTINGS AND GRADE BEAMS. LOWER FOOTINGS AND GRADE BEAMS PARALLEL TO PIPE RUNS TO AVOID SURCHARGE ONTO ADJACENT TRENCH EXCAVATIONS.

E. CONSTRUCTION MONITORING AND TESTING OF SUBGRADES FOR FILL, FOUNDATION, FLOOR SLAB AND PAVEMENT, FILL SELECTION, PLACEMENT AND COMPACTION SHALL BE PERFORMED BY AN EXPERIENCED SOILS ENGINEER AND/OR HIS REPRESENTATIVES.

F. ALL COMPACTION FILL, SUBGRADES, AND GRADES SHALL BE (A) UNDERLAIN BY SUITABLE BEARING MATERIAL, (B) FREE OF ALL ORGANIC, FROZEN, OR OTHER DELETERIOUS MATERIAL, AND (C) OBSERVED, TESTED AND APPROVED BY QUALIFIED ENGINEERING PERSONNEL REPRESENTING AN EXPERIENCED SOILS ENGINEER. PREPARATION OF SUBGRADES AFTER STRIPPING VEGETATION, ORGANIC, OR OTHER UNSUITABLE EXISTING FILL MATERIALS SHALL CONSIST OF (A) PROOFROLLING TO DETECT SOIL, WET, YIELDING SOILS OR OTHER UNSTABLE MATERIALS THAT MUST BE UNDERCUT, (B) PLACEMENT OF COMPACTED FILL, (C) MOISTURE CONDITIONING THE FILL AS REQUIRED, AND (D) RECOMPACTION TO SAME MINIMUM IN-SITU DENSITY REQUIRED FOR SIMILAR MATERIALS INDICATED UNDER ITEM H.

G. IN OVEREXCAVATION AND FILL AREAS, THE COMPACTED FILL MUST EXTEND (A) A MINIMUM OF FIVE FEET LATERAL DISTANCE BEYOND THE EXTERIOR EDGE OF THE FOUNDATION AT BEARING GRADE OR PAVEMENT AT SUBGRADE AND DOWN TO COMPACTED FILL SUBGRADE ON A MAXIMUM 0.5 (H): 1 (V) SLOPE, (B) ONE FOOT ABOVE GRADE BEAM OUTSIDE THE BUILDING, AND (C) TO FLOOR SUBGRADE INSIDE THE BUILDING. FILL SHALL BE PLACED AND COMPACTED ON A 3 (H):1 (V) SLOPE OR MUST BE STEPPED OR BENCHED AS REQUIRED TO FLATTEN IF NOT SPECIFICALLY APPROVED BY QUALIFIED PERSONNEL UNDER THE DIRECTION OF AN EXPERIENCED SOIL ENGINEER.

H. THE COMPACTED FILL MATERIALS SHALL BE FREE OF DELETERIOUS, ORGANIC, OR FROZEN MATTER, SHALL CONTAIN NO CHEMICALS THAT MAY RESULT IN THE MATERIAL BEING CLASSIFIED AS 'CONTAMINATED', AND SHALL BE LOW-EXPANSIVE WITH A MAXIMUM ATTERBURG LIQUID-LIMIT (ASTM D-423) OF 30. THE COMPACTED FILL SHALL HAVE A MAXIMUM TWO-INCH-PARTICLE DIAMETER UNLESS SPECIFICALLY APPROVED UNDER THE DIRECTION OF AN EXPERIENCED SOILS ENGINEER PRIOR TO PLACEMENT.

I. THE DENSITY OF THE STRUCTURAL COMPACTED FILL AND SUBGRADE AND GRADES SHALL NOT BE LESS THAN 95 PERCENT OF THE MAXIMUM DRY DENSITY AS DETERMINED BY ASTM D1557. THE MOISTURE CONTENT OF COHESIVE SOIL SHALL NOT VARY BY MORE THAN -2 TO +2 PERCENT OF THE OPTIMUM WHEN PLACED AND COMPACTED OR RECOMPACTED, UNLESS SPECIFICALLY RECOMMENDED/APPROVED BY THE SOILS ENGINEER MONITORING THE PLACEMENT AND COMPACTION. THE FILL SHALL BE PLACED IN LAYERS WITH A MAXIMUM LOOSE THICKNESS OF EIGHT INCHES. THE COMPACTION EQUIPMENT SHOULD CONSIST OF SUITABLE MECHANICAL EQUIPMENT SPECIFICALLY DESIGNED FOR SOIL COMPACTION. BULLDOZERS OR SIMILAR TRACKED VEHICLES ARE TYPICALLY NOT SUITABLE FOR COMPACTION.

J. EXCAVATION, FILLING, SUBGRADE AND GRADE PREPARATION SHALL BE PERFORMED IN A MANNER AND SEQUENCE THAT WILL PROVIDE DRAINAGE AT ALL TIMES AND PROPER CONTROL OF EROSION. PRECIPITATION, SPRINGS, AND SEEPAGE WATER ENCOUNTERED SHALL BE PUMPED OR DRAINED TO PROVIDE A SUITABLE WORKING PLATFORM. SPRINGS OR WATER SEEPAGE ENCOUNTERED DURING GRADING/FOUNDATION CONSTRUCTION MUST BE CALLED TO THE SOIL ENGINEER'S ATTENTION IMMEDIATELY FOR POSSIBLE CONSTRUCTION PROCEDURE REVISION OR INCLUSION OF AN UNDERDRAIN SYSTEM.

K. WHEREVER, IN THE OPINION OF THE SOILS ENGINEER OR THE OWNER'S REPRESENTATIVES, AN UNSTABLE CONDITION IS BEING CREATED EITHER BY CUTTING OR FILLING, THE WORK SHALL NOT PROCEED INTO THAT AREA UNTIL AN APPROPRIATE GEOTECHNICAL EXPLORATION AND ANALYSIS HAS BEEN PERFORMED AND THE GRADING PLAN REVISED, IF FOUND NECESSARY.

SLAB-ON-GRADE NOTES

A. SLAB ON GRADE SHALL BE FOUR INCHES THICK, REINFORCED WITH #3 REBARS AT 18 INCHES ON CENTER EACH WAY UNLESS OTHERWISE NOTED ON THE DRAWINGS. REBAR SHALL BE PLACED AT MID-HEIGHT IN THE SLAB.

B. THE SLAB SHALL BE UNDERLAIN BY A MINIMUM OF FOUR (4") INCHES OF GRANULAR MATERIAL, OVER APPROVED UNDISTURBED NATIVE SOIL OR COMPACTED STRUCTURAL FILL SUBGRADE. REFERENCE GEOTECH REPORT AND RECOMMENDATIONS. A 15 MIL "STEGO WRAP" (CLASS A) VAPOR BARRIER, MEETING THE REQUIREMENTS OF ASTM E 154 AND E 1745, SHALL BE PLACED BELOW THE FLOOR SLAB TO PROTECT MOISTURE-SENSITIVE FLOOR COVERINGS (I.E. TILE, OR CARPET, ETC.). THE SHEETS OF THE VAPOR RETARDER MATERIAL SHALL BE EVALUATED FOR HOLES AND/OR PUNCTURES PRIOR TO PLACEMENT AND THE EDGES OVERLAPPED AND SEALED WITH "STEGO WRAP" RED POLYETHYLENE TAPE OR "STEGO" MASTIC.

C. PROVIDE CONTROL JOINTS AND OPTIONAL CONSTRUCTION JOINTS ON MAJOR GRID LINES PER DETAIL 1/S102.

REINFORCING STEEL NOTES

A. PROVIDE DETAILING, FABRICATION, AND INSTALLATION OF REINFORCING AND ACCESSORIES IN ACCORDANCE WITH ACI 315 AND ACI 318.

B. PROVIDE NEW BILLET STEEL REINFORCING BARS IN ACCORDANCE WITH ASTM A 615, GRADE 60.

C. PROVIDE ANCHOR BOLTS CONFORMING TO THE STANDARDS OF ASTM F1554 GR 36 UNLESS OTHERWISE NOTED.

D. COORDINATE PLACEMENT OF CAST-IN-PLACE EMBEDMENTS AND ANCHOR BOLTS. SET ANCHOR BOLTS WITH A TEMPLATE. SECURELY ATTACH EMBEDDED ITEMS TO FORMWORK OR REINFORCING.

E. PROVIDE CLASS "B" REINFORCEMENT SPLICES (60 BAR DIAMETERS) FOR CONTINUOUS REINFORCEMENT. PROVIDE STANDARD 90-DEGREE HOOKS IN ACCORDANCE WITH ACI 318, UNLESS OTHERWISE NOTED. STAGGER SPLICES UNLESS SPECIFICALLY NOTED.

F. MAINTAIN THE FOLLOWING CONCRETE COVERAGE FOR REINFORCING STEEL UNLESS OTHERWISE NOTED:

1.	CONCRETE CAST AGAINST EARTH:	3"
2.	CONCRETE EXPOSED TO WEATHER:	
	a. NO. 6 AND LARGER	2"
	b. NO. 5 AND SMALLER	1 1/2"

G. DO NOT WELD OR BEND REINFORCEMENT IN THE FIELD UNLESS SPECIFICALLY SHOWN OR APPROVED BY STRUCTURAL ENGINEER.

H. WHEN SPECIFICALLY APPROVED, PROVIDE WELDED REINFORCEMENT ACCORDANCE WITH ASTM A 706 GRADE 60. USE LOW HYDROGEN ELECTRODES FOR WELDING OF REINFORCEMENT IN CONFORMANCE WITH "RECOMMENDED PRACTICES FOR WELDING REINFORCING STEEL", AMERICAN WELDING SOCIETY, AWS D12.1.

I. WHERE REQUIRED, PROVIDE DOWELS TO MATCH SIZE AND SPACING OF MAIN REINFORCING.

J. PROVIDE CONTINUOUS HORIZONTAL WALL/GRADE BEAM REINFORCEMENT WITH 90-DEGREE BENDS AND EXTENSIONS AT CORNERS AND INTERSECTIONS AS SHOWN ON TYPICAL BAR PLACING DETAILS.

K. PROVIDE BAR SUPPORT ACCESSORIES IN ACCORDANCE WITH THE LATEST ACI MANUAL OF STANDARD PRACTICE FOR DETAILING REINFORCED CONCRETE STRUCTURES. SUPPORT BEAM REINFORCING ON BEAM BOLSTERS SPACED NOT MORE THAN 4 FEET ON CENTER.

L. PROVIDE BAR SUPPORTS WITH PLASTIC COATED LEGS OR HOT DIP GALVANIZING AFTER FABRICATION FOR CONCRETE EXPOSED TO VIEW. PROVIDE STAINLESS STEEL BAR SUPPORTS FOR CONCRETE TO RECEIVE A SANDBLAST FINISH.

CONCRETE NOTES

A. PROVIDE CONCRETE AS SHOWN BELOW. PROVIDE BATCH MIXING, TRANSPORTATION, PLACING AND CURING OF CONCRETE IN ACCORDANCE WITH RECOMMENDATIONS OF ACI 301 AND ACI 318. USE TYPE I PORTLAND CEMENT (ASTM C150) UNLESS OTHERWISE NOTED. PROVIDE ADMIXTURES AND SPECIAL REQUIREMENTS AS SPECIFIED.

   1. NORMAL WEIGHT(150 PCF), F'c = 3,000 PSI CONCRETE AT 28 DAYS.
      a. ALL INTERIOR CONCRETE GRADE SUPPORTED SLABS AND GRADE BEAMS.
      b. FOOTINGS.

   2. NORMAL WEIGHT (150 PCF), F'c = 4500 PSI CONCRETE AT 28 DAYS.
      a. SIDEWALKS, RAMPS AND STAIRS, RETAINING WALLS EXPOSED TO WEATHER.

B. UNLESS SPECIFIED BELOW, CONCRETE MUST REACH THE FOLLOWING PERCENTAGES OF ITS 28 DAY COMPRESSIVE STRENGTH (F'c) BEFORE FORMS MAY BE REMOVED:

   1. WALLS, COLUMNS AND BEAM SIDES. 40 PERCENT

C. PROVIDE CONCRETE MIXES DESIGNED BY A QUALIFIED TESTING LABORATORY FOR REVIEW AND APPROVAL BY THE STRUCTURAL ENGINEER.

D. PROVIDE CONSTRUCTION AND CONTROL JOINTS AS INDICATED ON DRAWINGS. HORIZONTAL CONSTRUCTION JOINTS ARE NOT ALLOWED UNLESS SPECIFICALLY NOTED OR APPROVED BY STRUCTURAL ENGINEER. NOTIFY STRUCTURAL ENGINEER OF PROPOSED CONSTRUCTION JOINT OR CONTROL JOINT LOCATIONS WHICH ARE DIFFERENT OR IN ADDITION TO JOINTS INDICATED ON DRAWINGS. PROVIDE 6,000-SQUARE FOOT MAXIMUM AREA OF CONCRETE PLACEMENT IN THE SLAB BETWEEN CONSTRUCTION JOINTS. PROVIDE 75-FOOT MAXIMUM SPACING OF CONSTRUCTION JOINTS IN GRADE BEAMS. PROVIDE GRADE BEAM CONSTRUCTION JOINTS IN MIDDLE 1/3 OF THE SPAN. WHEN A BEAM INTERSECTS A GIRDER WITHIN THE MIDDLE 1/3 OF THE GIRDERS SPAN, OFFSET THE JOINT IN THE GIRDER A DISTANCE EQUAL TO TWICE THE WIDTH OF THE BEAM.

E. CHAMFER EXPOSED EDGES 3/4 INCH UNLESS NOTED OTHERWISE.

F. WIRE BRUSH AND CLEAN CONSTRUCTION JOINTS PRIOR TO POURING NEW CONCRETE.

G. REFERENCE THE APPROPRIATE DISCIPLINE DRAWINGS FOR SUBSLAB PIPING, FLOOR DRAINS AND SLAB AND WALL PENETRATIONS.

H. FOR PIPE INSTALLED HORIZONTALLY WITHIN SLAB, PROVIDE MAXIMUM OUTSIDE DIAMETER OF 30 PERCENT OF THE SLAB THICKNESS. PLACE CONDUIT OR PIPE BETWEEN THE TOP AND BOTTOM LAYERS OF REINFORCEMENT WITHIN THE CENTER THIRD OF THE SLAB. DO NOT SPACE CONDUITS OR PIPE CLOSER THAN THREE DIAMETERS ON CENTER.

I. PLACE SPECIFIED CONTINUOUS WATERSTOPS IN ALL EXTERIOR BELOW GRADE CONSTRUCTION JOINTS AND ELSEWHERE AS SHOWN IN DRAWINGS.

STRUCTURAL STEEL NOTES

A. DESIGN, DETAIL AND ERECT STRUCTURAL STEEL ELEMENTS IN ACCORDANCE WITH THE LATEST VERSION OF THE FOLLOWING:

   1. AISC SPECIFICATION FOR THE DESIGN, FABRICATION, AND ERECTION OF STRUCTURAL STEEL FOR BUILDINGS.
   2. AISC MANUAL OF STEEL CONSTRUCTION, ALLOWABLE STRESS DESIGN.
   3. AWS STRUCTURAL WELDING CODE, D1.1.

B. PROVIDE STRUCTURAL STEEL OF THE FOLLOWING ASTM DESIGNATIONS UNLESS NOTED OTHERWISE:

1. CHANNELS	ASTM A36
2. COLD FORMED STEEL TUBING (HSS)	ASTM A 500, GRADE B (46 KSI YIELD)
3. BASE PLATES, MISCELLANEOUS STEEL PLATES, AND RODS	ASTM A 36
4. HIGH STRENGTH BOLTS	ASTM A 325
5. HARDENED STEEL WASHERS	ASTM F 436

C. WELD MINIMUM SIZE AND STRENGTH

   1. PROVIDE MINIMUM SIZE OF FILLET WELDS AS SPECIFIED IN TABLE J2.4 OF THE AISC MANUAL.
   2. DEVELOP THE FULL TENSILE STRENGTH OF THE MEMBER ELEMENT JOINED, ON ALL SHOP AND FIELD WELDS, UNLESS NOTED OTHERWISE ON THE DRAWINGS.
   3. WHERE CONNECTIONS ARE NOTED ON DRAWINGS AS MOMENT CONNECTIONS, PROVIDE WELDS TO DEVELOP FULL FLEXURAL CAPACITY OF THE LESSER MEMBER.
   4. PROVIDE ELECTRODES FOR FIELD OR SHOP WELDING THAT CONFORM TO AWS D1.1 CLASS E70.

D. PROVIDE MINIMUM OF TWO BOLTS PER CONNECTION. MINIMUM BOLT DIAMETER TO BE 3/4-INCH.

E. PROVIDE BOLTS, NUTS AND WASHERS THAT ARE HOT DIP GALVANIZED ACCORDING TO ASTM A 153, CLASS C WHEN USED TO CONNECT STEEL ELEMENTS THAT ARE HOT DIP GALVANIZED AFTER FABRICATION AND ANY BOLTS IN CONTACT WITH TREATED SILL PLATES.

F. STEEL FABRICATION

   1. FABRICATE AND ASSEMBLE STRUCTURAL MEMBERS/ASSEMBLIES IN SHOP TO GREATEST EXTENT POSSIBLE.
   2. SPLICING OF STRUCTURAL STEEL MEMBERS IS PROHIBITED WITHOUT PRIOR APPROVAL BY THE BRINKER CONSTRUCTION MANAGER.
   3. FABRICATOR SHALL BE RESPONSIBLE FOR ALL ERRORS OF DETAILING ON THE SHOP DRAWINGS, ERRORS IN FABRICATION, AND THE CORRECT FITTING OF STRUCTURAL STEEL MEMBERS.

G. CONFORM TO THE AISC CODE OF STANDARD PRACTICE, FOR ERECTION TOLERANCES. FIELD MODIFICATION TO STRUCTURAL STEEL IS PROHIBITED WITHOUT PRIOR APPROVAL BY THE BRINKER CONSTRUCTION MANAGER.

H. CLEAN STEEL OF RUST, LOOSE MILL SCALE AND OTHER FOREIGN MATERIALS WHERE REQUIRED FOR FABRICATION, FITTING UP, OR WELDING.

I. DO NOT CUT STRUCTURAL STEEL MEMBERS FOR THE WORK OF OTHER TRADES WITHOUT PRIOR REVIEW AND APPROVAL OF THE BRINKER CONSTRUCTION MANAGER.

J. HOT DIP GALVANIZE AFTER FABRICATION STRUCTURAL STEEL AND THEIR CONNECTIONS PERMANENTLY EXPOSED TO THE OUTSIDE. SUCH ITEMS INCLUDE BUT ARE NOT LIMITED TO:

   1. CANOPY.
   2. AWNINGS.

   EXAMINE THE ARCHITECTURAL AND STRUCTURAL DRAWINGS FOR OTHER ITEMS THAT REQUIRE HOT DIPPED GALVANIZING.

K. PROVIDE GROUT FOR BASE PLATES THAT IS NON-SHRINK, NON-METALLIC GROUT WITH MINIMUM 28 DAY COMPRESSIVE STRENGTH OF 5000 PSI.

L. FURNISH STEEL SHOP DRAWINGS FOR ARCHITECT'S AND STRUCTURAL ENGINEERS REVIEW PRIOR TO FABRICATION. INCLUDE WELDING PROCEDURES, TESTING PROGRAMS FOR WELDING AND HIGH STRENGTH BOLTING, COATING MATERIAL AND ERECTION SEQUENCE ON SHOP DRAWINGS.

M. MILL STEEL COLUMN ENDS TO FIT FLUSH WITH BASE PLATE, CAP PLATE AND END PLATES. FIELD ASSEMBLY OF THESE STEEL ELEMENTS TO THE COLUMNS IS PROHIBITED.

N. PROVIDE TEMPORARY SHORING OR BRACING DURING CONSTRUCTION PHASE, PRIOR TO COMPLETING CONNECTIONS.

O. ALL STEEL SHALL BE PAINTED WITH PRIMER.

STRUCTURAL WOOD NOTES

A. WOOD FRAMING:

1. ALL WOOD STRUCTURES HAVE BEEN DESIGNED IN ACCORDANCE WITH THE NATIONAL DESIGN SPECIFICATION FOR WOOD CONSTRUCTION BY THE NATIONAL FOREST PRODUCTS ASSOCIATION.

2. ALL DIMENSIONAL LUMBER SHALL BE #2 DOUGLAS FIR SOUTH OR BETTER EXCEPT POSTS AND BEAMS WHICH SHALL BE #1 DOUGLAS FIR SOUTH OR BETTER STAMPED BY A MEMBER OF THE WWPA AND KILN DRIED TO 19% MAXIMUM MOISTURE CONTENT.

   DOUGLAS FIR SOUTH NO. 2 OR BETTER
   - Fb = 850 psi
   - Ft = 525 psi
   - Fv = 180 psi
   - Fc = 1,350 psi
   - Fc⊥ = 520 psi
   - E = 1,200,000 psi
   - Emn = 440,000 psi
   - G = 0.46

   DOUGLAS FIR SOUTH NO. 1 OR BETTER
   - Fb = 925 psi
   - Ft = 600 psi
   - Fv = 180 psi
   - Fc = 1,450 psi
   - Fc⊥ = 520 psi
   - E = 1,300,000 psi
   - Emn = 470,000 psi
   - G = 0.46

3. PRESSURE TREAT ALL WOOD PRODUCTS IN DIRECT CONTACT WITH THE FOUNDATION PER SPECIFICATION. GLAVANIZE ALL SILL BOLTS IN CONTACT WITH PRESSURE TREATED WOOD.

4. JOISTS, RAFTERS AND BEAMS SHALL NOT BE NOTCHED, EXCEPT WHERE SHOWN IN DETAILS. OBTAIN STRUCTURAL ENGINEER'S APPROVAL FOR ANY HOLES THROUGH OR NOTCHES IN THE HORIZONTAL MEMBERS.

5. SILL PLATES SHALL BE A MINIMUM 2 x (STUD WIDTH) TREATED SILL PLATES. ALL SHEAR WALLS SHALL BE FASTENED TO THE FOUNDATION AS SCHEDULED. SILL PLATES AT REMAINDER OF EXTERIOR WALLS SHALL BE FASTENED TO THE FOUNDATION WITH 5/8" DIAMETER x 18" EMBED ANCHOR BOLTS SPACED AT 48" ON CENTER. LOCATE ANCHOR BOLTS A MAXIMUM OF 9" FROM EACH END OF PLATE. AS AN ALTERNATE, 5/8" DIAMETER x 8" EMBED SIMPSON TITEN HD SCREW ANCHORS MAY BE USED AT NON-SHEARWALLS ONLY. SILL PLATES AT INTERIOR LOAD BEARING WALLS SHALL BE FASTENED TO THE FOUNDATION WITH ONE 5/8" DIAMETER x 18" EMBED ANCHOR BOLT AT 48" ON CENTER. SILL PLATES AT NON-LOAD BEARING INTERIOR WALLS SHALL BE FASTENED TO THE FOUNDATION WITH ONE SIMPSON PDPWL POWDER ACTUATED FASTENER WITH A MINIMUM EMBEDMENT OF 1 ¼" AT 16" ON CENTER.

6. ALL HARDWARE USED IN THE WORK SHALL BE SIMPSON STRONG-TIE, KC METALS, SILVER OR OTHER HARDWARE OF EQUAL CAPACITY AND HAVING ICBO APPROVAL.

7. A DOUBLE PLATE MADE OF TWO MEMBERS OF THE SAME WIDTH AS THE STUDS SHALL BE PLACED AT THE TOP OF EVERY BEARING PARTITION OR EXTERIOR WALL. SUCH DOUBLE PLATES SHALL BE LAPPED AT CORNER, AND JOINTS IN UPPER AND LOWER MEMBERS SHALL BE AT LEAST 4 FEET APART, EXCEPT AT CORNERS. SPLICE AS SHOWN IN 3-S202.

8. EXTERIOR WALLS AND BEARING WALLS SHALL BE FRAMED, UNLESS NOTES OTHERWISE, AS FOLLOWS:

MEMBER SIZE AND SPACING	LOADING
a. 2x6 STUDS AT 16" ON CENTER WITH (2) 2x6 STUDS DIRECTLY BELOW TRUSS BEARING AT ALL LOAD BEARING WALLS (REF 7-S203 FOR BUILT UP MEMBER) AND BLOCKING 8'-0" O.C. MIN.	ROOF

9. ALL NAILING SHALL BE DONE IN ACCORDANCE WITH THE MINIMUM REQUIREMENTS OF THE LOCAL BUILDING CODE, EXCEPT AS OTHERWISE SHOWN, AND SHALL BE DONE WITH COMMON WIRE NAILS UNLESS ANOTHER TYPE OF NAIL IS ALLOWED BY THE LOCAL BUILDING CODE. (RE: NAILING SCHEDULE)

10. BOLTS SHALL BE UNFINISHED BOLTS CONFORMING TO ASTM A307. BOLTS HOLES THROUGH THE WOOD SHALL BE DRILLED NO MORE THAN 1/16" GREATER THAN BOLT DIAMETER.

11. PROVIDE ALL LOAD BEARING HEADERS AS SHOWN ON THE FRAMING PLANS. FOR NON-LOAD BEARING INTERIOR WALLS PROVIDE JOIST HEADERS ABOVE OPENING IN ACCORDANCE WITH THE FOLLOWING SCHEDULE:

OPENING WIDTH	HEADER SIZE
UP TO 2'-6" WIDE	TRIPLE 2x6
2'-6 TO 3'-8" WIDE	TRIPLE 2x8
3'-8" TO 6'-0" WIDE	TRIPLE 2x10

12. PROVIDE JAMB STUDS, STEEL COLUMNS, OR WOOD POSTS AS INDICATED ON THE FOUNDATION PLAN, 7-S203 AND 8-S203. AT EACH END OF LVL BEAMS AND BUILT UP HEADERS.

B. PLYWOOD:

1. PLYWOOD SHALL BE EXTERIOR TYPE 1 WITH EXTERIOR GLUE CONFORMING TO PS-1 OF GRADE AS SPECIFIED. USE COMMON NAILS ONLY UNLESS OTHERWISE APPROVED BY THE STRUCTURAL ENGINEER AND LOCAL BUILDING OFFICIAL. ALL PLYWOOD SHALL BE 5 PLY MATERIAL.
   a. ROOF SHEATHING:
      i. ¾" CDX PLYWOOD SHEATHING (FLAT ROOF), P II 48/24 OR BETTER, LAID WITH FACE GRAIN PERPENDICULAR TO SUPPORTS WITH 10d NAILS (COMMON) AT 6" CENTER TO CENTER AT SUPPORT EDGES, AND AT 12" CENTER TO CENTER AT FIELD UNBLOCKED, UNLESS NOTED OTHERWISE. PROVIDE 16d NAILS (COMMON) AT 6" CENTER TO CENTER AT CONNECTION TO TOP PLATE OR LEDGER OF EXTERIOR WALLS AND ALL BLOCKING. LOCATE EDGE NAILING AT EXTERIOR WALLS 3" MIN. FROM EDGE OF PLYWOOD AT WALLS THAT SUPPORT ROOF TRUSSES.
   b. WALL SHEATHING:
      i. ½" (STRUCTURAL 1) "ZIP PANEL" SHEATHING (32/16 SPAN RATING) ATTACHED TO HEADERS, STUDS, PLATES, AND BLOCKING FRAMING WITH 8d NAILS (COMMON) AT 6" CENTER TO CENTER AT PANEL EDGES AND AT 12" CENTER TO CENTER AT FIELD.
   c. SHEAR WALLS:
      i. REFER TO SHEAR WALL SCHEDULE, 3-S202.

2. ALL PLYWOOD SHEATHING AT WALLS AND ROOF SHALL BE INSPECTED AND APPROVED BY BUILDING INSPECTOR PRIOR TO COVERING WITH FLOORING OR ROOFING MATERIAL.

C. REDBUILT LAMINATED VENEER LUMBER (REDLAM LVL):

1. ALL LAMINATED VENEER LUMBER SHALL BE DESIGNED AND MANUFACTURED TO THE STANDARDS SET FORTH IN THE NER-481 REPORT.
2. ALLOWABLE UNIT STRESSES REQUIRED FOR DRY CONDITIONS OF USE FOR LAMINATED VENEER LUMBER SHALL BE AS FOLLOWS:
   a. BENDING............2,900 PSI
   b. COMPRESSION PARALLEL TO GRAIN............2,635 PSI
   c. HORIZONTAL SHEAR............285 PSI
   d. COMPRESSION PERPENDICULAR TO GRAIN............750 PSI
   e. MODULUS OF ELASTICITY............ 2,000,000 PSI
3. LAMINATED VENEER LUMBER MEMBER SIZES SHOWN ARE NET; OTHER MEMBER SIZES ARE NOMINAL.

MANUFACTURED TRUSSES: (DEFERRED SUBMITTAL)

A. MANUFACTURED OPEN-WEB PIN CONNECTED TRUSSES SHALL BE BY REDBUILT, LLC **(NO SUBSTITUTIONS ARE ALLOWED)**.

B. TRUSSES AND ASSOCIATED CONNECTIONS TO SUPPORT STRUCTURE (INCLUDING UPLIFT CONNECTIONS) SHALL BE DESIGNED FOR THE DEAD LOADS OF THE MATERIALS AND MECHANICAL EQUIPMENT SHOWN ON THE DRAWINGS PLUS A LIVE LOAD, SNOW LOAD, AND WIND LOAD AS INDICATED IN THESE NOTES.

C. MANUFACTURER SHALL FURNISH SHOP DRAWINGS AND CALCULATIONS SIGNED BY A LICENSED ENGINEER IN THE STATE THAT THIS PROJECT WILL BE CONSTRUCTED IN AND SHALL BE RESPONSIBLE FOR ALL REQUIREMENTS OF THE BUILDING DEPARTMENT.

D. SHOP DRAWINGS AND CALCULATIONS SHALL BE SUBMITTED TO THE BUILDING DEPARTMENT AND THE ENGINEER FOR APPROVAL PRIOR TO FABRICATION.

E. SHOP DRAWINGS INCLUDING LATERAL BRACING DETAILS SHALL BE AVAILABLE ON THE JOB SITE DURING TIMES OF INSPECTIONS, AND SHALL BEAR CLEAR INDICATION THAT THEY HAVE BEEN REVIEWED BY THE ENGINEER OF RECORD.

F. ALL HARDWARE REQUIRED FOR CONNECTIONS BETWEEN TRUSSES SHALL BE DESIGNED AND SPECIFIED BY THE REGISTERED TRUSS ENGINEER OF RECORD.

G. TRUSS SHOP DRAWINGS MUST BE APPROVED WITHIN 30 DAYS OF PERMIT ISSUANCE. NO INSPECTIONS WILL BE PERFORMED IF TRUSS DRAWINGS ARE NOT APPROVED AFTER 30 DAYS.

H. THIRTY-DAY TRUSS SUBMITTAL POLICY WILL REMAIN IN EFFECT UNTIL TRUSSES ARE APPROVED.

DESIGN CRITERIA:

1. LOADING:

MAIN ROOF TOP CHORD LIVE LOAD:	20 psf (NON-REDUCIBLE)
MAIN ROOF TOP CHORD DEAD LOAD	10 psf
ROOF BOTTOM CHORD DEAD LOAD:	10 psf
NET WIND UPLIFT (SERVICE) (TRIB AREA = 50 SF.):	27 psf

2. MAXIMUM LIVE LOAD DEFLECTION IS TO BE L/240.
3. MAXIMUM TOTAL LOAD DEFLECTION IS TO BE L/240.
4. DESIGN TRUSSES FOR PARAPET KICKER REACTION AND SNOWDRIFT PROFILE IF REQUIRED PER DETAILS SHOWN ON SHEETS S202, S203 AND S204. REF FRAMING PLAN AND DETAILS FOR TRUSS DESIGN LOADS AT SUSPENDED BULKHEADS OVERFRAMED WALLS AND ROOF'S AND RTU'S.
5. REF DETAILS FOR TRUSS SEAT AND SEAT CONNECTION DESIGN TO WITHSTAND OUT OF PLANE WIND LOADING.

TYPICAL LUMBER NAILING SCHEDULE

NAILING SHOWN IS TYPICAL EXCEPT AS NOTED ON PLANS. USE COMMON NAILS.

1. JOIST TO SILL OR GIRDER, TOENAILS	3-8d
2. BLOCKING TO JOIST AND TOP PLATE, TOE NAIL EACH END	2-8d
3. 1"x6" SUBFLOOR OR LESS TO EACH JOIST, FACE NAIL	2-8d
4. WIDER THAN 1"x6" SUBFLOOR TO EACH JOIST, FACE NAIL	3-8d
5. 2" SUBFLOOR TO JOIST OR GIRDER, BLIND AND FACE NAIL	2-16d
6. SOLE PLATE TO JOIST, HEADER, OR BLOCKING, FACE NAIL	2-16d AT 12"O.C.
7. TOP PLATE TO STUD, END NAIL	2-16d
8. STUD TO SOLE PLATE	2-16d END NAILS OR 4-8d TOE NAILS
9. DOUBLE STUDS, NAIL	RE: 7-S203
10. DOUBLED TOP PLATES, FACE NAIL	16d AT 16"O.C.
11. TOP PLATES, LAPS AND INTERSECTIONS	RE: 3-S202
12. CONT. HEADER, TWO PIECES, CONT. HEADER, THREE PIECES	16d AT 16"O.C. ALONG EA. EDGE RE: 2-S202
13. CEILING JOISTS TO PLATE, TOE NAIL	3-8d
14. CONTINUOUS HEADER TO STUD, TOE NAIL	4-8d
15. CEILING JOISTS, LAPS OVER PARTITIONS, FACE NAIL	3-16d
16. CEILING JOISTS TO PARALLEL RAFTERS, FACE NAIL	3-16d
17. RAFTER TO PLATE, TOENAIL	3-8d
18. 1" BRACE TO EACH STUD AND PLATE, FACE NAIL	2-8d
19. 1"x8" SHEATHING OR LESS TO EACH BEARING, FACE NAIL	3-8d
20. WIDER THAN 1"x8" SHEATHING TO EACH BEARING, FACE NAIL	3-8d
21. BUILT-UP CORNER STUDS	16d AT 24"O.C.
22. BUILT-UP GIRDER AND BEAMS	20d AT 32"O.C. AT TOP & BOTTOM 2-20d AT ENDS AND AT EA. SPLICE
23. 2" PLANKS	2-16d AT EACH BEARING

EPOXY ANCHORED DOWELS AND BOLTS

A. EPOXY ANCHORS USED FOR FIELD REPAIRS OR SUBSTITUTIONS SHALL BE MANUFACTURED BY SIMPSON STRONG-TIE AND APPROVED BY THE EOR.

B. INSTALL BOLTS AND DOWELS IN ACCORDANCE WITH CURRENT ICC REPORT FOR THE BOLT, AND RECOMMENDATIONS OF THE MANUFACTURER. FOLLOW MANUFACTURER'S INSTRUCTIONS EXPLICITLY.

C. INSTALL BOLTS AND DOWELS PERPENDICULAR TO THE FACE OF CONCRETE, UNLESS OTHERWISE INDICATED IN THE DRAWINGS.

D. DIAMETER OF DRILLED HOLES SHALL BE IN ACCORDANCE WITH MANUFACTURER'S RECOMMENDATIONS. DO NOT REDIRECT HOLES ALONG LENGTH OF BOLT.

E. DRILL HOLES IN CONTINUOUS OPERATION. BLOW DUST FROM THE HOLE USING COMPRESSED AIR.

F. FILL ABANDONED HOLES WITH EPOXY GROUT.

G. INSTALLATION OF EPOXY ANCHORED DOWELS AND BOLTS SHALL BE CONTINUOUSLY INSPECTED BY THE TESTING LABORATORY TO ENSURE THAT HOLES ARE OF THE PROPER DIAMETER AND LENGTH, ARE PROPERLY CLEANED, AND THAT BOLTS ARE INSTALLED CORRECTLY.

STRUCTURAL MASONRY NOTES

A. REINFORCED MASONRY WORK AND MATERIALS TO BE IN ACCORDANCE WITH THE BUILDING CODE REQUIREMENTS FOR MASONRY STRUCTURES A.C.I. 530/ ASCE 5/ TMS 402.

B. REINFORCED MASONRY TO CONFORM TO THE SPECIFICATIONS FOR MASONRY STRUCTURES ACI 530.1/ ASCE 6/ TMS 602 (WITH THE EXCEPTIONS NOTED IN JOB SPECIFICATIONS).

C. PROVIDE CONCRETE MASONRY UNITS (CMU) OF NORMAL WEIGHT (125 PCF), GRADE N, TYPE 1, 1900 PSI COMPRESSIVE STRENGTH ON NET AREA, CONFORMING TO THE LATEST EDITION OF ASTM C 90. LAY UNITS IN RUNNING BOND UNLESS OTHERWISE NOTED.

D. PROVIDE MASONRY MORTAR MEETING THE REQUIREMENTS OF TYPE S PER ASTM C 270. PROVIDE AGGREGATES FOR MORTAR CONFORMING TO ASTM C 144. PROVIDE MORTAR WITH A MINIMUM COMPRESSIVE STRENGTH OF 1,800 PSI AT 28 DAYS.

E. PROVIDE MASONRY GROUT WITH MINIMUM 28-DAY COMPRESSIVE STRENGTH OF 2,500 PSI TESTED IN ACCORDANCE WITH ASTM C 1019. GROUT TO MEET THE MINIMUM REQUIREMENTS SPECIFIED IN ASTM C 476.

F. PROVIDE MASONRY ASSEMBLAGES WITH MINIMUM PRISM STRENGTH (F'm) OF 1,500 PSI, TESTED IN ACCORDANCE WITH ASTM C 140.

G. PROVIDE CONCRETE MASONRY UNITS IN ACCORDANCE ASTM C 426 LIMITS FOR DRYING SHRINKAGE OF CONCRETE BLOCKS.

H. PROVIDE VERTICAL REINFORCEMENT IN CMU WALLS AS SHOWN IN DRAWINGS. FILL THE REINFORCED CELLS SOLID WITH GROUT. MAXIMUM HEIGHT OF GROUT POURS TO BE AS PER ACI 530.1 TABLE 7.

I. PROVIDE HORIZONTAL JOINT REINFORCING IN WALLS AT 16" ON CENTER VERTICAL SPACING. JOINT REINFORCING TO BE HOT DIP GALVANIZED, 3/16" SIDE RODS WITH 9 GAGE CROSS TIES, TRUSS TYPE, CONFORMING TO A.S.T.M. A 82. SPACE JOINT REINFORCEMENT AT 8" ON CENTER IN THE PARAPETS. LAP SPLICE ENDS A MINIMUM OF 12" AT SPLICES.

J. LAY HOLLOW UNITS WITH FULL MORTAR COVERAGE ON HORIZONTAL AND VERTICAL FACE SHELLS. PROVIDE FULL MORTAR COVERAGE FOR WEBS WHEN ADJACENT TO GROUTED CELLS.

K. ALIGN VERTICAL CELLS TO BE FILLED WITH GROUT TO PROVIDE CONTINUOUS UNOBSTRUCTED VERTICAL CELLS. REMOVE OVERHANGING MORTAR OR OTHER OBSTRUCTION AND DEBRIS FROM THE INSIDES OF SUCH CELL WALLS. PROVIDE GROUT WITH 8 INCH SLUMP AND CONSOLIDATE BY MEANS OF HAND TAMPING TO ENSURE COMPLETE FILLING OF CELLS.

L. PROVIDE 8-INCH HIGH BOND BEAM (MINIMUM DEPTH UNLESS OTHERWISE NOTED) AT TOP OF ALL CMU WALLS. REINFORCE BOND BEAM AS INDICATED. IF BOND BEAMS AT INTERSECTING WALLS MEET AT DIFFERENT ELEVATIONS, EXTEND BOND BEAMS AROUND INTERSECTING CORNER TO FIRST INTERIOR REINFORCED CELL, BUT NOT LESS THAN 4 FEET. CONSTRUCT BOND BEAMS WITH PORTLAND CEMENT GROUT, 2,500 PSI MINIMUM COMPRESSIVE STRENGTH AT 28 DAYS AND A MAXIMUM AGGREGATE SIZE OF 3/8".

M. PROVIDE MINIMUM 1 #5 VERTICAL REINFORCING AT CORNERS OF CMU WALLS. PROVIDE 2 #5 VERTICAL REINFORCING AT ENDS OF WALLS, EACH SIDE OF CONTROL JOINT, AND EACH SIDE OF WALL OPENINGS. PROVIDE MINIMUM 3/8" THROUGH-WALL CONTROL JOINTS AT 40'-0" MAXIMUM SPACING OR AT LOCATIONS DETAILED ON THE ARCHITECTURAL DRAWINGS.

N. INSTALL ANCHORS, ACCESSORIES, AND OTHER ITEMS TO BE BUILT IN AS WORK PROGRESSES.

O. LAP SPLICE VERTICAL REINFORCING MINIMUM OF 48 BAR DIAMETERS OR 24 INCHES, WHICHEVER IS GREATER.

P. PERFORM CUTTING AND FITTING OF MASONRY WITH MASONRY SAWS PROVIDING CUT FINISHED UNITS.

Q. GROUT CELLS AT OR BELOW FINISHED GRADE ARE TO BE GROUTED SOLID.

R. WHEN A FOUNDATION DOWEL DOES NOT LINE UP WITH A VERTICAL CORE, DO NOT SLOPE DOWEL MORE THAN ONE HORIZONTAL TO SIX VERTICAL.

STRUCTURAL ENGINEER:

wallace design collective

wallace design collective, pc
structural · civil · landscape · survey
123 north martin luther king jr. boulevard
tulsa, oklahoma 74103
918.584.5858 · 800.364.5858

CORPORATE:
BRINKER RESTAURANT CORPORATION, A VIRGINIA CORPORATION
3000 OLYMPUS BLVD.
DALLAS, TEXAS 75019
972.980.9917
www.brinker.com

09/23/2024

ISSUE FOR BID

THESE DOCUMENTS ARE FOR BIDDING PURPOSES ONLY. DO NOT USE FOR CONSTRUCTION.

RESTAURANT #CH1679
PROTOTYPE 18.5FS

CHILI'S TOOELE

SWQ OF W 1000 NORTH & MAIN STREET
TOOELE, UT 84074

CLIENT: BRINKER RESTAURANT, CORP. A VIRGINIA CORPORATION

DATE	DESCRIPTION
6/27/2024	ISSUE FOR PERMIT
9/23/2024	ISSUE FOR BID

#	DATE	DESCRIPTION
1	09.20.24	CITY COMMENTS

PROJECT NUMBER:

CHI24007

SHEET TITLE:

STRUCTURAL NOTES

SHEET NUMBER:

S001

SPECIAL INSPECTIONS SCHEDULE

SPECIAL INSPECTION	FREQ.	REFERENCED STANDARD(S)
SOILS:		
1. VERIFY MATERIALS BELOW FOOTINGS ARE ADEQUATE TO ACHIEVE THE DESIGN BEARING CAPACITY. VERIFY MATERIALS BELOW AND ADJACENT TO LIGHT POLE PIER FOUNDATIONS ARE ADEQUATE TO ACHIEVE THE LATERAL AND END BEARING CAPACITY.	PERIODIC	IBC 1705.6
2. VERIFY EXCAVATIONS ARE EXTENDED TO PROPER DEPTH AND HAVE REACHED PROPER MATERIAL.	PERIODIC	
3. PERFORM CLASSIFICATION AND TESTING OF COMPACTED FILL MATERIALS.	PERIODIC	
4. VERIFY USE OF PROPER MATERIALS, DENSITIES AND LIFT THICKNESS DURING PLACEMENT AND COMPACTION OF COMPACTED FILL.	CONT.	
5. PRIOR TO THE PLACEMENT OF COMPACTED FILL, OBSERVE SUBGRADE AND VERIFY THAT THE SITE HAS BEEN PREPARED PROPERLY.	PERIODIC	
CONCRETE:		
1. INSPECTION OF REINFORCING STEEL, SIZE AND PLACEMENT	PERIODIC	ACI 318: Ch. 20, 25.2, 25.3, 26.6.1–26.6.3
2. VERIFYING USE OF REQUIRED DESIGN MIX	PERIODIC	ACI 318: Ch. 19, 26.4.3, 26.4.4
3. SAMPLING FRESH CONCRETE AND PERFORMING SLUMP, AIR CONTENT, AND DETERMINING THE TEMPERATURE OF FRESH CONCRETE AT THE TIME OF MAKING SPECIMENS FOR STRENGTH TESTS.	CONT.	ASTM C 172; ASTM C 31; ACI 318: 26.4, 26.12
4 INSPECTION OF CONCRETE PLACEMENT FOR PROPER APPLICATION TECHNIQUES	CONT.	ACI 318: 26.5
5. INSPECTION FOR MAINTENANCE OF SPECIFIED CURING TEMPERATURE AND TECHNIQUES	PERIODIC	ACI 318: 26.5.3–26.5.5
6. INSPECTION OF ANCHORS CAST IN CONCRETE	PERIODIC	ACI 318: 217.8.2
7. INSPECTION OF FORMWORK FOR SHAPE, LOCATION AND DIMENSIONS OF THE CONCRETE MEMBER BEING FORMED	PERIODIC	ACI 318: 26.11.1.2(b)
STEEL CONSTRUCTION:		
1. MATERIAL VERIFICATION OF HIGH-STRENGTH BOLTS, NUTS, AND WASHERS, HIGH-STRENGTH BOLTING:		APPLICABLE ASTM MATERIAL SPECIFICATIONS; AISC 360, SEC. A3.4
A. IDENTIFICATION MARKINGS TO CONFORM TO ASTM STANDARDS SPECIFIED IN THE APPROVED CONSTRUCTION DOCUMENTS	PERIODIC	
2. INSPECTION OF BEARING-TYPE CONNECTIONS	PERIODIC	AISC LRFD Sec. M2.5
3. MATERIAL VERIFICATION OF WELD FILLER MATERIALS:		
A. IDENTIFICATION MARKINGS TO CONFORM TO AWS SPECIFICATION IN THE APPROVED CONSTRUCTION DOCUMENTS	PERIODIC	AISC 360, SECTION A3.5 AND APPLICABLE AWS A5 DOCUMENTS
B. MANUFACTURER'S CERTIFICATE OF COMPLIANCE REQUIRED	PERIODIC	
4. INSPECTION OF WELDING:		
A. SINGLE-PASS FILLET WELDS $\leq$ 5/16"	PERIODIC	AWS D1.1
MASONRY CONSTRUCTION		
1. AS MASONRY CONSTRUCTION BEGINS, THE FOLLOWING SHALL BE VERIFIED TO ENSURE COMPLIANCE:		
A. PROPORTIONS OF SITE PREPARED MORTAR.	PERIODIC	ACI 530.1/ASCE 6/TMS 602: Art. 2.6A
B. CONSTRUCTION OF MORTAR JOINTS.		ACI 530.1/ASCE 6/TMS 602: Art. 3.3B
C. LOCATION OF REINFORCEMENT AND CONNECTORS.		ACI 530.1/ASCE 6/TMS 602: Art. 3.4, 3.6A
D. VERIFICATION OF f'm.		ACI 530.1/ASCE 6/TMS 602: Art. 1.5
2. DURING CONSTRUCTION THE INSPECTION PROGRAM SHALL VERIFY:		
A. SIZE AND LOCATION OF STRUCTURAL ELEMENTS.	PERIODIC	ACI 530.1/ASCE 6/TMS 602: Art. 3.3F
B. TYPE, SIZE, AND LOCATION OF ANCHORS, INCLUDING OTHER DETAILS OF ANCHORAGE OF MASONRY TO STRUCTURAL MEMBERS, FRAMES, OR OTHER CONSTRUCTION.		ACI 530/ASCE 5/TMS 402: Sec. 1.2.2(a), 1.16.1
C. SPECIFIED SIZE, GRADE, AND TYPE OF REINFORCEMENT AND ANCHOR BOLTS		ACI 530.1/ASCE 6/TMS 402: Sec. 1.15; ACI 530.1/ASCE 6/TMS 602: Art. 2.4, 3.4
E. PROTECTION OF MASONRY DURING COLD WEATHER (TEMPERATURE BELOW 40° F) OR HOT WEATHER (TEMPERATURE ABOVE 90° F)		ACI 530.1/ASCE 6/TMS 602: Art. 1.8C, 1.8D IBC SECTION 2104.3:2104.4
3. PRIOR TO GROUTING, THE FOLLOWING SHALL BE VERIFIED TO ENSURE COMPLIANCE:		
A. GROUT SPACE IS CLEAN.	PERIODIC	ACI 530.1/ASCE 6/TMS 602: Art. 3.2D
B. PLACEMENT OF REINFORCEMENT AND CONNECTORS.		ACI 530/ASCE 5/TMS 402: Sec. 1.13; ACI 530.1/ASCE 6/TMS 602: Art. 3.4
C. PROPORTIONS OF SITE PREPARED GROUT.		ACI 530.1/ASCE 6/TMS 602: Art. 2.6B
D. CONSTRUCTION OF MORTAR JOINTS.		ACI 530.1/ASCE 6/TMS 602: Art. 3.3B
4. GROUT PLACEMENT SHALL BE VERIFIED TO ENSURE COMPLIANCE WITH CODE AND CONSTRUCTION DOCUMENT PROVISIONS.	CONT.	ACI 530.1/ASCE 6/TMS 602: Art. 3.5
5. PREPARATION OF ANY REQUIRED GROUT SPECIMENS, MORTAR SPECIMENS, AND/OR PRISMS SHALL BE OBSERVED.	PERIODIC	IBC SECTION 2105.2.2, 2105.3 ACI 530.1/ASCE 6/TMS 602: Art. 1.4
6. COMPLIANCE WITH REQUIRED INSPECTION PROVISIONS OF THE CONSTRUCTION DOCUMENTS AND THE APPROVED SUBMITTALS SHALL BE VERIFIED.	PERIODIC	ACI 530.1/ASCE 6/TMS 602: Art. 1.5
ADHESIVE ANCHORS/REINFORCEMENT:		
1. DURING PLACEMENT OF ADHESIVE ANCHORS OR REINFORCEMENT EMBEDDED WITH ADHESIVE (AS SPECIFIED ON THE CONSTRUCTION DOCUMENTS) IN MASONRY AND CONCRETE:		
A. SIZE AND EMBEDMENT OF ANCHORS/REINF.	CONTINUOUS	MANUFACTURERS INSTALLATION INSTRUCTIONS ACI 318: 17.8.2.4, 17.8.2
B. ANCHORS/REINFORCEMENT INSTALLED PER MANUFACTURERS RECOMMENDATIONS.	CONTINUOUS	
WOOD CONSTRUCTION		
1. SPECIAL INSPECTION OF SITE BUILT ASSEMBLIES SHALL BE IN ACCORDANCE WITH SECTION 1705.5	PERIODIC	IBC SECTION 1705.5
2. INSPECTION OF WOOD STRUCTURAL PANEL SHEAR WALL AND ROOF DIAPHRAGM SHEATHING GRADE AND THICKNESS.	PERIODIC	
3. VERIFICATION OF THE NOMINAL SIZE OF FRAMING MEMBERS AT ADJOINING PANEL EDGES.	PERIODIC	
4. VERIFICATION OF THE NAIL OR STAPLE DIAMETER AND LENGTH, THE NUMBER OF FASTENER LINES AND THE SPACING BETWEEN FASTENERS IN EACH LINE AND AT EDGE MARGINS AT SHEAR WALL AND ROOF DIAPHRAGM.	PERIODIC	
5. VERIFICATION OF THE STRAPPING SIZE, HARDWARE AND ASSOCIATED CONNECTIONS.	PERIODIC	

1

ENTIRE SHEET ADDED AS PART OF REVISION 1

STRUCTURAL ENGINEER:

wallace design collective

wallace design collective, pc
structural · civil · landscape · survey
125 north main sutherland boulevard
tulsa oklahoma 74103
918.584.8358 · 800.364.8858

CORPORATE:
BRINKER RESTAURANT CORPORATION, A VIRGINIA CORPORATION
3000 OLYMPUS BLVD.
DALLAS, TEXAS 75019
972.980.9917
www.brinker.com

09/23/2024
ISSUE FOR BID
THESE DOCUMENTS ARE FOR BIDDING PURPOSES ONLY. DO NOT USE FOR CONSTRUCTION.

RESTAURANT #CH1679
PROTOTYPE 18.5FS

CHILI'S TOOELE
SWQ OF W 1000 NORTH & MAIN STREET
TOOELE, UT 84074

CLIENT: BRINKER RESTAURANT CORP. A VIRGINIA CORPORATION

DATE	DESCRIPTION
6/27/2024	ISSUE FOR PERMIT
9/23/2024	ISSUE FOR BID

	DATE	DESCRIPTION
1	09.20.24	CITY COMMENTS

PROJECT NUMBER:
CHI24007

SHEET TITLE:
SPECIAL INSPECTIONS

SHEET NUMBER:
S002

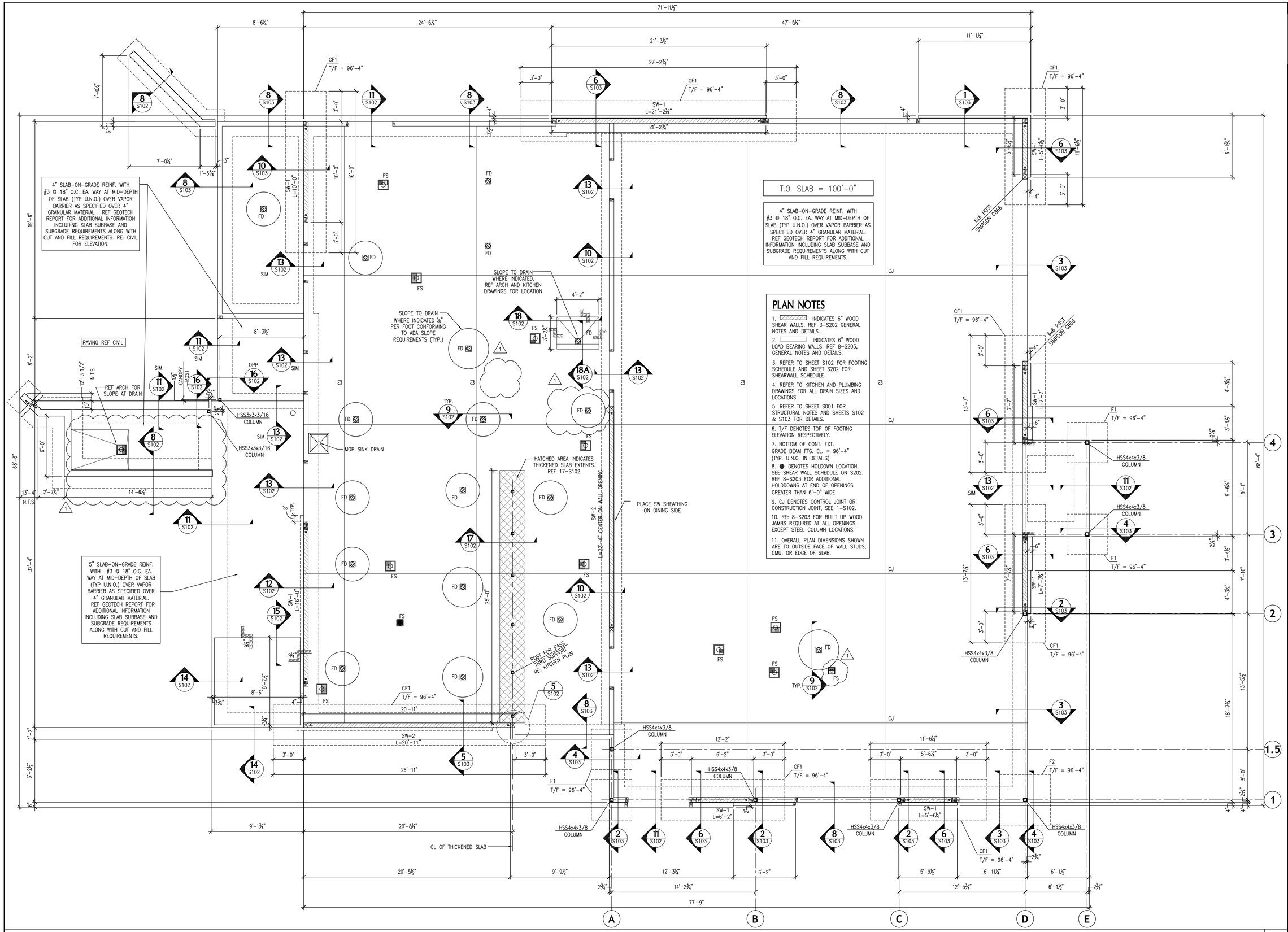

PLAN NOTES

1. ▨ INDICATES 6" WOOD SHEAR WALLS. REF 3-S202 GENERAL NOTES AND DETAILS.
2. ▭ INDICATES 6" WOOD LOAD BEARING WALLS. REF 8-S203, GENERAL NOTES AND DETAILS.
3. REFER TO SHEET S102 FOR FOOTING SCHEDULE AND SHEET S202 FOR SHEARWALL SCHEDULE.
4. REFER TO KITCHEN AND PLUMBING DRAWINGS FOR ALL DRAIN SIZES AND LOCATIONS.
5. REFER TO SHEET S001 FOR STRUCTURAL NOTES AND SHEETS S102 & S103 FOR DETAILS.
6. T/F DENOTES TOP OF FOOTING ELEVATION RESPECTIVELY.
7. BOTTOM OF CONT. EXT. GRADE BEAM FTG. EL. = 96'-4" (TYP. U.N.O. IN DETAILS)
8. ● DENOTES HOLDOWN LOCATION, SEE SHEAR WALL SCHEDULE ON S202. REF 8-S203 FOR ADDITIONAL HOLDDOWNS AT END OF OPENINGS GREATER THAN 6'-0" WIDE.
9. CJ DENOTES CONTROL JOINT OR CONSTRUCTION JOINT, SEE 1-S102.
10. RE: 8-S203 FOR BUILT UP WOOD JAMBS REQUIRED AT ALL OPENINGS EXCEPT STEEL COLUMN LOCATIONS.
11. OVERALL PLAN DIMENSIONS SHOWN ARE TO OUTSIDE FACE OF WALL STUDS, CMU, OR EDGE OF SLAB.

FOUNDATION PLAN
1/4"=1'-0"

1

STRUCTURAL ENGINEER:
wallace design collective
wallace design collective, pc
structural · civil · landscape · survey
12transit · north lincoln sing2 boulevard
tulsa, oklahoma 74133
918.584.5858 · 800.364.5868

CORPORATE:
BRINKER RESTAURANT CORPORATION, A VIRGINIA CORPORATION
3000 OLYMPUS BLVD.
DALLAS, TEXAS 75019
972.980.9917
www.brinker.com

09/23/2024

ISSUE FOR BID

THESE DOCUMENTS ARE FOR BIDDING PURPOSES ONLY. DO NOT USE FOR CONSTRUCTION.

RESTAURANT #CH1679
PROTOTYPE 18.5FS

CHILI'S TOOELE

SWQ OF W 1000 NORTH & MAIN STREET
TOOELE, UT 84074

CLIENT: BRINKER RESTAURANT CORP. A VIRGINIA CORPORATION

DATE	DESCRIPTION
6/27/2024	ISSUE FOR PERMIT
9/23/2024	ISSUE FOR BID

	DATE	DESCRIPTION
1	09.20.24	CITY COMMENTS

PROJECT NUMBER:
CHI24007

SHEET TITLE:
FOUNDATION PLAN

SHEET NUMBER:
S101

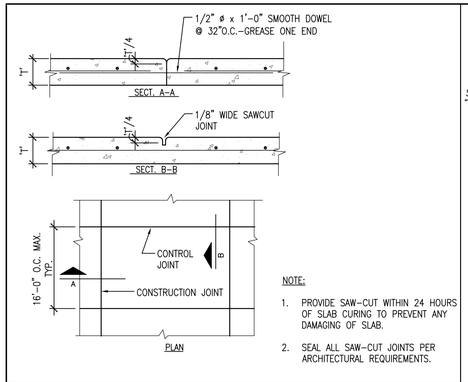

NOTE:

1. PROVIDE SAW-CUT WITHIN 24 HOURS OF SLAB CURING TO PREVENT ANY DAMAGING OF SLAB.
2. SEAL ALL SAW-CUT JOINTS PER ARCHITECTURAL REQUIREMENTS.

SLAB CONSTRUCTION & CONTROL JOINT DETAILS 1

3/4" = 1'-0"

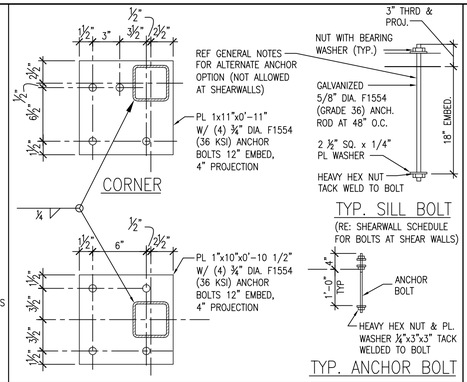

TYPICAL BASE PLATE AND SILL ANCHOR BOLT 2

1 1/2" = 1'-0"

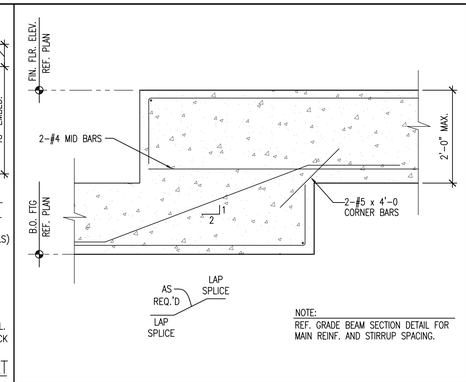

NOTE:
REF. GRADE BEAM SECTION DETAIL FOR MAIN REINF. AND STIRRUP SPACING.

TYPICAL FOOTING BEAM STEP DETAIL 3

3/4" = 1'-0"

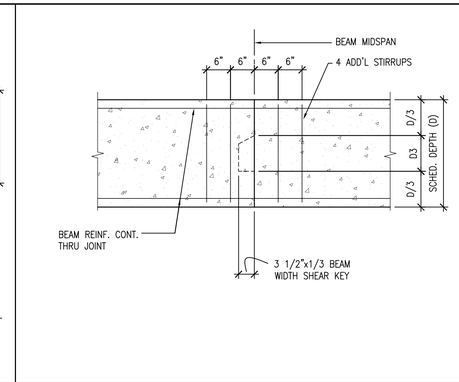

TYPICAL GRADE BEAM REBAR SPLICE DETAIL 4

3/4" = 1'-0"

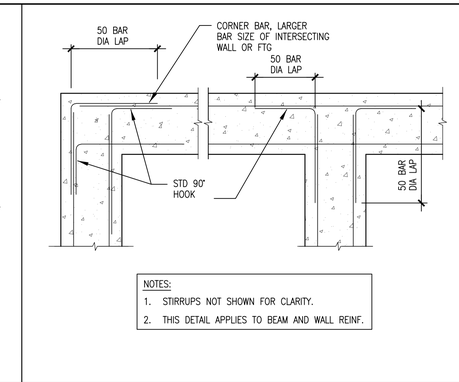

NOTES:

1. STIRRUPS NOT SHOWN FOR CLARITY.
2. THIS DETAIL APPLIES TO BEAM AND WALL REINF.

TYPICAL GRADE BEAM CORNER BAR DETAIL 5

3/4" = 1'-0"

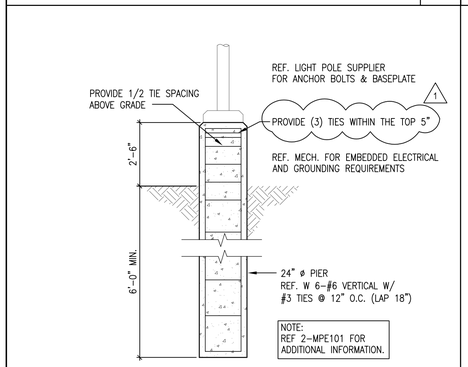

LIGHT POLE BASE DETAIL 6

1/2"=1'-0"

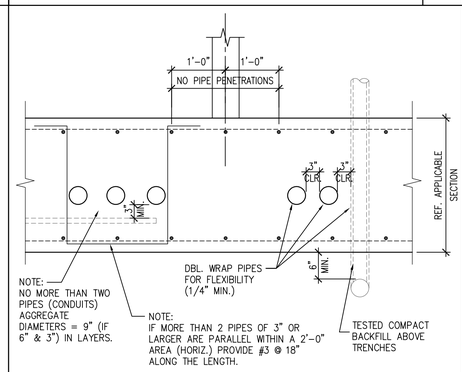

TYP. GRADE BEAM FOOTING PENETRATION DETAIL 7

3/4" = 1'-0"

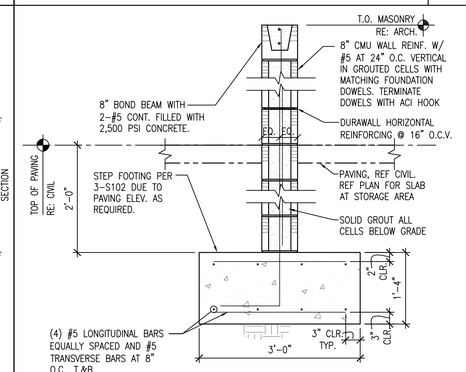

CMU SERVICE YARD SCREENWALL DETAIL 8

3/4"=1'-0"

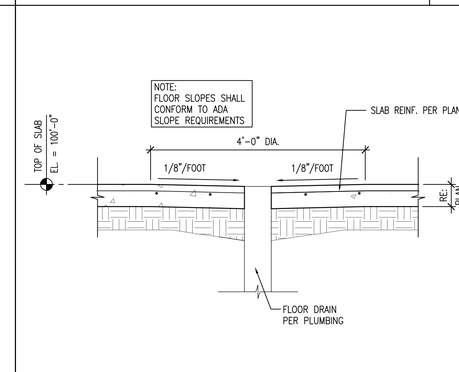

TYPICAL SLOPED FLOOR DRAIN DETAIL 9

3/4"=1'-0"

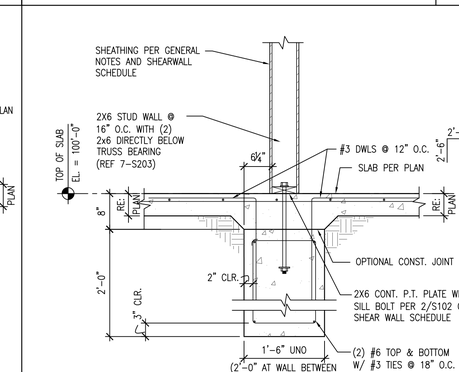

INTERIOR GRADE BEAM FOOTING DETAIL 10

3/4"=1'-0"

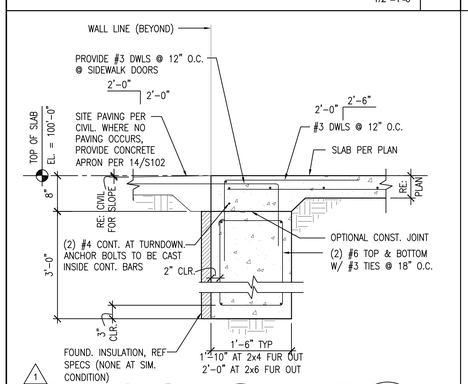

EXTERIOR GRADE BEAM FOOTING AT OPENING 11

3/4"=1'-0"

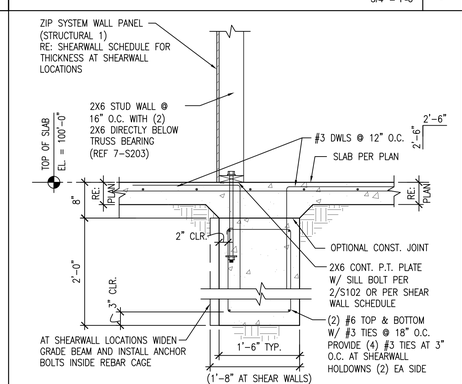

INTERIOR GRADE BEAM FOOTING AT COOLER AND OUTSIDE STORAGE 12

3/4"=1'-0"

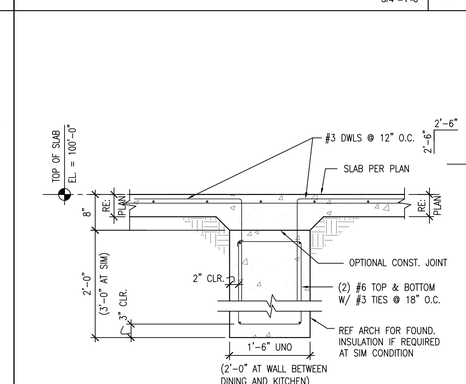

INTERIOR GRADE BEAM FOOTING AT OPENING 13

3/4"=1'-0"

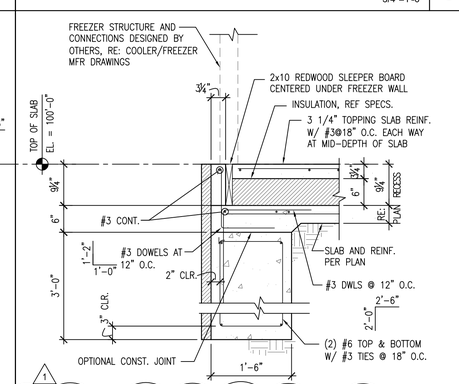

GRADE BEAM FOOTING AT COOLER SLAB RECESS 14

3/4"=1'-0"

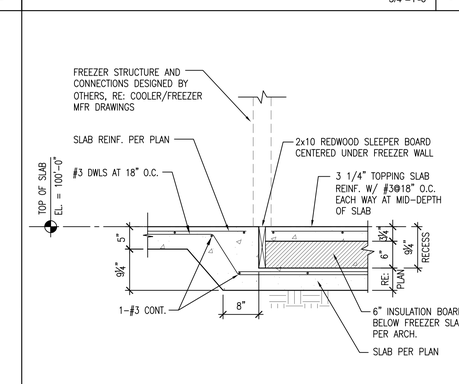

COOLER SLAB RECESS DETAIL 15

3/4"=1'-0"

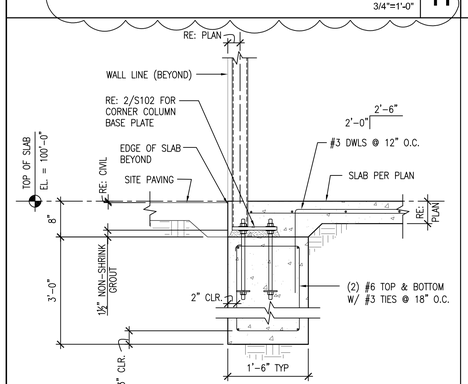

CANOPY POST DETAIL 16

3/4" = 1'-0"

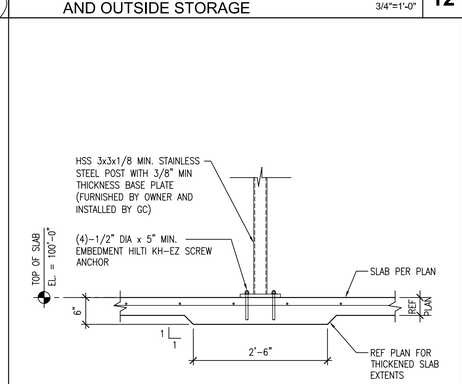

TYPICAL PASS THRU COUNTER POST DETAIL 17

3/4" = 1'-0"

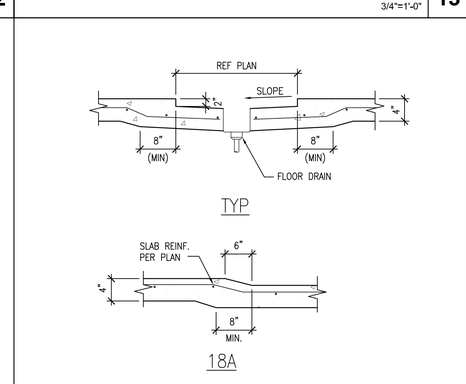

SLAB RECESS AT ICE MACHINE 18

3/4" = 1'-0"

SPREAD FOOTING SCHEDULE

MARK	WIDTH	LENGTH	DEPTH	BTM. REINFORCEMENT	TOP REINFORCEMENT
F1	4'-0"	4'-0"	1'-0"	#5 AT 8" EA WAY	–
CF1	4'-0"	RE: PLAN	1'-0"	#5 AT 8" EA WAY	#5 AT 8" EA WAY
F2	5'-0"	5'-0"	1'-0"	#5 AT 8" EA WAY	–

STRUCTURAL ENGINEER:
wallace design collective
wallace design collective, pc
structural · civil · landscape · survey
12944 south main street sandy, boulevard
tulsa, oklahoma 74133
918.564.5858 · 800.364.5868

CORPORATE:
BRINKER RESTAURANT CORPORATION, A VIRGINIA CORPORATION
3000 OLYMPUS BLVD.
DALLAS, TEXAS 75019
972.980.9917
www.brinker.com

09/23/2024

ISSUE FOR BID

THESE DOCUMENTS ARE FOR BIDDING PURPOSES ONLY. DO NOT USE FOR CONSTRUCTION.

RESTAURANT #CH1679
PROTOTYPE 18.5FS

CHILI'S TOOELE
SWQ OF W 1000 NORTH & MAIN STREET
TOOELE, UT 84074

CLIENT: BRINKER RESTAURANT CORP. A VIRGINIA CORPORATION

DATE	DESCRIPTION
6/27/2024	ISSUE FOR PERMIT
9/23/2024	ISSUE FOR BID

	DATE	DESCRIPTION
1	09.20.24	CITY COMMENTS

PROJECT NUMBER:
CHI24007

SHEET TITLE:
FOUNDATION DETAILS

SHEET NUMBER:
S102

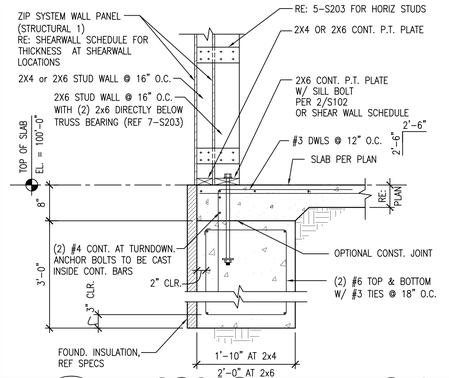

1 EXTERIOR GRADE BEAM FOOTING AT FUR OUT 3/4" = 1'-0" **1**

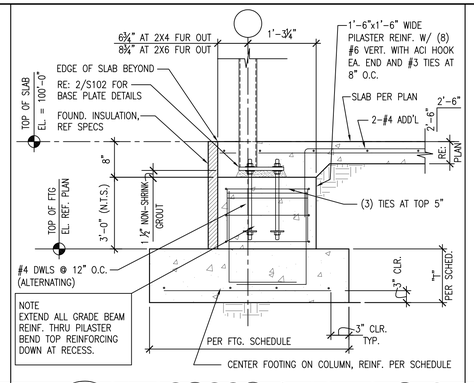

1 TUBE COLUMN PILASTER AT FUR OUT DETAIL 3/4" = 1'-0" **2**

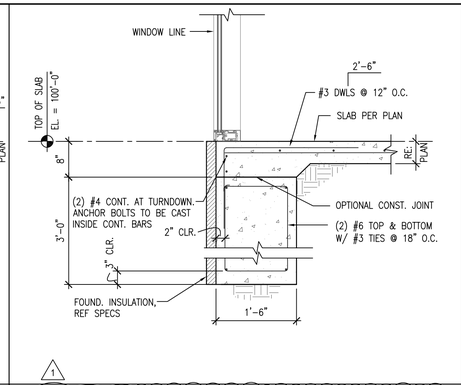

1 GRADE BEAM FOOTING AT STOREFRONT WINDOW 3/4" = 1'-0" **3**

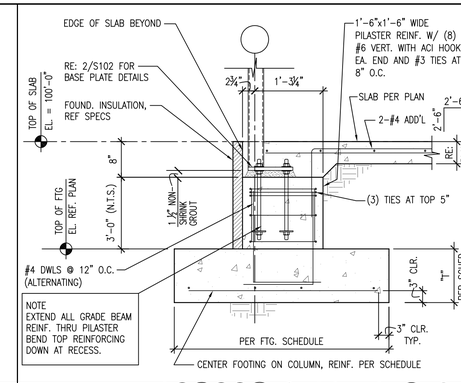

1 TUBE COLUMN PILASTER DETAIL 3/4" = 1'-0" **4**

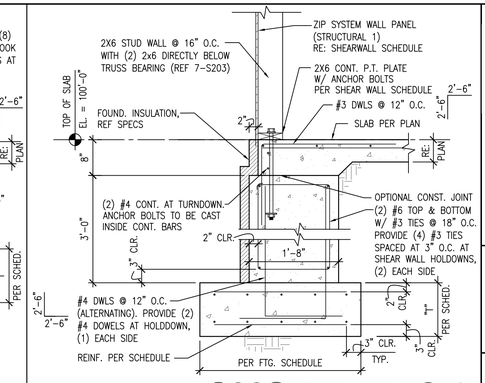

1 SHEARWALL FOOTING DETAIL 3/4" = 1'-0" **5**

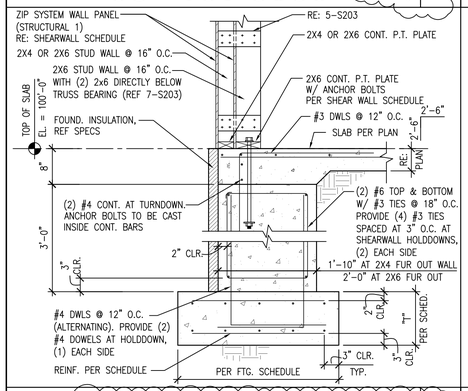

1 SHEARWALL FOOTING DETAIL AT FUR OUT 3/4" = 1'-0" **6**

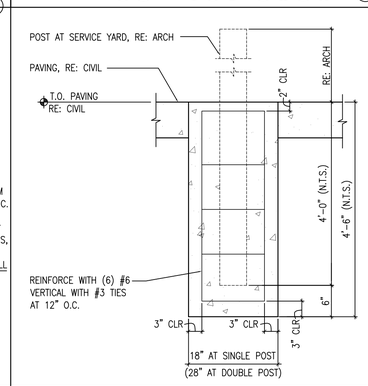

SERVICE YARD GATE POST FOUNDATION DETAIL 1 1/2" = 1'-0" **7**

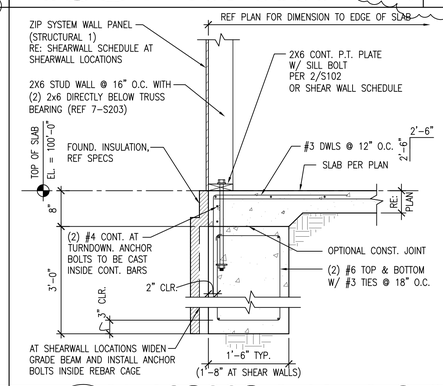

1 TYPICAL EXTERIOR GRADE BEAM FOOTING 3/4" = 1'-0" **8**

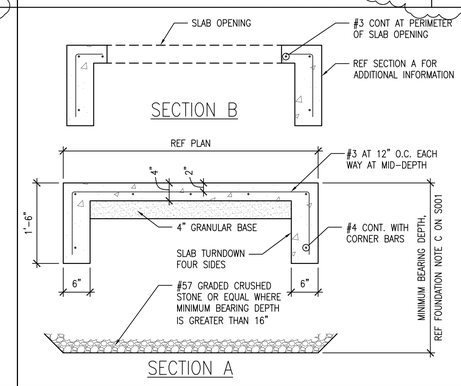

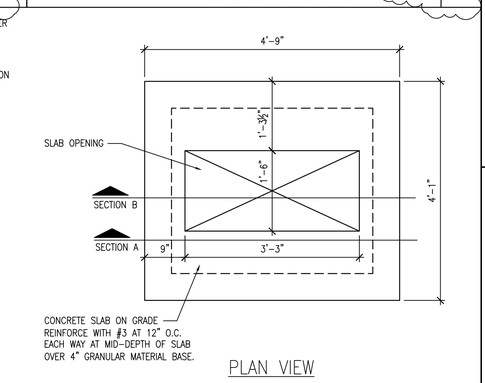

SLAB AT MDP 3/4" = 1'-0" **9**

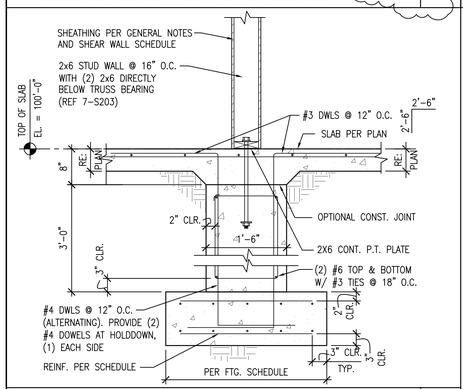

INTERIOR SHEAR WALL FOOTING 3/4"=1'-0" **10**

STRUCTURAL ENGINEER:

wallace design collective

wallace design collective, pc
structural · civil · landscape · survey
123 north martin luther king boulevard
tulsa, oklahoma 74103
918.584.5858 · 800.364.5858

CORPORATE:
BRINKER RESTAURANT CORPORATION, A VIRGINIA CORPORATION
3000 OLYMPUS BLVD.
DALLAS, TEXAS 75019
972.980.9917
www.brinker.com

09/23/2024

ISSUE FOR BID

THESE DOCUMENTS ARE FOR BIDDING PURPOSES ONLY. DO NOT USE FOR CONSTRUCTION.

RESTAURANT #CH1679
PROTOTYPE 18.5FS

CHILI'S TOOELE

SWQ OF W 1000 NORTH & MAIN STREET
TOOELE, UT 84074

CLIENT: BRINKER RESTAURANT CORP. A VIRGINIA CORPORATION

DATE	DESCRIPTION
6/27/2024	ISSUE FOR PERMIT
9/23/2024	ISSUE FOR BID

	DATE	DESCRIPTION
1	09.20.24	CITY COMMENTS

PROJECT NUMBER:
CHI24007

SHEET TITLE:
FOUNDATION DETAILS

SHEET NUMBER:
S103

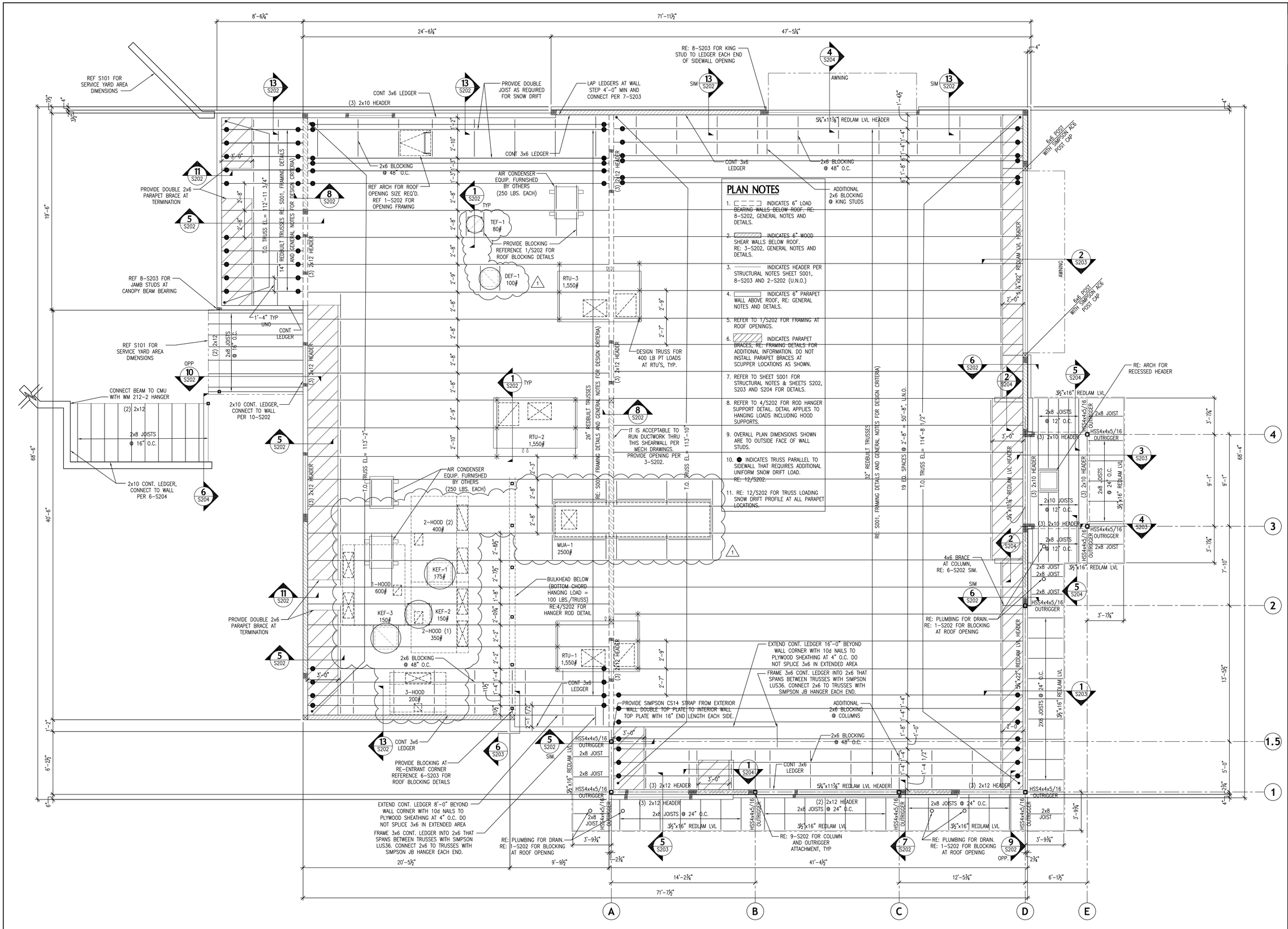

PLAN NOTES

1. INDICATES 6" LOAD BEARING WALLS BELOW ROOF. RE: 8-S202, GENERAL NOTES AND DETAILS.
2. INDICATES 6" WOOD SHEAR WALLS BELOW ROOF. RE: 3-S202, GENERAL NOTES AND DETAILS.
3. INDICATES HEADER PER STRUCTURAL NOTES SHEET S001, 8-S203 AND 2-S202 (U.N.O.)
4. INDICATES 6" PARAPET WALL ABOVE ROOF, RE: GENERAL NOTES AND DETAILS.
5. REFER TO 1/S202 FOR FRAMING AT ROOF OPENINGS.
6. INDICATES PARAPET BRACES, RE: FRAMING DETAILS FOR ADDITIONAL INFORMATION. DO NOT INSTALL PARAPET BRACES AT SCUPPER LOCATIONS AS SHOWN.
7. REFER TO SHEET S001 FOR STRUCTURAL NOTES & SHEETS S202, S203 AND S204 FOR DETAILS.
8. REFER TO 4/S202 FOR ROD HANGER SUPPORT DETAIL. DETAIL APPLIES TO HANGING LOADS INCLUDING HOOD SUPPORTS.
9. OVERALL PLAN DIMENSIONS SHOWN ARE TO OUTSIDE FACE OF WALL STUDS.
10. ● INDICATES TRUSS PARALLEL TO SIDEWALL THAT REQUIRES ADDITIONAL UNIFORM SNOW DRIFT LOAD. RE: 12/S202.
11. RE: 12/S202 FOR TRUSS LOADING SNOW DRIFT PROFILE AT ALL PARAPET LOCATIONS.

ROOF FRAMING PLAN
1/4"=1'-0"

1

STRUCTURAL ENGINEER:
wallace design collective
wallace design collective, pc
structural civil landscape survey
139 north martin luther king jr boulevard
tulsa, oklahoma 74103
918.584.5858 f 800.364.5858

CORPORATE:
BRINKER RESTAURANT CORPORATION, A VIRGINIA CORPORATION
3000 OLYMPUS BLVD.
DALLAS, TEXAS 75019
972.980.9917
www.brinker.com

09/23/2024
ISSUE FOR BID
THESE DOCUMENTS ARE FOR BIDDING PURPOSES ONLY. DO NOT USE FOR CONSTRUCTION.

RESTAURANT #CH1679
PROTOTYPE 18.5FS

CHILI'S TOOELE

SWQ OF W 1000 NORTH & MAIN STREET
TOOELE, UT 84074

CLIENT: BRINKER RESTAURANT, CORP. A VIRGINIA CORPORATION

DATE	DESCRIPTION
6/27/2024	ISSUE FOR PERMIT
9/23/2024	ISSUE FOR BID

	DATE	DESCRIPTION
1	09.20.24	CITY COMMENTS

PROJECT NUMBER:
CHI24007

SHEET TITLE:
ROOF FRAMING PLAN

SHEET NUMBER:
S201

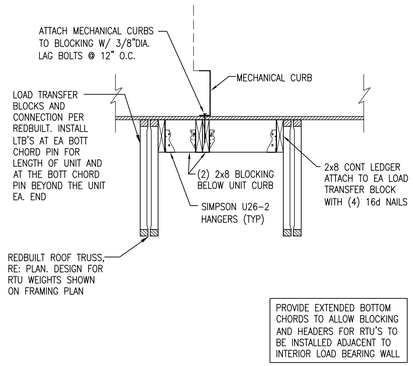

TYPICAL ROOF OPENING AND BLOCKING DETAIL 1
3/4" = 1'-0"

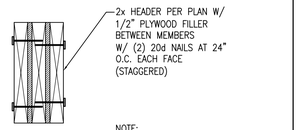

TYPICAL HEADER DETAIL 2
1 1/2 = 1'-0"

NOTES:
1. REFER TO TYPICAL SHEARWALL ELEVATION.
2. ALL PANEL EDGES SHALL BE BACKED WITH 2 INCH NOMINAL OR WIDER FRAMING.
3. PANELS INSTALLED ON 2X6 STUDS SPACED 16 INCHES ON CENTER WITH (2) 2x6 DIRECTLY BELOW TRUSS BEARING RE: 7-S203.
4. WHERE NAIL SPACING IS LESS THAN 6 INCHES ON CENTER ON EITHER SIDE, PANEL JOINTS SHALL BE OFFSET TO FALL ON DIFFERENT FRAMING MEMBERS OR FRAMING SHALL BE 3 INCHES NOMINAL OR THICKER AND NAILS ON EACH SIDE SHALL BE STAGGERED.
5. FRAMING AT ADJOINING PANEL EDGES SHALL BE 3 INCH NOMINAL OR WIDER AND NAILS SHALL BE STAGGERED WHERE 10d NAILS HAVING PENETRATION INTO FRAMING OF MORE THAN 1-5/8 INCHES ARE SPACED 3 INCHES OR LESS.
6. WHERE SILL PLATE ANCHOR BOLTS ARE MISSING OR MIS-LOCATED, USE SIMPSON 'SET-XP' EPOXY (ICC-ES-ESR-2508) OR EQUIVALENT WITH 12 INCHES MIN. EMBEDMENT WITH THREADED ROD OF THE SAME SIZE AND SPACING AS INDICATED.
7. IN ADDITION TO THE ON CENTER SPACING OF ANCHOR BOLTS, THERE SHALL BE AT LEAST (2) ANCHOR BOLTS PER PIECE OF SILL PLATE WITH A MINIMUM OF (1) ANCHOR BOLT LOCATED NOT GREATER THAN 9 INCHES, AND LESS THAN 4-1/2 INCHES OF EACH PIECE END.
8. MINIMUM CONCRETE SIDE EDGE DISTANCE FOR BOTH SILL PLATE AND HOLDDOWN ANCHOR BOLTS IS 2 INCHES AND MINIMUM CONCRETE END EDGE DISTANCE FOR HOLDDOWN ANCHOR BOLTS IS 12 INCHES.
9. HOLDDOWNS SHALL BE INSTALLED PER MANUFACTURER INSTALLATION REQUIREMENTS.
10. HOLES ARE NOT ALLOWED IN SHEAR WALLS, UNLESS APPROVED BY THE STRUCTURAL ENGINEER PRIOR TO CONSTRUCTION. IF A HOLE IS APPROVED, IT IS TO BE ENTIRELY WITHIN ONE SHEET. PROVIDE BLOCKING AND EDGE NAILING AROUND OPENING.
11. MIN. WIDTH OF SHEATHING SHALL BE 2 FT.
12. NAILS SHALL BE COMMON NAILS.

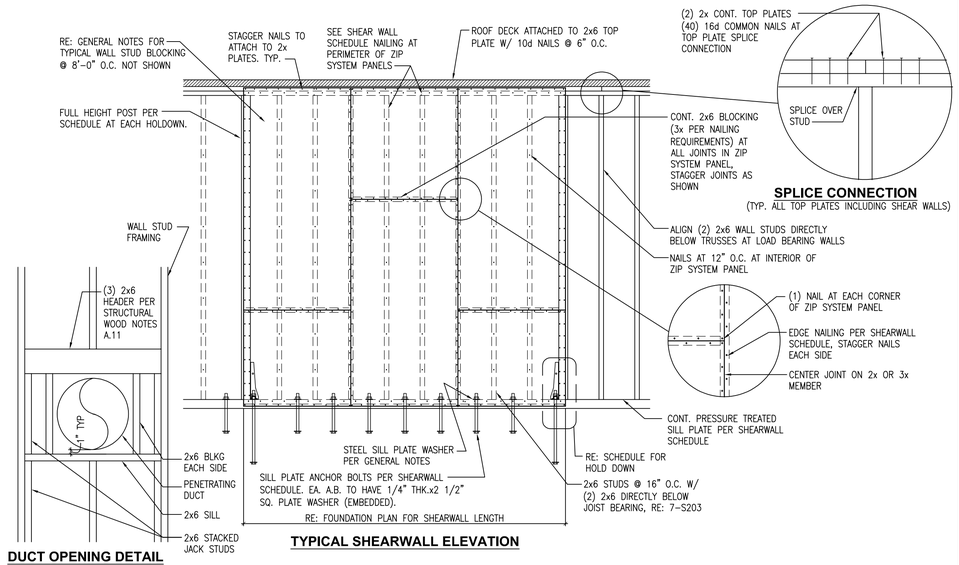

WOOD SHEARWALL SCHEDULE

MARK	PANEL GRADE	MIN. NOMINAL PANEL THICKNESS (IN.)	MIN. NAIL PENETRATION IN FRAMING (IN.)	NAIL SIZE	NAIL SPACING (IN.)		SILL PLATE ANCHOR BOLTS	END POSTS	HOLDDOWNS AT THE ENDS			SHEAR WALL CAPACITY (PLF)
					PANEL EDGES	INTERMEDIATE FRAMING			TYPE	ANCHOR BOLT	ANCHOR BOLT EMBEDMENT (IN.)	
SW1	"STRUCTURAL 1" ZIP SYSTEM PANEL SHEATHING AT EXTERIOR WALLS AND PLYWOOD AT INTERIOR WALLS	5/8	1 1/2	10d	4	12	2x SILL 3/4" DIA.x1'-0" EMBED THREADED RODS @ 16" O.C.	(4) – 2X6 (RE: 7-S203)	SIMPSON HDU14-SDS2.5 OR EQUIVALENT	1" DIA. THREADED ROD WITH NUT/ WASHER	26	715
SW2	"STRUCTURAL 1" ZIP SYSTEM PANEL SHEATHING AT EXTERIOR WALLS AND PLYWOOD ON DINING SIDE AT INTERIOR WALLS	5/8	1 1/2	10d	4	12	2x SILL 3/4" DIA.x1'-0" EMBED THREADED RODS @ 16" O.C.	6X6	SIMPSON HDU14-SDS2.5 OR EQUIVALENT	1" DIA. THREADED ROD WITH NUT/ WASHER	26	715

SHEARWALL ATTACHMENT AND SCHEDULE 3
N.T.S.

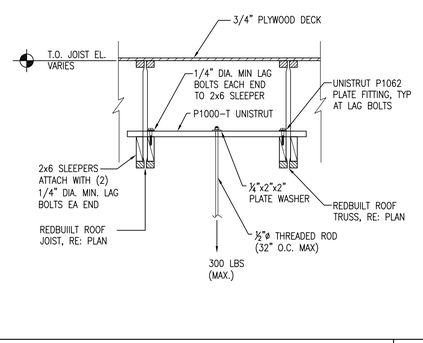

TYPICAL HANGER ROD DETAIL 4
3/4"=1'-0"

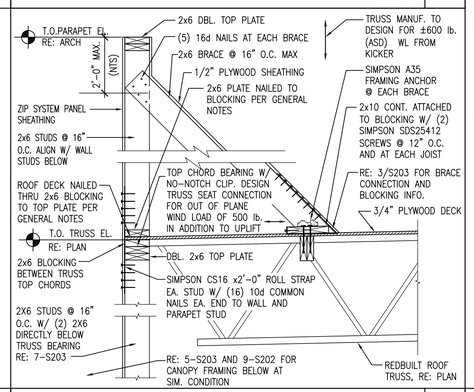

REAR WALL DETAIL 5
3/4"=1'-0"

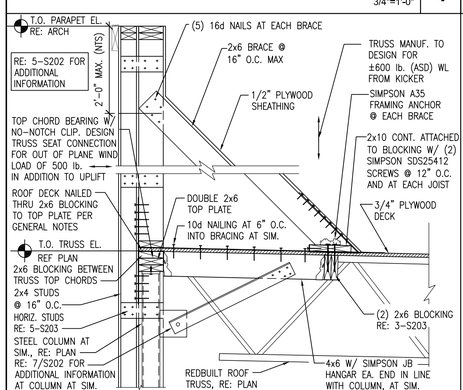

FRONT WALL DETAIL 6
3/4"=1'-0"

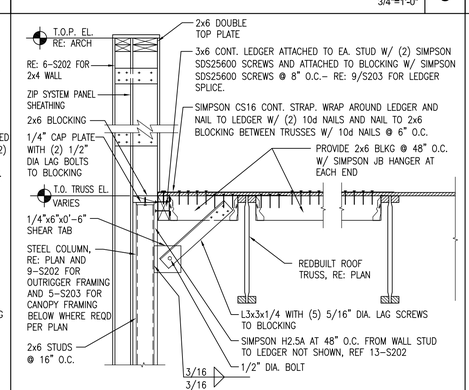

SIDE WALL DETAIL 7
3/4"=1'-0"

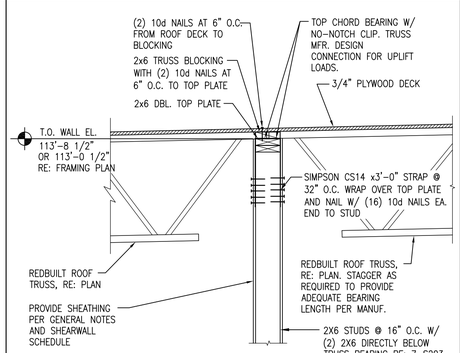

ROOF TRUSS AT INTERIOR BEARING WALL DETAIL 8
3/4"=1'-0"

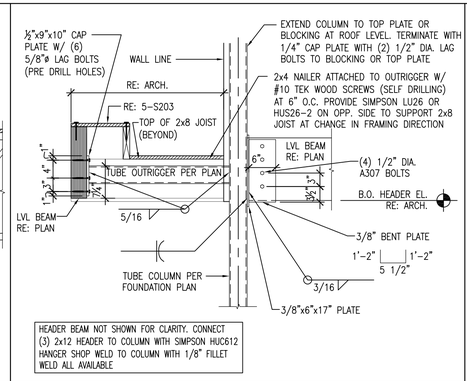

HSS COLUMN DETAIL 9
3/4"=1'-0"

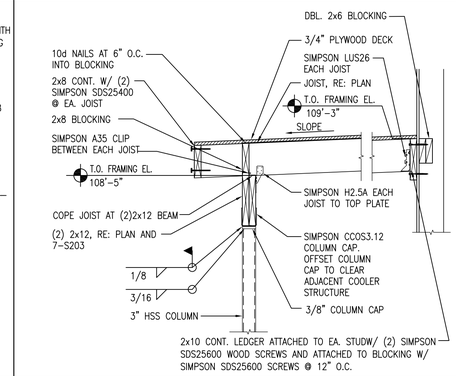

CANOPY SECTION 10
3/4"=1'-0"

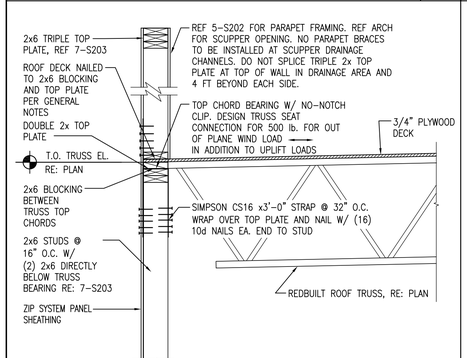

REAR WALL
3/4 = 1'-0"

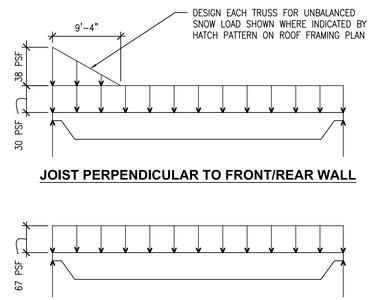

SNOW DRIFT PROFILE AND LOADING 12
N.T.S.

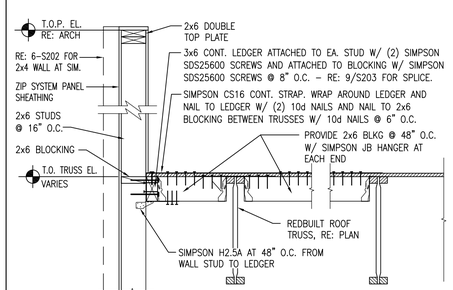

WALL SECTION 13
3/4"=1'-0"

STRUCTURAL ENGINEER:
wallace design collective
wallace design collective, pc
structural · civil · landscape · survey
125 north main sutherlin st boulevard
tulsa oklahoma 74103
918.584.1858 · 800.364.5808

CORPORATE:
BRINKER RESTAURANT CORPORATION, A VIRGINIA CORPORATION
3000 OLYMPUS BLVD.
DALLAS, TEXAS 75019
972.980.9917
www.brinker.com

09/23/2024
ISSUE FOR BID
THESE DOCUMENTS ARE FOR BIDDING PURPOSES ONLY. DO NOT USE FOR CONSTRUCTION.

RESTAURANT #CH1679
PROTOTYPE 18.5FS

CHILI'S TOOELE
SWQ OF W 1000 NORTH & MAIN STREET
TOOELE, UT 84074

CLIENT: BRINKER RESTAURANT CORP. A VIRGINIA CORPORATION

DATE	DESCRIPTION
6/27/2024	ISSUE FOR PERMIT
9/23/2024	ISSUE FOR BID

△	DATE	DESCRIPTION

PROJECT NUMBER:
CHI24007

SHEET TITLE:
ROOF FRAMING DETAILS

SHEET NUMBER:
S202

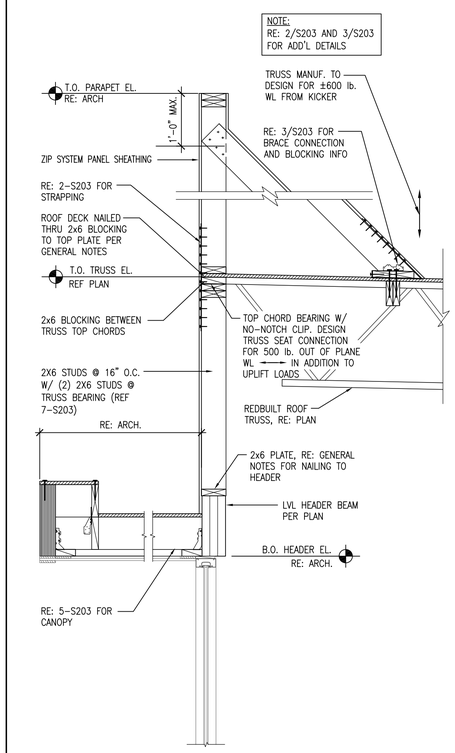

FRONT WALL DETAIL 1
3/4" = 1'-0"

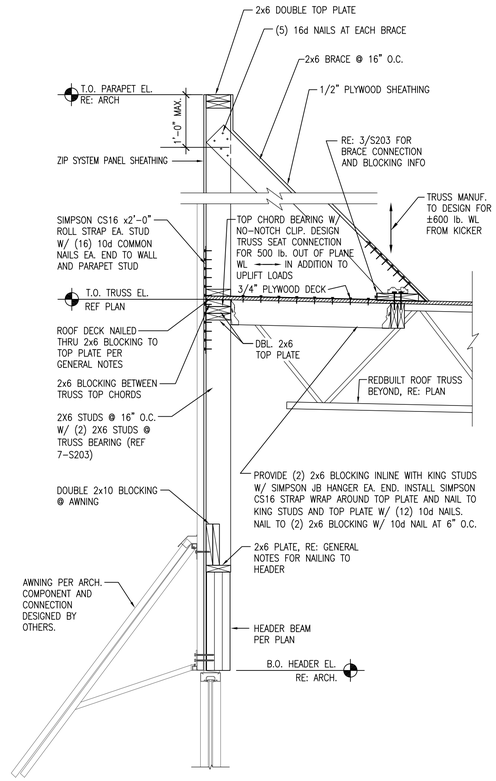

WALL AT WINDOW DETAIL 2
3/4 = 1'-0"

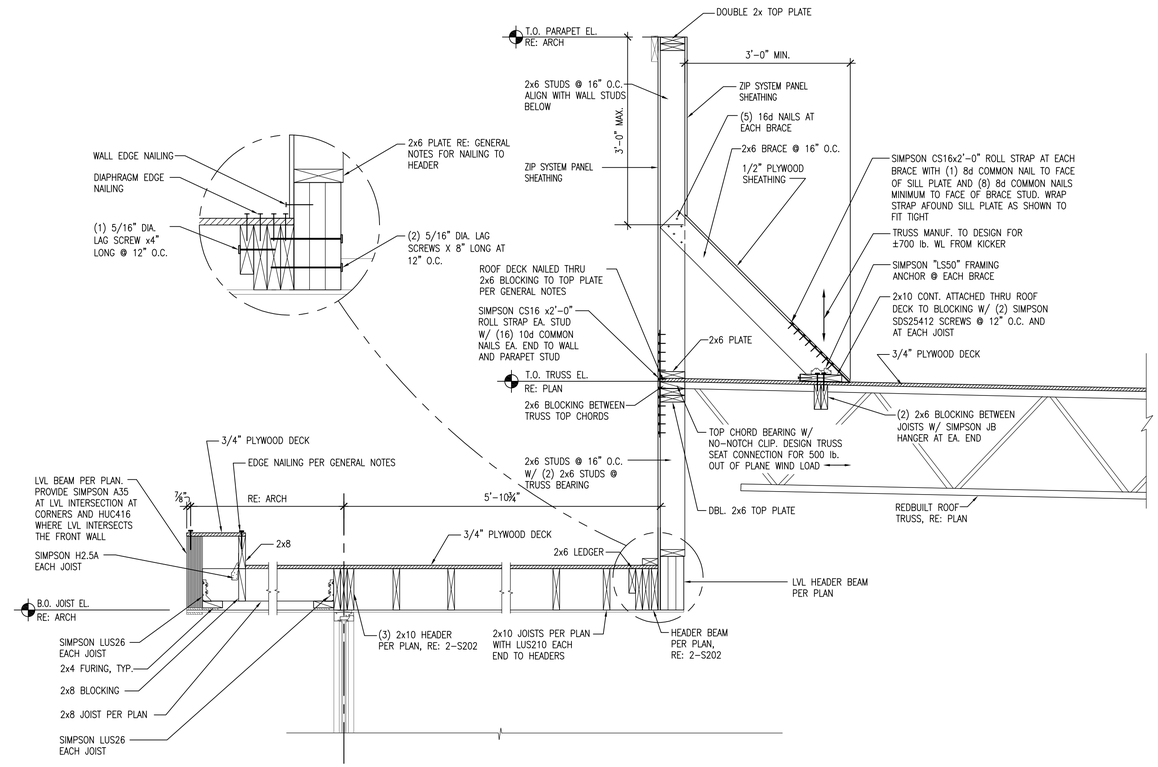

FRONT ENTRY TOWER AT VESTIBULE DETAIL 3
1 1/2 = 1'-0"

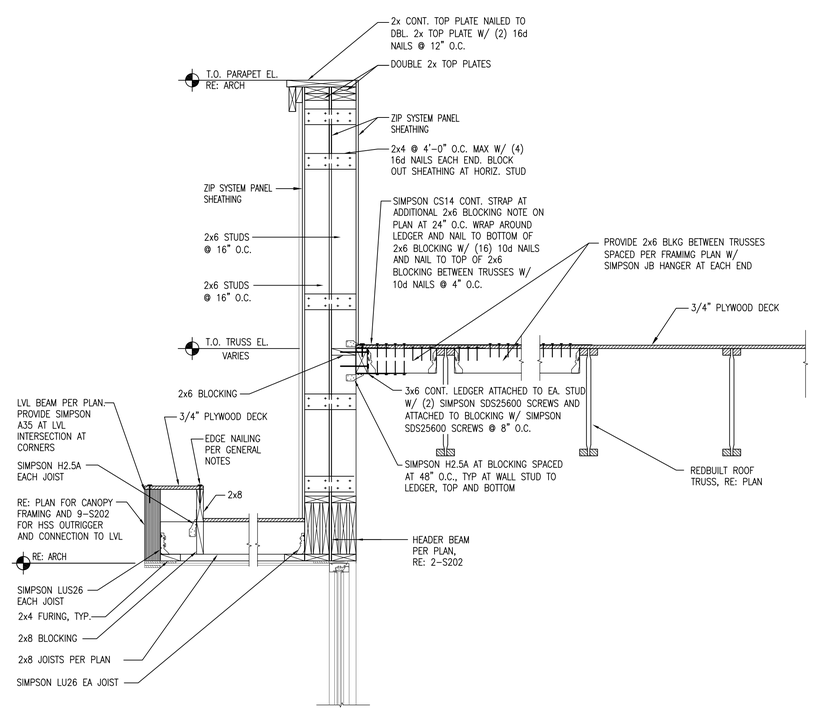

SIDEWALL CANOPY DETAIL 5
3/4" = 1'-0"

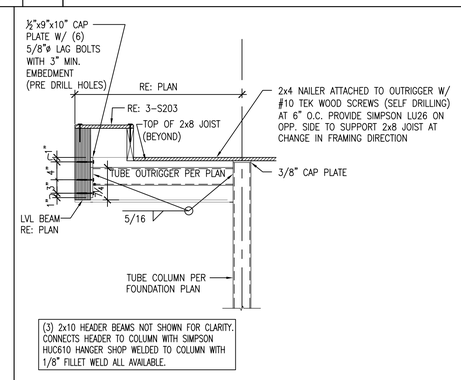

ENTRY CANOPY OUTRIGGER DETAIL 4
3/4" = 1'-0"

LEDGER SPLICE 9
1 1/2 = 1'-0"

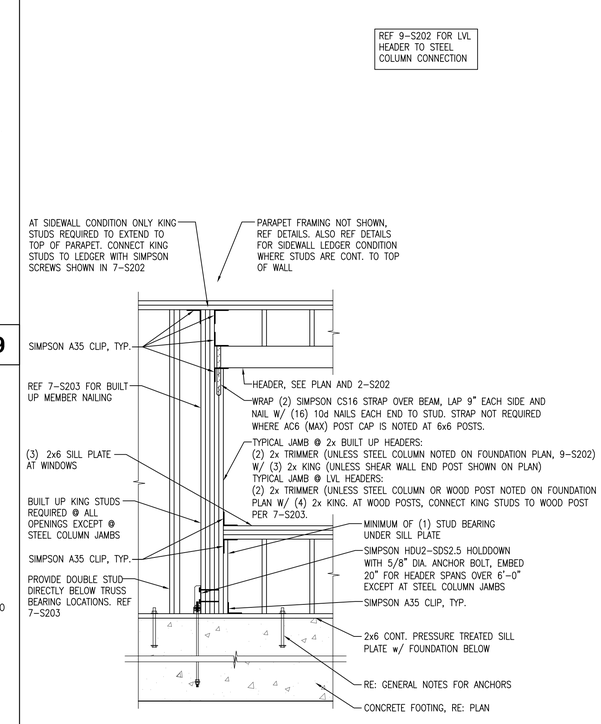

TYPICAL WALL OPENING ELEVATION 8
3/4" = 1'-0"

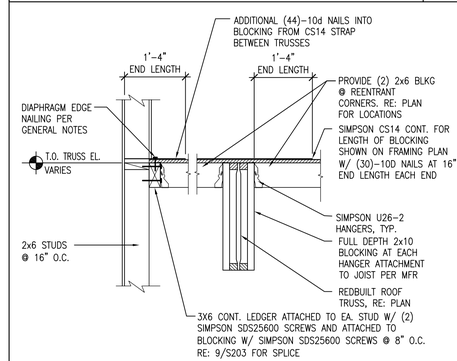

BLOCKING SPLICE AT RE-ENTRANT CORNER 6
3/4" = 1'-0"

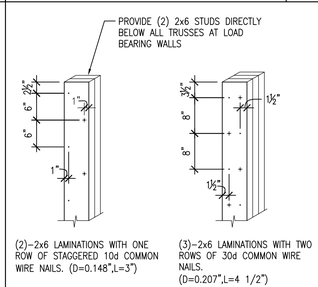

BUILT-UP MEMBER DETAIL 7
1 1/2 = 1'-0"

STRUCTURAL ENGINEER:

wallace design collective

wallace design collective, pc
structural · civil · landscape · survey
12944 tomahawk ridge lakeway boulevard
austin, oklahoma 78733
512.266.0808 · 800.366.5868

CORPORATE:
BRINKER RESTAURANT CORPORATION, A VIRGINIA CORPORATION
3000 OLYMPUS BLVD.
DALLAS, TEXAS 75019
972.980.9917
www.brinker.com

09/23/2024
ISSUE FOR BID
THESE DOCUMENTS ARE FOR BIDDING PURPOSES ONLY. DO NOT USE FOR CONSTRUCTION.

RESTAURANT #CH1679
PROTOTYPE 18.5FS

CHILI'S TOOELE
SWQ OF W 1000 NORTH & MAIN STREET
TOOELE, UT 84074

CLIENT: BRINKER RESTAURANT CORP. A VIRGINIA CORPORATION

chili's

DATE	DESCRIPTION
6/27/2024	ISSUE FOR PERMIT
9/23/2024	ISSUE FOR BID

⚠	DATE	DESCRIPTION

PROJECT NUMBER:
CHI24007

SHEET TITLE:
ROOF FRAMING DETAILS

SHEET NUMBER:
S203

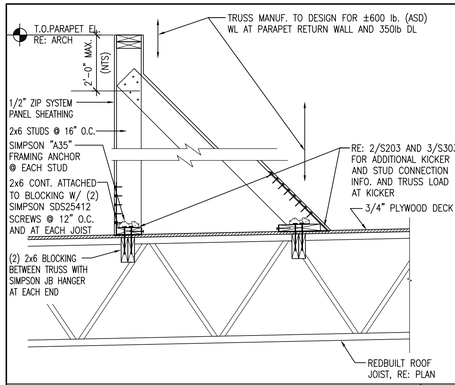

PARAPET RETURN WALL DETAIL 1
3/4"=1'-0"

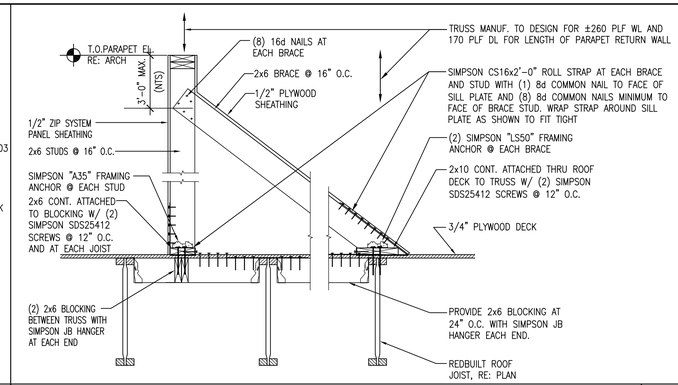

PARAPET RETURN WALL DETAIL 2
3/4"=1'-0"

NOT USED 3
3/4"=1'-0"

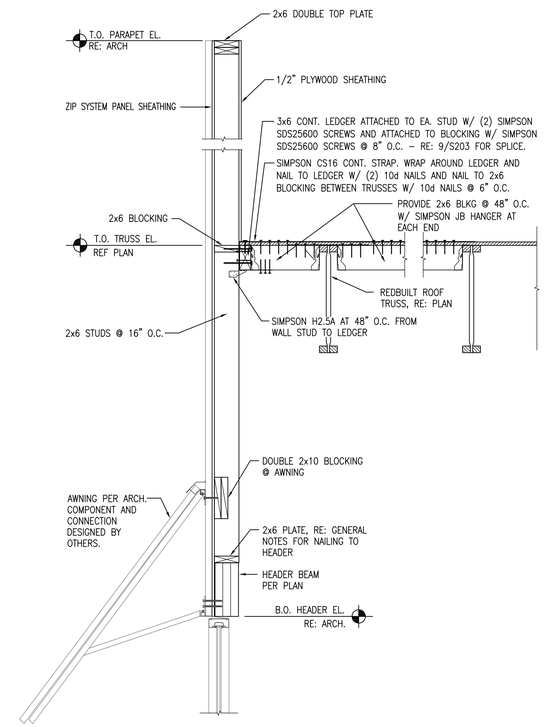

SIDEWALL AT AWNING DETAIL 4
3/4 = 1'-0"

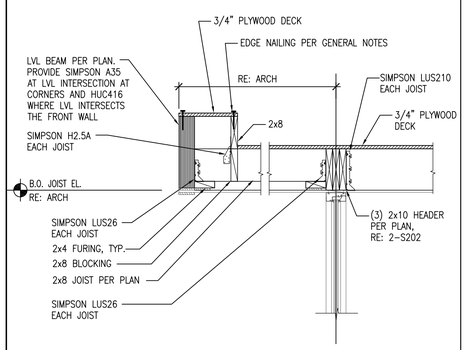

ENTRY CANOPY SIDE SECTION 5
3/4"=1'-0"

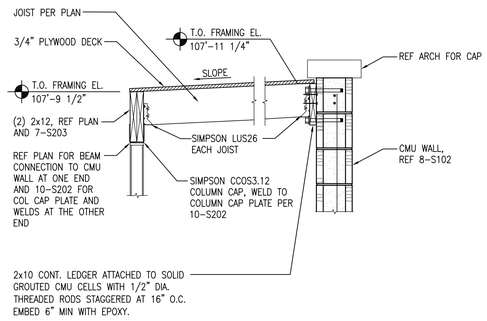

CMU ENCLOSURE ROOF 6
3/4"=1'-0"

STRUCTURAL ENGINEER:

wallace design collective

wallace design collective, pc
structural · civil · landscape · survey
125 north north lutheringt boulevard
tulsa oklahoma 74103
918.584.8168 · 800.364.5808

CORPORATE:
BRINKER RESTAURANT CORPORATION, A VIRGINIA CORPORATION
3000 OLYMPUS BLVD.
DALLAS, TEXAS 75019
972.980.9917
www.brinker.com

09/23/2024
ISSUE FOR BID
THESE DOCUMENTS ARE FOR BIDDING PURPOSES ONLY. DO NOT USE FOR CONSTRUCTION.

RESTAURANT #CH1679
PROTOTYPE 18.5FS

CHILI'S TOOELE
SWQ OF W 1000 NORTH & MAIN STREET
TOOELE, UT 84074

CLIENT: BRINKER RESTAURANT CORP. A VIRGINIA CORPORATION

DATE	DESCRIPTION
6/27/2024	ISSUE FOR PERMIT
9/23/2024	ISSUE FOR BID

△	DATE	DESCRIPTION

PROJECT NUMBER:
CHI24007

SHEET TITLE:
ROOF FRAMING DETAILS

SHEET NUMBER:
S204

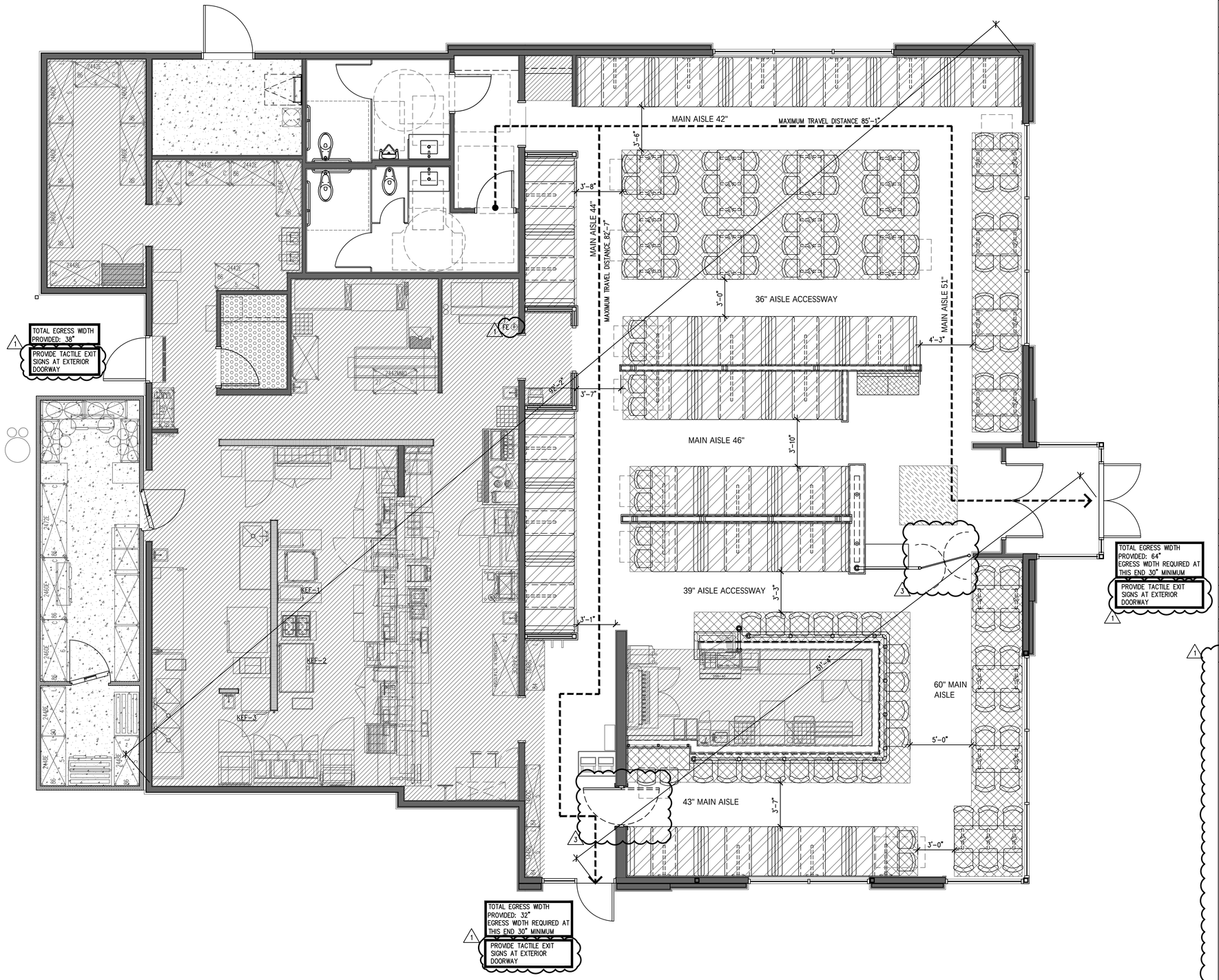

OCCUPANCY LOAD / EGRESS PLAN
1/4"=1'-0"

OCCUPANCY

LEGEND	AREA	CODE REFERENCE	CALCULATED QUANTITY	ACTUAL QUANTITY OF SEATS/EMP.	HIGHER AMOUNT OF CALCULATION OR ACTUAL
ASSEMBLY WITHOUT FIXED SEATS	632 S.F.	15 S.F./PERSON	43	104	104
ASSEMBLY WITH FIXED SEATS	204 L.F.	1 PER 24" OF BOOTH	102	102	102
ASSEMBLY WITHOUT FIXED SEATS–WAITING	46 S.F.	7 S.F./PERSON	7	0	7
ASSEMBLY WITH FIXED SEATS–WAITING	5 L.F.	1 PER 18" OF BENCH	4	2	4
KITCHEN – COMMERCIAL	1526 S.F.	200 S.F./PERSON	8	18	18
MECHANICAL ROOM/ STORAGE	461 S.F.	300 S.F./PERSON	2	0	2
OFFICES	41 S.F.	150 S.F./PERSON	1	1	1
ACCESSORY USE (TOILETS, AISLES, ETC.)	–	EXCLUDED	0	0	0
TOTAL OCCUPANTS			167	227	238

SEATING CAPACITIES

TYPES	PARTIES	SEATS	% OF PARTIES
BAR DINING			
BAR STOOLS	0	18	0
BAR ADA	0	2	0
2 TOP FLEX	0	0	0.0
4 TOP FLEX	3	12	6.8
6 TOP FLEX	1	6	2.3
4 TOP BOOTH	8	32	18.2
BAR TOTAL	12	70	27.3%
MAIN DINING			
4 TOP FLEX	8	32	18.2
6 TOP FLEX	4	24	9.1
4 TOP BOOTH	20	80	45.5
DINING TOTAL	32	136	72.7
GRAND TOTAL	44	206	100.0%

PLUMBING FIXTURE REQUIREMENTS

USE TYPE: A–2
OCC. LOAD: 238/2=119
REQUIRED FACILITIES:

	WATER COSETS	LAVATORIES	URINALS
MEN	1: 75 119/75=1.59 | 2 REQ.	1: 200 119/200=0.6 | 1 REQ.	NO MORE THAN 60%
WOMEN	1: 75 119/75=1.59 | 2 REQ.	1: 200 119/200=0.6 | 1 REQ.	–

PROVIDED FACILITES

	WATER COSETS	LAVATORIES	URINALS
MEN	1: 75 1	1: 200 1	1
WOMEN	1: 75 2	1: 200 1	–

EGRESS NOTES

BUILDING DIAGONAL:	APPROX. 93 FT.
DISTANCE BETWEEN (> THAN 1/3, SPRINKLERED)	APPROX. 43 FT (88/3=29)
MINIMUM 2 EXITS REQUIRED	2 PROVIDED IN DINING 3 PROVIDED FOR BUILDING
MAXIMUM TRAVEL DISTANCE: (ALLOWABLE: 250 FT, SPRINKLERED)	APPROXIMATELY 86 FT., WOMEN'S
TOTAL EGRESS WIDTH REQUIRED: 60"	
TOTAL EGRESS WIDTH PROVIDED: 134"	

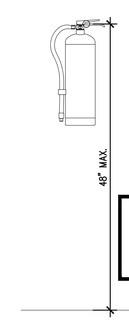

G.C. TO PROVIDE (1) 2A:10BC FIRE EXTINGUISHER PER 3000 SQUARE FEET WITH A MAXIMUM TRAVEL DISTANCE OF 75 FEET. WALL MOUNT IN VISIBLE AREA WITH NO OBSTRUCTIONS.

FIRE EXTINGUISHER PLACEMENT DETAIL
1/4"=1'-0"
2

ARCHITECT:
DAVID SCOTT WINDLE, AIA
6201 CAMPUS CIRCLE DRIVE E.
IRVING, TEXAS 75038
TEL: 972.870.1288
WWW.IDSTUDIO4.COM
E-MAIL scottw@idstudio4.com

CORPORATE:
BRINKER RESTAURANT CORPORATION, A VIRGINIA CORPORATION
3000 OLYMPUS BLVD.
DALLAS, TEXAS 75019
972.980.9917
www.brinker.com

09/23/2024
ISSUE FOR BID
THESE DOCUMENTS ARE FOR BIDDING PURPOSES ONLY. DO NOT USE FOR CONSTRUCTION.

RESTAURANT #CH1679
PROTOTYPE 18.5FS

CHILI'S TOOELE
951 N MAIN STREET
TOOELE, UT 84074

CLIENT: BRINKER RESTAURANT CORP. A VIRGINIA CORPORATION

	DATE	DESCRIPTION
	9/27/2024	ISSUE FOR PERMIT
	9/23/2024	ISSUE FOR BID

	DATE	DESCRIPTION
1	08.07.2024	CITY COMMENTS
2	09.10.2024	CITY COMMENTS

PROJECT NUMBER:
CHI24007

SHEET TITLE:
OCCUPANCY LOAD/ EGRESS PLAN

SHEET NUMBER:
A001

GENERAL NOTE

ALL WOOD TRIM HARDIBOARD FINISH WOOD TO BE BACK PRIMED PER SPECIFICATIONS

WS-1 FORMULA (SHERWIN WILLIAMS)

PRODUCT	DESCRIPTION				
S64T50	SHWD WIPE STN CLR BS (GALLON)				
	CUSTOM: STAIN MATCH				
	BAC BLEND-A-COLOR	OZ	32	64	128
	B1 BLACK	–	19	1	1
	N1 RAW UMBER	–	48	–	1
	R2 MAROON	–	25	1	–
	Y3 DEEP GOLD	2	20	–	–
	G2 NEW GREEN	–	28	–	–

METAL FINISHES (SHERWIN WILLIAMS)

ALL BLACK IRON PIPE – SHERWIN WILLIAMS ARMORSEAL 8100 STAIN FINISH

FINISH SCHEDULE LEGEND

TAG	ITEM	MANUFACTURER/SUPPLIER	MATERIAL SPECIFICATION	APPLICATION	LOCATION	REMARKS	PURCHASED BY:	INSTALLED BY:
PAINT								
EP-1	ANONYMOUS	SHERWIN WILLIAMS	COLOR: SW7046 "ANONYMOUS" – EXTERIOR SATIN	PAINTS AND GLAZING LIQUIDS ARE TO BE PURCHASED THROUGH A BRINKER INTERNATIONAL ACCOUNT WITH SHERWIN WILLIAMS. IDENTIFY PRODUCT BY NAME (I.E. "CHILI'S FUTURE BAR REIMAGE") CONTACT; MIKE KONCILJA, PHONE: 602.653.9577, EMAIL: MIKE.K@SHERWIN.COM, STOREFRONT DOORS ARE PREFINISHED. DO NOT PAINT IN THE FIELD.	METAL CAP FLASHING (SERVICE YARD), GAS LINES, OVERFLOW SCUPPER; DOOR AND FRAMES (SEMI-GLOSS), EXTERIOR EIFS.	RE: EXTERIOR ELEVATIONS	GENERAL CONTRACTOR	GENERAL CONTRACTOR
EP-2	CANYON CLAY	SHERWIN WILLIAMS	COLOR: SW6054 "CANYON CLAY" – EXTERIOR SATIN		WATERTABLE	RE: EXTERIOR ELEVATIONS	GENERAL CONTRACTOR	GENERAL CONTRACTOR
EP-4	TRICORN BLACK	SHERWIN WILLIAMS	COLOR: SW6258 "TRICORN BLACK" – EXTERIOR SATIN		EXTERIOR STANDING SEAM METAL, METAL CAP	RE: EXTERIOR ELEVATIONS	GENERAL CONTRACTOR	GENERAL CONTRACTOR
EP-5	SALUTE RED	ARCONIC	COLOR: SL4A1183 "SALUTE RED"-FLUROPON PREMIERE CLEARCOAT 390X320	CONTACT: CHERYL WILKERSON, (317)-771-9263, CHERYL.WILKERSON@ARCONIC.COM	EXTERIOR DOOR AT MAIN ENTRY AND TO-GO AND FRAME AND INTERIOR VESTIBULE DOORS (PREFINISHED DOORS)	RE: EXTERIOR ELEVATIONS	GENERAL CONTRACTOR	GENERAL CONTRACTOR
P-1	WARM STONE	SHERWIN WILLIAMS	SW7032 EGGSHELL	SHERWIN WILLIAMS CONTACT: MICHAEL KONCILJA, PHONE: 602.653.9511, EMAIL: MIKE.K@SHERWIN.COM RE: SPECIFICATIONS FOR MORE INFORMATION.	WOOD TRIM IN DINING	RE: REFLECTED CEILING PLAN	GENERAL CONTRACTOR	GENERAL CONTRACTOR
P-2	URBANE BRONZE	SHERWIN WILLIAMS	SW7048 EGGSHELL		TO GO, BAR DINING, DINING, SERVICE, HIGH CEILING AS NOTED, TRUSSES	RE: INTERIOR ELEVATIONS	GENERAL CONTRACTOR	GENERAL CONTRACTOR
P-4	TRICORN BLACK	SHERWIN WILLIAMS	SW6258 EGGSHELL		SOFFIT BAND IN DINING	RE: RESTROOM ELEVATIONS	GENERAL CONTRACTOR	GENERAL CONTRACTOR
P-5	REQUISITE GREY	SHERWIN WILLIAMS	SW7023 EGGSHELL		TO GO VESTIBULE, BAR, OFFICE DOOR	RE: INTERIOR ELEVATIONS	GENERAL CONTRACTOR	GENERAL CONTRACTOR
P-6	SALUTE	SHERWIN WILLIAMS	SW7582 HIGH GLOSS		COLUMNS AT COMMUNITY TABLE, CEILING AT HOSTESS STAND	RE: INTERIOR ELEVATIONS, REFLECTED CEILING PLAN	GENERAL CONTRACTOR	GENERAL CONTRACTOR
P-7	CHATROOM	SHERWIN WILLIAMS	SW6171 EGGSHELL		RESTROOM WALLS AND CEILING	RE: INTERIOR ELEVATIONS	GENERAL CONTRACTOR	GENERAL CONTRACTOR
EXTERIOR FINISH								
EF-1	EIFS	PAREX	PRODUCT: WATERMASTER LCR – GX, FINISH: SAND FINE	CONTACT: RANDY CAMPBELL, (714)-778-2266 x 3952, RANDY.CAMPBELL@PAREXUSA.COM	EXTERIOR FACADE	RE: EXTERIOR ELEVATIONS	GENERAL CONTRACTOR	GENERAL CONTRACTOR
STONE								
ET-1	CEDAR ROUGH CUT WOODSTONE	CORONADO STONE PRODUCTS	PRODUCT: WOODSTONE SERIES, COLOR: CEDAR ROUGH CUT WOODSTONE, 6" x 36" DRY STACKED; 1/3 RUNNING BOND. MINIMUM STONE PIECE SIZE THAT SHOULD BE USED IS 6".	CONTACT: TONYA OWEN – 214.809.5277	EXTERIOR FACADE	RE: EXTERIOR ELEVATIONS	GENERAL CONTRACTOR	GENERAL CONTRACTOR
BRICK								
BR-1	BURGUNDY	BLACKSON BRICK CO.	THIN BRICK, CLOUD CERAMICS BURGUNDY, GROUT: M-1 STYLE, WIDTH: 3/8", FIELD: NORMAN, CORNER: BC 2-1/4", SIZE: 7-5/8"x2-1/4", CORNER: 3-5/8"x7-5/8"x2-1/4", TILE PATTERN: HORIZONTAL STACK BOND, MODULAR SMOOTH	CONTACT: BRAE BARTON – 817.874.3194, WWW.BLACKSONBRICK.COM; BRAE@BLACKSONBRICK.COM	EXTERIOR FACADE/ ENTRY	RE: EXTERIOR ELEVATIONS/ INTERIOR ELEVATIONS	GENERAL CONTRACTOR	GENERAL CONTRACTOR
MORTAR								
M-1	IRON BLACK	SPEC MIX TYPE S	MORTAR COLOR: #94X IRON BLACK	CONTACT: BRAE BARTON – 817.874.3194, WWW.BLACKSONBRICK.COM; BRAE@BLACKSONBRICK.COM	EXTERIOR FACADE/ ENTRY	RE: EXTERIOR ELEVATIONS/ INTERIOR ELEVATIONS	GENERAL CONTRACTOR	GENERAL CONTRACTOR
METAL TRIM								
EMT-1	EDGE TRIM	EXCEPTIONAL METALS	2-PIECE COMPRESSION ALUMINIUM PARAPET EDGE TRIM, COLOR: COAL BLACK	WWW.EXCEPTIONALMETALS.COM, 800.248.0280	EXTERIOR PARAPET CAP	RE: EXTERIOR ELEVATIONS	GENERAL CONTRACTOR	GENERAL CONTRACTOR
EMT-2	METAL REVEAL	FRY REGLET	PCS-75-150 2-PC, FINISH: ALUMINIUM MILL FINISH	WWW.FRYREGLET.COM, 800.237.9773	EXTERIOR FACADE	RE: EXTERIOR ELEVATIONS	GENERAL CONTRACTOR	GENERAL CONTRACTOR
EMT-3	FASCIA COVER	EXCEPTIONAL METALS	COAL BLACK ALUMINUM METAL FASCIA WITH DRIP EDGE	WWW.EXCEPTIONALMETALS.COM, 800.248.0280	EXTERIOR CANOPY	RE: EXTERIOR ELEVATIONS	GENERAL CONTRACTOR	GENERAL CONTRACTOR
EMT-4	METAL REVEAL	FRY REGLET	PCS-75-75 2-PC, FINISH: ALUMINIUM MILL FINISH	WWW.FRYREGLET.COM, 800.237.9773	EXTERIOR FACADE	RE: EXTERIOR ELEVATIONS	GENERAL CONTRACTOR	GENERAL CONTRACTOR
SIDING								
SIDG-1	CEMENT LAP SIDING	JAMES HARDIE	HARDIEPLANK FIBER-CEMENT LAP SIDING, SIZE: 5/16"x7.25" (6" EXPOSURE)	TEXTURE: SELECT CEDARMILL	SERVICE YARD AND STORAGE	RE: SERVICE YARD PLAN AND DETAILS	GENERAL CONTRACTOR	GENERAL CONTRACTOR
SIDG-2	1" CEMENT SIDING TRIM BOARD	JAMES HARDIE	HARDIETRIM FIBER-CEMENT SIDING TRIM BOARD, SIZE: 1" THICK x WIDTH NOTED ON DRAWINGS.	TEXTURE: SMOOTH	SERVICE YARD AND STORAGE	RE: SERVICE YARD PLAN AND DETAILS	GENERAL CONTRACTOR	GENERAL CONTRACTOR
WOOD PANELING								
EWD-5	CUSTOM EXTERA CORE RED OAK VENEER PANEL	WESTWOOD MILLWORK, INC.	CUSTOM PANELING- 3/4"X4'X8' EXTERA WITH 1/16" VENEER. 1/4"X1/4" SQUARE GROOVE, 5-1/2" ON CENTER PAINTED BLACK. STAIN: MINWAX MWB-23 HARVEST GOLD, WATER BASED WOOD STAIN SEALER: 2 COATS, SEAL-ONCE POLY PREMIUM WOOD SEALER, CLEAR/SATIN, WATER BASED	CONTACT: BILL SLIGHT – 940.726.5016 X100, BSLIGHT@WESTWOODMILLWORK.COM	UNDERSIDE OF EXTERIOR CANOPY	RE: REFLECTED CEILING PLAN	GENERAL CONTRACTOR	GENERAL CONTRACTOR
ROOFING								
R-1	STANDING SEAM METAL	BERRIDGE MANUF., INC.	BATTEN SEAM PANEL, COLOR: MATTE BLACK	WWW.BERRIDGE.COM	FRONT FACADE OVER ENTRY	RE: EXTERIOR ELEVATIONS	GENERAL CONTRACTOR	GENERAL CONTRACTOR
R-2	SINGLE PLY MEMBRANE	DURO-LAST ROOFING, INC.	COLOR: MAIN ROOF – "WHITE', BACK OF PARAPETS 'CHARCOAL GRAY'	CONTACT: JIM MILLER – 800.248.0280, CORPORATEACCOUNTS@DURO-LAST.COM WWW.DURO-LAST.COM	ROOF	RE: ROOF PLAN	GENERAL CONTRACTOR	GENERAL CONTRACTOR
R-3	CORRUGATED METAL	LOCALLY SOURCED	COLOR: 'CHARCOAL GRAY'		SERVICE YARD – SECURITY CAGE ROOF	RE: ROOF PLAN	GENERAL CONTRACTOR	GENERAL CONTRACTOR
AWNING								
AW-1	STANDING SEAM METAL	BERRIDGE MANUF., INC.	STANDING SEAM 12" WIDE ZEE-LOCK. BERRIDGE KYNAR 500; COLOR: MATTE BLACK	BERRIDGE MANUFACTURING COMPANY – 210.650.0379	EXTERIOR FACADE	RE: EXTERIOR ELEVATIONS	NIC	NIC
WALL FINISHES								
WD-2	VINYL WOOD PLANK – CARBO	KARNDEAN	36"x6" WP318 VAN GOUGH – CARBO	SUPPLIER: KARDEAN DESIGN FLOORING, 1100 PONTIAC COURT, EXPORT, PA. 15632. CONTACT: LINDSAY SAMMONS STRATEGIC ACCOUNT MANAGER. PHONE: 313.817.3716, WWW.KARNDEAN.COM GLUED WITH WILSONART 740/741 FASTDRYING CONTACT ADHESIVE. CONTACT (ADHESIVE): BILL SLIGHT – 940.726.5016 X100, BSLIGHT@WESTWOODMILLWORK.COM	LOW WALL, WAINSCOT, BOOTH PLATFORM	RE: INTERIOR ELEVATIONS	GENERAL CONTRACTOR	GENERAL CONTRACTOR
WD-3	SHEET PANELING	WESTWOOD MILLWORK, INC.	4'x10'x1/4" SHEET PANELING WITH 6" O.C. GROOVES. G.C. TO CAULK FILL THE JOINT BETWEEN PANELS	CONTACT: BILL SLIGHT – 940.726.5016 X100, BSLIGHT@WESTWOODMILLWORK.COM	PANELING	RE: INTERIOR ELEVATIONS	GENERAL CONTRACTOR	GENERAL CONTRACTOR
WD-5	CUSTOM MDF RED OAK VENEER PANEL	WESTWOOD MILLWORK, INC.	CUSTOM PANELING- 3/4"X4'X 8' MDF WITH 1/16" VENEER. 1/4"X1/4" SQUARE GROOVE, 5-1/2" ON CENTER PAINTED BLACK. STAIN: MINWAX MWB-23 HARVEST GOLD, WATER BASED WOOD STAIN SEALER: 2 COATS, SEAL-ONCE POLY PREMIUM WOOD SEALER, CLEAR/SATIN, WATER BASED	CONTACT: BILL SLIGHT – 940.726.5016 X100, BSLIGHT@WESTWOODMILLWORK.COM	INTERIOR SOFFIT	RE: REFLECTED CEILING PLAN	GENERAL CONTRACTOR	GENERAL CONTRACTOR
WD-6	RED OAK	LOCALLY SOURCED	STAIN WS-1; 3"X	LOCALLY SOURCED	LOW WALL CAPS	RE: INTERIOR ELEVATIONS	GENERAL CONTRACTOR	GENERAL CONTRACTOR
WD-7	BEADBOARD	LOCALLY SOURCED	3/16" X 48" X 96" BEADED WHITE HARDBOARD WALL PANEL	LOCALLY SOURCED	INTERIOR SOFFIT	RE: REFLECTED CEILING PLAN	GENERAL CONTRACTOR	GENERAL CONTRACTOR
WD-9	PINE	LOCALLY SOURCED	GRADE "C", 1" X 6"	LOCALLY SOURCED	TRIM	RE: INTERIOR ELEVATIONS	GENERAL CONTRACTOR	GENERAL CONTRACTOR
WD-10	VINYL WOOD PLANK – RANDOM MIX	KARNDEAN	4-1/2"x48" DI VINCI WOOD PLANK, RL48 NATURAL OAK – 60%, RL51 LORENZO OAK – 20%, RL44 GOLDEN KENT ASH – 20% (2)	SUPPLIER: KARDEAN DESIGN FLOORING, 1100 PONTIAC COURT, EXPORT, PA. 15632. CONTACT: LINDSAY SAMMONS STRATEGIC ACCOUNT MANAGER. PHONE: 313.817.3716, WWW.KARNDEAN.COM GLUED WITH WILSONART 740/741 FASTDRYING CONTACT ADHESIVE. CONTACT (ADHESIVE): BILL SLIGHT – 940.726.5016 X100, BSLIGHT@WESTWOODMILLWORK.COM	DINING ROOM WALLS, HOSTESS STAND, ENTRY VESTIBULE, RESTROOM VESTIBULE, RE: 2&3/A401, 3&4/A402 | BAR DIE WALL, RE: 7/1201	RE: INTERIOR ELEVATIONS	GENERAL CONTRACTOR	GENERAL CONTRACTOR
WOOD STAIN								
WS-1	CUSTOM STAIN	SHERWIN WILLIAMS	SHERWOOD WIPE STAIN CLEAR BASE; STAIN COLOR MATCH: ORDER NUMBER OE0219986A4329; SEALER: ULTRADEC #8331, MOISTURE CURE URETHANE – SATIN FINISH, ULTRA DEC, INC., CONTACT: SCOTT ZAK – 636.296.2900	CONTACT; MIKE KONCILJA, PHONE: 602.653.9577, EMAIL: MIKE.K@SHERWIN.COM	TOP CAPS, RESTROOM DOOR, DINING WOOD TRIM	RE: INTERIOR ELEVATIONS	GENERAL CONTRACTOR	GENERAL CONTRACTOR
FLOORING								
FT-1	LIMESTONE PEARL MATTE	ATLAS CONCORDE	COLOR: LIMESTONE PEARL MATTE, SIZE: 24"x24", JOINT WIDTH: 1/16", GROUT: G-2	CONTACT: NATHAN KANENGISER – 615.853.6684, N.KANENGISER@ATLASCONCORDEUSA.COM, WWW.ATLASCONCORDE.COM	DINING, BAR DINING	RE: FLOOR FINISH PLAN	GENERAL CONTRACTOR	GENERAL CONTRACTOR
FT-2	ITALIAN OAK WOOD MATTE	ATLAS CONCORDE	COLOR: ITALIAN OAK WOOD MATTE, SIZE: 8"x48", JOINT WIDTH: 1/16", GROUT: G-2	CONTACT: NATHAN KANENGISER – 615.853.6684, N.KANENGISER@ATLASCONCORDEUSA.COM, WWW.ATLASCONCORDE.COM	DINING, BAR DINING, RESTROOM	RE: FLOOR FINISH PLAN	GENERAL CONTRACTOR	GENERAL CONTRACTOR
QT-1	DIABLO RED #QT01	DALTILE	DAL-TILE, 8"x8" QUARRY TILE, BASE: SANITARY COVE BASE QUARRY TILE TO MATCH FLOOR TILE, JOINT WIDTH: 1/4", GROUT: G-3 KERAPOXY CQ	CONTACT: EMILY ORR (703) 475-0393. EMILY.ORR@DALTILE.COM.	BAR, SERVICE AISLE, KITCHEN, PREP, FREEZER, WALK-IN, BEER COOLER, DISHWASH, STORAGE, ICE, OFFICE, BAR	RE: FLOOR FINISH PLAN, INTERIOR ELEVATIONS	GENERAL CONTRACTOR	GENERAL CONTRACTOR
WALL TILE								
WT-1	0012 MUSTARD	DALTILE	COLLECTION: GLOSSY, COLOR: MUSTARD, SIZE: 4"x12", THICKNESS: 8.5MM (0.33"), JOINT WIDTH: 1/16", GROUT: G-1	CONTACT: EMILY ORR (703) 475-0393. EMILY.ORR@DALTILE.COM.	POS WALL TILE, TO GO WALL	RE: INTERIOR ELEVATIONS	GENERAL CONTRACTOR	GENERAL CONTRACTOR
WT-2	0109 ARCHITECTURAL GREY	DALTILE	COLLECTION: GLOSSY, COLOR: ARCHITECTURAL GREY, SIZE: 4"x12", THICKNESS: 8.5MM (0.33"), JOINT WIDTH: 1/16", GROUT: G-1	CONTACT: EMILY ORR (703) 475-0393. EMILY.ORR@DALTILE.COM.	POS WALL TILE, TO GO WALL	RE: INTERIOR ELEVATIONS	GENERAL CONTRACTOR	GENERAL CONTRACTOR
WT-4	ARCHITECTURAL GRAY	DALTILE	COLLECTION: SEMI-GLOSS, COLOR: ARCHITECTURAL GRAY, SIZE: 6"x6" FIELD, 6"x6" BULLNOSE (S-4669) & APPROPRIATE SPECIALTY PIECES, THICKNESS: 5/16", JOINT WIDTH: 1/16", GROUT: G-4, PATTERN: RUNNING BOND.	CONTACT: EMILY ORR (703) 475-0393. EMILY.ORR@DALTILE.COM.	RESTROOM WALL TILE	RE: INTERIOR ELEVATIONS	GENERAL CONTRACTOR	GENERAL CONTRACTOR
WT-5	ANTHRACITE	IRIS CERAMICA	COLLECTION: MADERIA, COLOR: ANTHRACITE, SIZE: 9"x36", THICKNESS: 9MM (0.35"), JOINT WIDTH: 1/16", GROUT: G-4, PATTERN: STACK BOND	CONTACT: GIUSEPPE COLUCCI – 714.310.7934, WWW.IRISCERAMICA.COM, IRIS CERAMICA BY EUROWEST DECORATIVE SURFACES.	RESTROOM WALL TILE	RE: INTERIOR ELEVATIONS	GENERAL CONTRACTOR	GENERAL CONTRACTOR
BASE								
TB-2	CHAMBERLAIN	F&D COMMERCIAL	COLOR: CHAMBERLAIN SIZE: BULLNOSE 6"x36", THICKNESS: 10MM (0.39"), JOINT WIDTH: 1/16", GROUT: G-1	CONTACT: JADA SIMON (404) 790-2786. JADA.SIMON@FLOORANDDECOR.COM	BAR/DINING ROOM BASE	RE: FLOOR FINISH PLAN, INTERIOR ELEVATIONS	GENERAL CONTRACTOR	GENERAL CONTRACTOR
QT-1	DIABLO RED #QT01	DALTILE	DAL-TILE, 8"x8" QUARRY TILE, BASE: SANITARY COVE BASE QUARRY TILE TO MATCH FLOOR TILE, JOINT WIDTH: 1/4", GROUT: G-3 KERAPOXY CQ	CONTACT: EMILY ORR (703) 475-0393. EMILY.ORR@DALTILE.COM.	BAR, SERVICE AISLE, KITCHEN, PREP, FREEZER, WALK-IN, BEER COOLER, DISHWASH, STORAGE, ICE, OFFICE, BAR	RE: FLOOR FINISH PLAN, INTERIOR ELEVATIONS	GENERAL CONTRACTOR	GENERAL CONTRACTOR
GROUT								
G-1	BLACK	MAPEI	GROUT: MAPEI, GROUT COLOR: #10 BLACK	SELECT PRODUCT THAT IS APPROPRIATE FOR EACH APPLICATION (I.E.: EPOXY, CEMENT, ETC.) CONSULT TILE MANUFACTURERS FOR RECOMMENDED GROUT FORMULA. ALL GROUT ADHESIVE: MAPEI, "ULTRAFLEX2". DINING, WALL TILE GROUT, USE: MAPEI – "ULTRACOLOR PLUS". BAR, KITCHEN, FREEZER & COOLER QUARRY FLOOR TILE GROUT, USE: MAPEI – "KERAPOXY CQ". CONTACT: SEAN LEICH (832) 276-8291; EMAIL: SLEICH@MAPEI.COM, WEBSITE: WWW.MAPEI.COM	POS WALL TILE	RE: FLOOR FINISH PLAN, INTERIOR ELEVATIONS	GENERAL CONTRACTOR	GENERAL CONTRACTOR
G-2	CHARCOAL	MAPEI	GROUT: MAPEI, GROUT COLOR: #47 CHARCOAL		DINING, ENTRY, RESTROOM VESTIBULE, RESTROOM	RE: FLOOR FINISH PLAN, INTERIOR ELEVATIONS	GENERAL CONTRACTOR	GENERAL CONTRACTOR
G-3	BLACK "KERAPOXY CQ"	MAPEI	GROUT: MAPEI, GROUT COLOR: #10 BLACK		BAR, KITCHEN, COOLER, FREEZER	RE: FLOOR FINISH PLAN, INTERIOR ELEVATIONS	GENERAL CONTRACTOR	GENERAL CONTRACTOR
G-4	IRON	MAPEI	GROUT: MAPEI, GROUT COLOR: #107 IRON		RESTROOM WALL TILE	RE: FLOOR FINISH PLAN, INTERIOR ELEVATIONS	GENERAL CONTRACTOR	GENERAL CONTRACTOR
SOLID SURFACE								
SS-1	SHARPHAM – WATERSTONE COLLECTION	CAMBRIA USA	COLOR/PATTERN: SHARPHAM, PRODUCT: SLAB, FINISH: "MATTE" WATERSTONE COLLECTION, THICKNESS: 3/4"	CONTACT: LAURA BEAVER – LAURA.BEAVER@CAMBRIAUSA.COM 469.332.8696, WWW.CAMBRIAUSA.COM	BAR TOP AND TO-GO TOP	RE: INTERIOR ELEVATIONS, MILLWORK DETAILS	GENERAL CONTRACTOR	GENERAL CONTRACTOR
PLASTIC PANEL								
PP-1	PEARL GRAY	CRANE COMPOSITES	COLOR: 48, PEBBLED EMBOSSED (GLASBORD)	WWW.CRANECOMPOSITES.COM, CONTACT: JEFF TOLLE, PH: 815.274.9425, EMAIL:JTOLLE@CRANECOMPOSITES.COM	BAR MILLWORK	RE: INTERIOR ELEVATIONS	GENERAL CONTRACTOR	GENERAL CONTRACTOR
PP-2	WHITE	CRANE COMPOSITES	COLOR: 85, PEBBLE EMBOSSED (GLASBORD)		SECURITY, STORAGE, PREP, DISHWASH, ICE, SERVICE AISLE, OFFICE	RE: INTERIOR ELEVATIONS	GENERAL CONTRACTOR	GENERAL CONTRACTOR
METAL								
MT-1	METAL CHAIR RAIL	CLASSIC STAINLESS, INC.	3" WIDE HOT ROLLED STEEL CHAIR RAIL W/ PREDRILLED COUNTERSUNK HOLES AND BLACK SCREW: #8x1 1/2" BLACK PHILIPS SCREW	REFER TO 15/A502; CONTACT: GUS MACIAS 214-467-8700 GMACIAS@CLASSICSTAINLESS.NET	DINING, BAR	RE: INTERIOR ELEVATIONS	GENERAL CONTRACTOR	GENERAL CONTRACTOR
MT-2	BLACK MALLEABLE IRON RAIL SYSTEM	LOCALLY SOURCED	BLACK MALLEABLE IRON RAIL SYSTEM, SEALER: SHERWIN WILLIAMS ARMORSEAL 8100 SATIN FINISH	REFER TO SHEET A502 FOR MORE INFORMATION; LOCALLY SOURCED	CAFÉ SCREEN WALL	RE: SHEET A502	GENERAL CONTRACTOR	GENERAL CONTRACTOR
MT-3	METAL CORNER GUARD	CLASSIC STAINLESS, INC.	HOT ROLLED STEEL ANGLE COLOR: NATURAL FINISH W/ PROTECTIVE CLEAR COAT	REFER TO 9/A501 AND 4/A502; CONTACT: GUS MACIAS 214-467-8700 GMACIAS@CLASSICSTAINLESS.NET	BAR DINING, DINING 105, KITCHEN	RE: INTERIOR ELEVATIONS	GENERAL CONTRACTOR	GENERAL CONTRACTOR
MT-4	WROUGHT IRON BLACK	LOCALLY SOURCED	2-1/2" DIAMETER THREADED BLACK IRON PIPE FOOTRAIL & FITTINGS. DRILL & EXPANSION BOLT COLLAR TO CONCRETE SLAB. SEALER: SHERWIN WILLIAMS ARMORSEAL 8100 SATIN FINISH	LOCALLY SOURCED	BAR FOOTRAIL	RE: INTERIOR ELEVATIONS	GENERAL CONTRACTOR	GENERAL CONTRACTOR
MT-5	DILEX-AHKA 80 AE	SCHLUTER	AT BASE USE DILEX-AHKA 80 AE; OUTSIDE CORNER: E 90 AHKA 80 AE; INSIDE CORNER: I 90 AHKA 80 AE	CONTACT: DOUG DALTON – 888.472.4588x4292, DDALTON@SCHLUTER.COM	RESTROOMS	RE: RESTROOM ELEVATIONS	GENERAL CONTRACTOR	GENERAL CONTRACTOR
CEILING								
CT-1	VINYL FACED GYPSUM PANEL CEILINGS	CERTAINTEED	24x48x1/2" VINYL ROCK X", COLOR: WHITE, ITEM #1140-CRF-1, FLAME SPREAD: CLASS "A" WWW.CERTAINTEED.COM	SUSPENSION SYSTEM – ARMSTRONG AL PRELUDE PLUS XL 15/16" ENVIRONMENTAL TEE SYSTEM, ALL ALUMINUM, COLOR: NATURAL ALUMINUM, WWW.ARMSTRONG.COM	STORAGE, OFFICE, DISHWASH, ICE, KITCHEN, PREP, SERVICE AISLE	RE: REFLECTED CEILING PLAN	GENERAL CONTRACTOR	GENERAL CONTRACTOR
CT-2	TIN	AMERICAN TIN CEILINGS	2'x2' TILES: PATTERN #6	AMERICAN TIN CEILING, PATTERN #6, DROP-IN. FINISH: BRUSHED NICKEL (SBN) WWW.AMERICANTINCEILING.COM; SUSPENSION SYSTEM – ARMSTRONG AL PRELUDE PLUS XL 15/16" ENVIRONMENTAL TEE SYSTEM, ALL ALUMINUM, COLOR: SILVER SATIN, WWW.ARMSTRONG.COM	BAR	RE: REFLECTED CEILING PLAN	GENERAL CONTRACTOR	GENERAL CONTRACTOR
DL-1	DUCT LINER	KNAUF FIBER GLASS	DUCT LINER: KNAUF RIGID PLENUM LINER, ONE INCH THICK BY 48" X 120", WITH BLACK POLYMER TOP LAYER AND FACTORY APPLIED BLACK OVERSPRAY. NO VERBIAGE OR ANY TYPE OF MARKINGS TO APPEAR ON BLACK SIDE OF LINER.	NAIL OR ADHESIVELY APPLY DUCT LINER TO UNDERSIDE OF ALL EXPOSED ROOF/CEILING DECKING WITH FOIL FACE TOWARD DECK. FASTEN TO DECK SECURELY SUCH THAT SURFACE IS FREE OF DIMPLES AND LINER HOLDS FLUSH TO DECK WITH NO SAGGING.	DINING BETWEEN JOIST	RE: REFLECTED CEILING PLAN	GENERAL CONTRACTOR	GENERAL CONTRACTOR
PLASTIC LAMINATE								
PL-2	BLACK	PIONITE	#SE101, COLOR: BLACK, FINISH: SUEDE	CONTACT: CHERYL TURNAGE – 323.394.2308, WWW.PANOLAM.COM	SERVICE STATION OPEN SHELVING	RE: MILLWORK DETAILS	GENERAL CONTRACTOR	GENERAL CONTRACTOR
PL-3	SLEEPING IN	PIONITE	#WT870-TL, COLOR: SLEEPING IN, FINISH: TIMBERLINE	CONTACT: CHERYL TURNAGE – 323.394.2308, WWW.PANOLAM.COM	UPPER SHELF (POS CABINET)	RE: INTERIOR DETAILS	GENERAL CONTRACTOR	GENERAL CONTRACTOR
GLASS								
GL-1	NIAGARA	GUARDIAN GLASS COMPANY	PRODUCT: ARCHITECTURAL GLASS "NIAGARA", CONFIGURATION: LAMINATE (SAFETY), THICKNESS: 3/8"	CONTACT: 855.584.5277, WWW.GUARDIANGLASS.COM	P.O.S. STATION DIVIDER GLASS	RE: INTERIOR ELEVATION	GENERAL CONTRACTOR	GENERAL CONTRACTOR

ARCHITECT:

DAVID SCOTT WINDLE, AIA

6201 CAMPUS CIRCLE DRIVE E.
IRVING, TEXAS 75038
TEL: 972.870.1288
WWW.IDSTUDIO4.COM
E-MAIL scottw@idstudio4.com

CORPORATE:
BRINKER RESTAURANT CORPORATION,
A VIRGINIA CORPORATION
3000 OLYMPUS BLVD.
DALLAS, TEXAS 75019
972.980.9917
www.brinker.com

09/23/2024

ISSUE FOR BID

THESE DOCUMENTS ARE FOR BIDDING PURPOSES ONLY. DO NOT USE FOR CONSTRUCTION.

RESTAURANT #CH1679
PROTOTYPE 18.5FS

CHILI'S TOOELE
951 N MAIN STREET
TOOELE, UT 84074

CLIENT: BRINKER RESTAURANT CORP.
A VIRGINIA CORPORATION

DATE	DESCRIPTION
6/27/2024	ISSUE FOR PERMIT
9/23/2024	ISSUE FOR BID

	DATE	DESCRIPTION
2	08.23.2024	OWNER COMMENTS

PROJECT NUMBER:
CHI24007

SHEET TITLE:
FINISH SCHEDULE

SHEET NUMBER:
A002

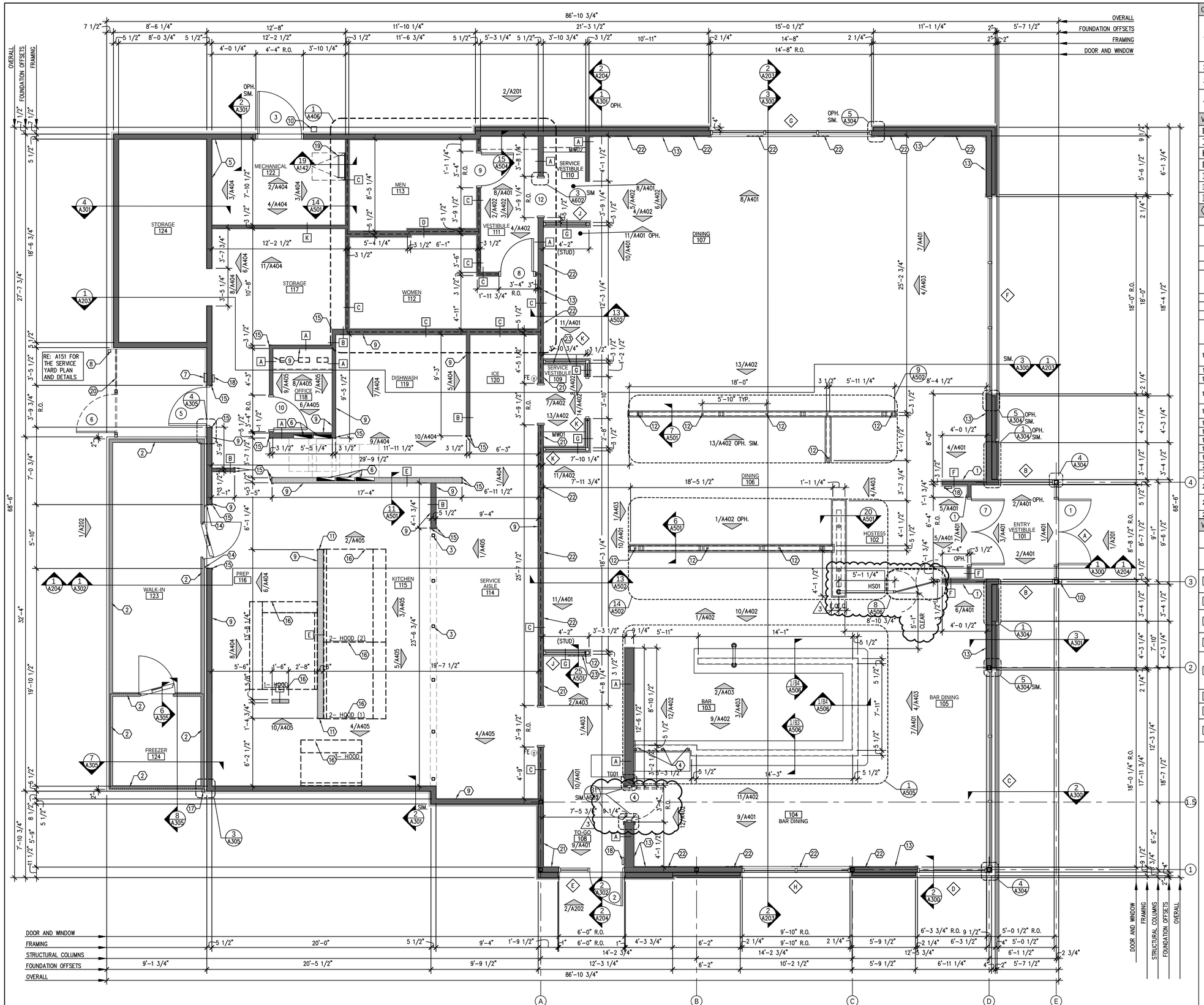

1

GENERAL NOTES

1	FOR THE PURPOSE OF THESE DRAWINGS AND ACCOMPANYING SPECIFICATIONS, THE TERM "BY OWNER" SHALL MEAN ITEM FURNISHED BY OWNER AND INSTALLED BY CONTRACTOR AS PART OF THE WORK OF THIS CONTRACT; THE ABBREVIATION "NIC" (NOT IN CONTRACT) SHALL MEAN ITEM FURNISHED AND INSTALLED BY OWNER UNDER SEPARATE CONTRACT.
2	ALL DIMENSIONS ARE TO FACE OF FRAMING U.N.O.
3	FIRE EXTINGUISHERS FINAL LOCATIONS SHALL BE VERIFIED WITH LOCAL FIRE AUTHORITY.
4	REFER TO MILLWORK SHEETS A504 AND FOR MILLWORK ITEMS MW-01, MW-02, TG-01, AND HS-01. ALL MILLWORK TO BE BY OWNER.

WALL LEGEND

	EXTERIOR FULL HEIGHT WOOD STUD WALL
	INTERIOR LOW WALL
	INTERIOR FULL HEIGHT WITH INSULATION
	INTERIOR FULL HEIGHT WOOD STUD WALL
	INTERIOR FULL HEIGHT METAL STUD WALL
	FULL HEIGHT BRICK VENEER
	COOLER WALL

KEY NOTES

#	
1	TILE AND THIN BRICK
2	WALK-IN REFRIGERATION PANELS FURNISHED BY OWNER TO BE INSTALLED ON TOP OF CONCRETE SLAB – DO NOT INSTALL ON TOP OF FLOOR TILE.
3	3x3 STAINLESS STEEL POST (TYP) SUPPORTED FROM SLAB, POST SUPPLIED AND INSTALLED BY OWNER KES, RE: STRUCTURAL.
4	SUPPORT POST RE: 5/A506
5	PROVIDE THERMAL BATT INSULATION AT PERIMETER WALLS OF THIS ROOM. PROVIDE MINERAL WOOL INSULATION AT WALL TYPE E (IF OCCURS).
6	ELECTRICAL PANELS, RE: ELECTRICAL
7	REAR HOSE BIB, RE: 9/A305 AND PLUMBING
8	DOWNSPOUT AND GUTTER, RE: 10/A304
9	PROVIDE 5/8" PLYWOOD AT PORTIONS OF THIS WALL. REFER TO INTERIOR ELEVATIONS FOR EXACT LOCATIONS. (PROVIDE FIRE RETARDANT TREATED PLYWOOD AT METAL STUD FRAMED WALLS.)
10	KNOX BOX 3200 SERIES. MOUNT NO LOWER THAN 5'-0" AND NO HIGHER THAN 6'-0" A.F.F., VERIFY FINAL LOCATION WITH FIRE MARSHAL PRIOR TO INSTALL
11	STAINLESS STEEL END WALL GUARD, RE: KITCHEN DRAWINGS.
12	2" DIA. STEEL POST, RE: 9/A501.
13	REFER TO INTERIOR ELEVATIONS FOR HEIGHT OF WOOD TRIM AT WALL PANEL. UPPER TRIM TO CONTINUE AROUND PERIMETER OF DINING ROOM AND BAR DINING.
14	STAINLESS STEEL CLOSURE STRIP TO SEAL COOLER/ FREEZER TO WALL
15	STAINLESS STEEL CORNER GUARDS, RE: KITCHEN DRAWINGS
16	LINE OF HOOD ABOVE, RE: MECHANICAL
17	DOWNSPOUT
18	TACTILE EXIT SIGN BY OWNER, RE: A104
19	STEEL LADDER RE: 5/A142.
20	CHAIN LINK FENCE AND GATE BY GC.
21	G.C. TO INSTALL TILE BACKER BOARD BEHIND TILE.
22	PROVIDE 2X12 BLOCKING FOR WALL-MOUNTED TABLES. REFER TO 16/A504 AND INTERIOR ELEVATIONS-A401.
23	PROVIDE 2X12 BLOCKING FOR TRAY JACKS. REFER TO DETAIL 17/A504, AND INTERIOR ELEVATIONS 7/A402 AND 2/A403.
24	WRAP BREAK METAL TIGHT TO COLUMN.

WALL TYPE SCHEDULE

NOTE: 5 1/2" DENOTES A 2x6 WOOD STUD AND 3 1/2" DENOTES A 2x4 WOOD STUD.

MARK	DESCRIPTION (U.N.O.) WALL BOARD	REMARKS
A	FULL HEIGHT WOOD STUD WALL	TO UNDERSIDE OF DECK ABOVE
B	FULL HEIGHT WOOD STUD WALL	TO 6" ABOVE CEILING
C	FULL HEIGHT WOOD STUD WALL (WITH SOUND ATTENUATION WHERE SHOWN ON PLAN)	TO UNDERSIDE OF DECK ABOVE
D	FULL HEIGHT WOOD STUD WALL (WITH SOUND ATTENUATION WHERE SHOWN ON PLAN)	TO 6" ABOVE CEILING
E	FULL HEIGHT METAL STUD WALL (LIMITED COMBUSTIBLE)	TO UNDERSIDE OF STRUCTURE ABOVE W/SLIP TRACK
F	PART-HEIGHT WOOD STUD WALL	TO CEILING ABOVE
G	PART-HEIGHT WOOD STUD WALL 4'-0" A.F.F. TOP OF WALL CAP	REFER TO DETAIL 7/A501
K	FULL HEIGHT WOOD STUD WALL (WITH THERMAL BATT INSULATION	TO UNDERSIDE OF DECK ABOVE

ARCHITECT:

DAVID SCOTT WINDLE, AIA

6201 CAMPUS CIRCLE DRIVE E.
IRVING, TEXAS 75038
TEL: 972.870.1288
WWW.IDSTUDIO4.COM
E-MAIL scottw@idstudio4.com

CORPORATE:
BRINKER RESTAURANT CORPORATION,
A VIRGINIA CORPORATION
3000 OLYMPUS BLVD.
DALLAS, TEXAS 75019
972.980.9917
www.brinker.com

09/23/2024

ISSUE FOR BID

THESE DOCUMENTS ARE FOR BIDDING PURPOSES ONLY. DO NOT USE FOR CONSTRUCTION.

RESTAURANT #CH1679
PROTOTYPE 18.5FS

CHILI'S TOOELE
951 N MAIN STREET
TOOELE, UT 84074

CLIENT: BRINKER RESTAURANT CORP.
A VIRGINIA CORPORATION

DATE	DESCRIPTION
6/27/2024	ISSUE FOR PERMIT
9/23/2024	ISSUE FOR BID

△	DATE	DESCRIPTION
1	09.10.2024	CITY COMMENTS

PROJECT NUMBER:

CHI24007

SHEET TITLE:

DIMENSIONED & NOTED FLOOR PLAN

SHEET NUMBER:

A101

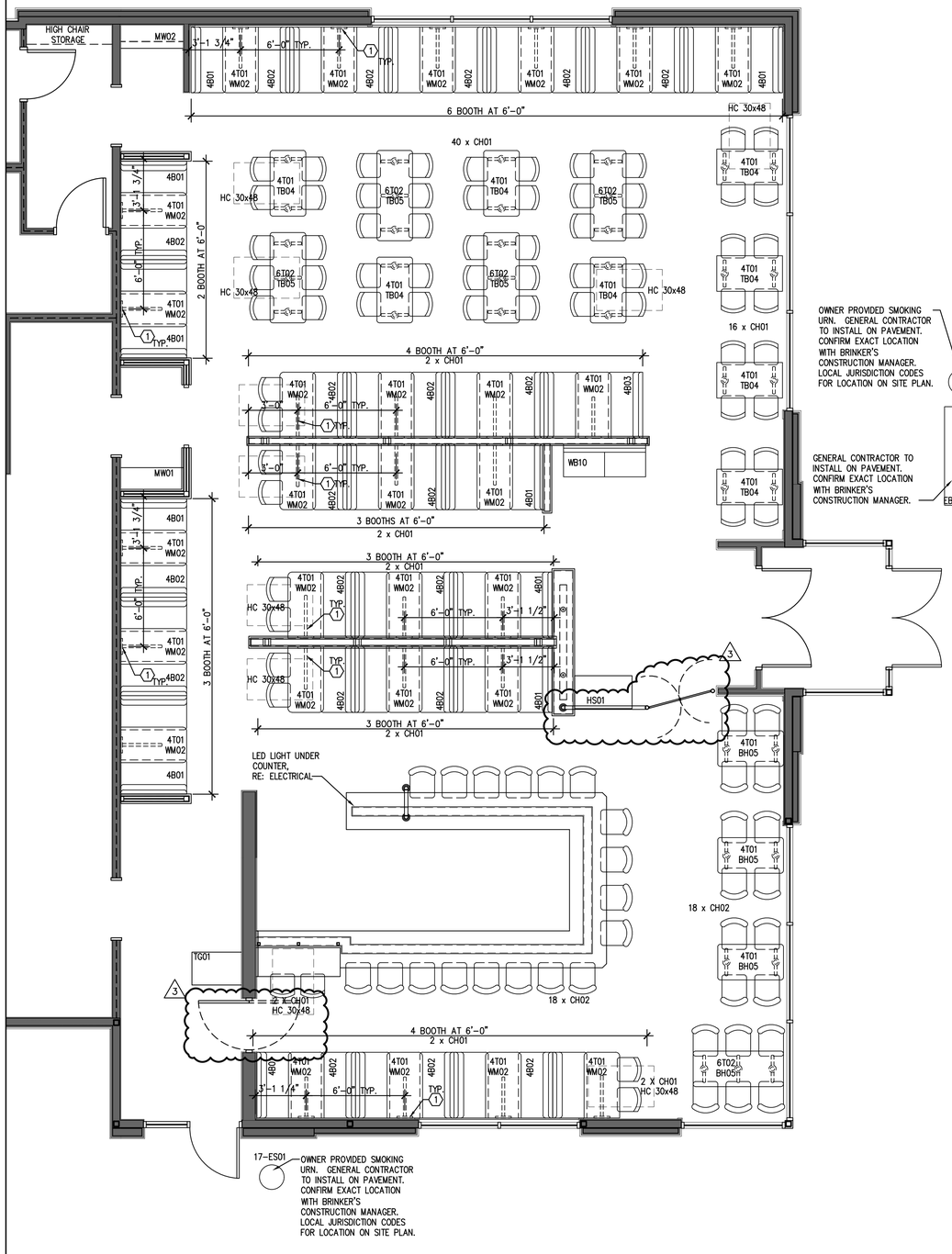

FURNITURE PLAN 1
1/4"=1'-0"

GENERAL NOTE

1	REFER TO 3/A102 AND 4/A102 FOR ACCESSIBLE TABLE SPACING.
2	REFER TO A504 FOR MW01, MW02, AND TG01.
3	GC SHALL PROVIDE MOUNT FOR ALL BOTHS WITH FINISHED BACKS NOT BACKED WITH HALF WALL SIDE. MOUNTING REQUIREMENT SHALL BE CONFIRMED BY BRINKER CONSTRUCTION MANAGER.
4	SELF LEVELING GLIDES NEED TO BE INSTALLED ON ALL TABLES IN THE DINING AREAS.
5	GLIDES THAT DOME FROM THE TABLE BASE MANUFACTURER ARE USED IN THE BAR AND REQUIRE NO CHANGE

KEY NOTES

1	WALLMOUNT BRACKET RE:16/A504

FURNITURE SCHEDULE

PLAN REF:	ITEM #	QTY.	DESCRIPTION	REMARKS
CHAIR/BAR STOOL				
CH01	521925	68	CHAIR CH CS-209US-18 MAPLE	DK CHARCOAL/STA15 GARNET VINYL
CH02	521887	36	BARSTOOL CH METAL/ELM BACK #MFIBS-IF-109	RAL#3003 RUBY RED FINISH W/MT34 GRAPHITE VINYL
BOOTHS FURNITURE				
2B01	521762		BENCH CH 2 TOP SINGLE OAK 30"	BADLAND CANYON/AM56CINNABAR
2B02	521763		BENCH CH 2 TOP DOUBLE OAK 30"	BADLAND CANYON/AM56CINNABAR
2B03	521895		BENCH CH 2 TOP FINISH BACK SINGLE OAK 30"	BADLAND CANYON/AM56CINNABAR
4B01	521764	10	BENCH CH 4 TOP SINGLE OAK 48"	BADLAND CANYON/AM56CINNABAR
4B02	521765	20	BENCH CH 4 TOP DOUBLE OAK 48"	BADLAND CANYON/AM56CINNABAR
4B03	521896	1	BENCH CH 4 TOP FINISH BACK SINGLE OAK 48"	BADLAND CANYON/AM56CINNABAR
BB01	521767		BENCH CH BANQUET OAK PER FOOT	P17 STRIPE AND GRAY (292")
WB10	521788	1	BENCH CH WAITING 60"	W/CHANNEL BACK W/STORAGE
EXTERIOR WAIT FURNITURE				
EB01	521775	1	BENCH CH EXTERIOR P17/P18	BH14225 6' SURFACE MOUNT
SMALLWARES				
ES01	–	2	METROPOLITAN SMOKER'S STATION BLACK	MODEL: FGR93400BK, FURNISHED BY OWNER, INSTALLED BY GC
TABLE TOPS				
2T01	521768		TABLE CH 2TOP WALNTBUTCHRBLOCK	26X30 NATURAL FINISH
2T02	521773		TABLE CH 2TOP WALNTBUTCHRBLOCK	27x30 NATURAL FINISH
2T03	521769		TABLE CH 2TOP WALNTBUTCHRBLOCK	30x30 NATURAL FINISH
4T01	521770	39	TABLE CH 4TOP WALNTBUTCHRBLOCK	26x48 NATURAL FINISH
4T02	521771		TABLE CH 4TOP WALNTBUTCHRBLOCK	30X48 NATURAL FINISH
6T01	521774		TABLE CH 6TOP WALNTBUTCHRBLOCK	30x60 NATURAL FINISH
6T02	522459	5	TABLE CH 6TOP WALNTBUTCHRBLOCK	26x66 NATURAL FINISH
HT01	521886		TABLE CH ANTIQUES BARN 2 TOP	30X30 TABLE TOP ONLY/FAUX BOLTS, RE: 7/A505
HT02	521885		TABLE CH ANTIQUES BARN 4 TOP	30X48 METAL LEGS/FAUX BOLTS
TABLE BASES				
TB01	522245		BASE TABLE 2 TOP SQ/REC.	26x30/ 30x30
TB02	522246		BASE TABLE 4 TOP SQ/CORNER TBL	30X30/ 36X36/ 38X38/ 47X47
TB03	522247		BASE TABLE 4 TOP RECTANGLE/COMMUNITY	26x48/ 30x48
TB04	522249	8	BASE TABLE 6 TOP REC/4 TOP ADA	26X60/ 30X60/ 26X64/ 30X64/ 36X48
TB05	522250	4	BASE TABLE 6 TOP REC- 3/SET	26X72/ 30X72
BH01	518234		BASE TABLE 2 TOP BAR HEIGHT	26X30
BH05	522251	4	BASE TABLE 4/6 TOP BAR HEIGHT	26X60/ 30X60/ 26X64/ 30X64/ 26X48
BH06	520121		BASE TABLE 8 TOP REC BAR HT	26X72/26X82 3/SET
WM01	517662		BASE TABLE 2 TOP WALL MOUNT	26X30/ 30X30
WM02	517663	28	BASE TABLE 4 TOP WALL MOUNT	26X48/ 30X48/ 36X48
PB01	518887		BASE TABLE 4 TOP SQ ADA BASE	(4) POST REQUIRED PER TABLE
PH01	521529	10	HOOK PURSE CH 2/BAG	JHOLTZ BH-BL-02
TL01	522252		TABLE LEVELER	SUPERLEVEL GLIDE TBG-2
PATIO FURNITURE				
UMB-01	515249		7' UMBRELLA CH PATIO	JOCKEY RED
UMB-02	3213		UMBRELLA BASE CH BLACK	
2TP-01	519100		TABLE PATIO CH 2 TOP GRANITE	24X30 GIALLO GOLD
2TP-02	519168		TABLE PATIO CH 2 TOP GRANITE	24X30 GIALLO GOLD W/ HOLE
4TP-01	519099		TABLE PATIO CH 4 TOP GRANITE	36X36 GIALLO GOLD
4TP-02	519167		TABLE PATIO CH 4 TOP GRANITE	36X36 GIALLO GOLD W/ HOLE
4TP-03	519101		TABLE PATIO CH 4 TOP GRANITE	30X48 GIALLO GOLD
4TP-04	519169		TABLE PATIO CH 4 TOP GRANITE	30X48 GIALLO GOLD W/ HOLE
6TP-01	519102		TABLE PATIO CH 6 TOP GRANITE	30X60 GIALLO GOLD
6TP-02	519170		TABLE PATIO CH 6 TOP GRANITE	30X60 GIALLO GOLD W/ HOLE
PB-01	519104		BASETABLE BAR HT PATIO CH-CAST	Z14-22H/24X30 GRANITE
PB-02	519103		BASE TABLE PATIO CH- CAST IRON	Z14-22D/24X30/36X36 GRANITE
PB-03	519105		BASE TABLE PATIO CH- CAST	B10-0522/30X48 ADA GRANITE
PATIO TABLE BASES FOR COASTAL USE.				
PB-04	519223		BASE TABLE PATIO-STAINLESS-SEA	SS1423D/24X30/30X30/GRANITE
PB-05	519224		BASE TABLE PATIO-STAINLESS-SEA	SS1423H/BARHT 24X30/30X30/GRNT
PATIO MISC.				
PC-01	519134		CHAIR PATIO CH WOVEN	JAVA-BLACK FRAME W407AL5625
PC-02	519135		BARSTOOL PATIO CH WOVEN	JAVA-BLACK FRAME W407BAL56250
PB-06	519185		BASE TABLE PATIO-CAST ALUM	36X36/W748-SBSMBLK2828-UMBRLA

NOT USED 2
1/4"=1'-0"

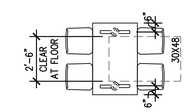

NOTE: DIMENSION SHOWN FOR TABLE BASES LOCATION TO APPLY TO BOTH 4 TOP AND 6 TOP TABLES. UNLESS SHOWN OTHERWISE

ACCESSIBLE TABLE BASE 3
1/4"=1'-0"

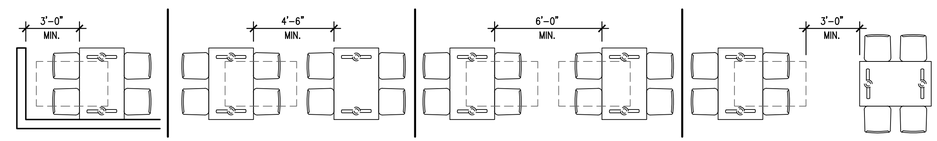

ACCESSIBLE TABLES AT END CONDITION

ADJACENT ACCESSIBLE TABLES

ACCESSIBLE TABLES BACK TO BACK

ACCESSIBLE TABLES AT AISLE

ACCESSIBLE TABLE SPACING 4
1/4"=1'-0"

ARCHITECT:

DAVID SCOTT WINDLE, AIA

6201 CAMPUS CIRCLE DRIVE E.
IRVING, TEXAS 75038
TEL: 972.870.1288
WWW.IDSTUDIO4.COM
E-MAIL scottw@idstudio4.com

CORPORATE:
BRINKER RESTAURANT CORPORATION,
A VIRGINIA CORPORATION
3000 OLYMPUS BLVD.
DALLAS, TEXAS 75019
972.980.9917
www.brinker.com

09/23/2024
ISSUE FOR BID
THESE DOCUMENTS ARE FOR BIDDING PURPOSES ONLY. DO NOT USE FOR CONSTRUCTION.

RESTAURANT #CH1679
PROTOTYPE 18.5FS

CHILI'S TOOELE
951 N MAIN STREET
TOOELE, UT 84074

CLIENT: BRINKER RESTAURANT CORP.
A VIRGINIA CORPORATION

DATE	DESCRIPTION
6/27/2024	ISSUE FOR PERMIT
9/23/2024	ISSUE FOR BID

	DATE	DESCRIPTION
3	09.10.2024	CITY COMMENTS

PROJECT NUMBER:
CHI24007

SHEET TITLE:
FURNITURE PLAN AND SCHEDULES

SHEET NUMBER:
A102

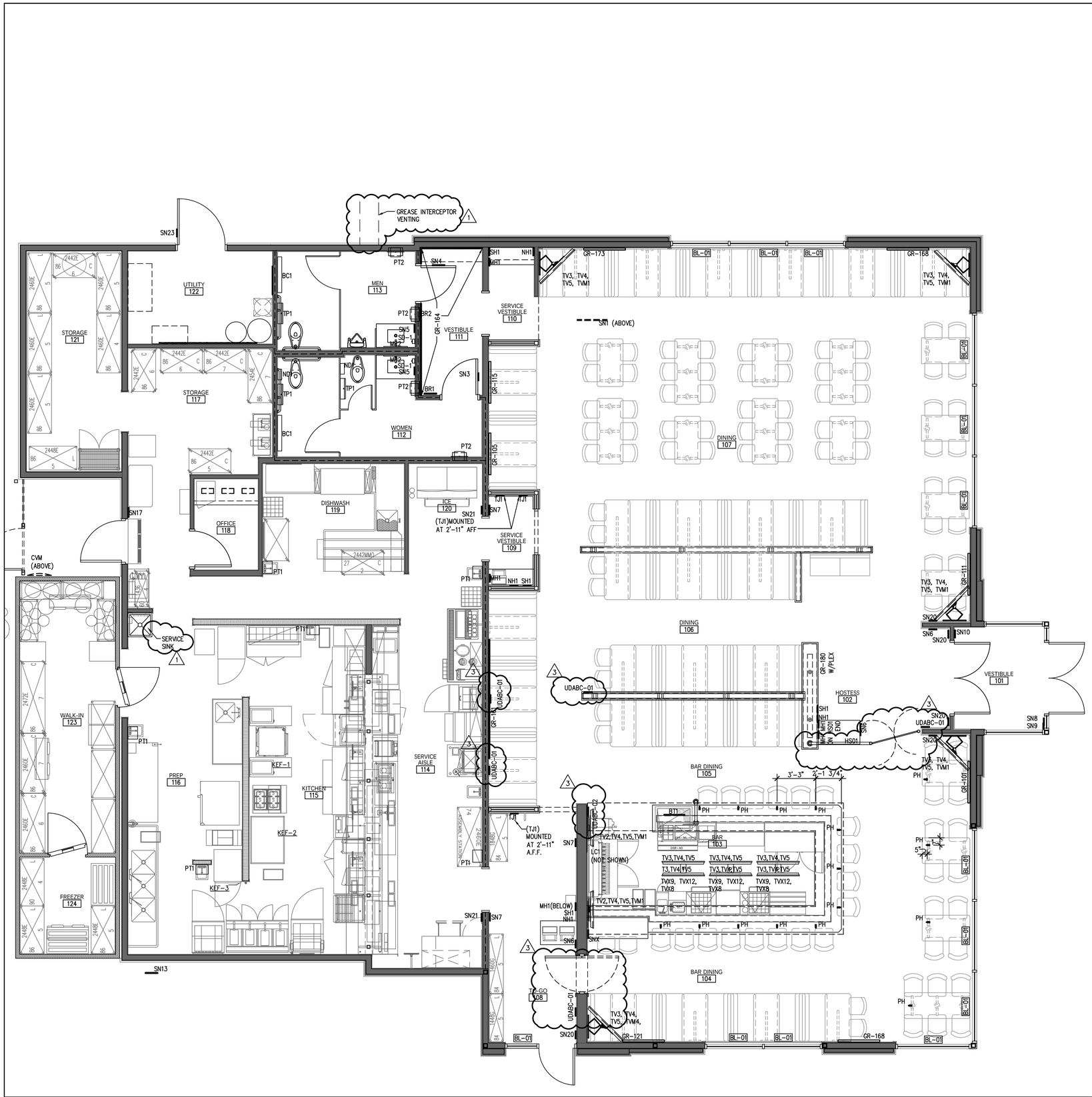

DECOR PLAN
1/4"=1'-0"

1

DECOR FURNISHING SCHEDULE

PLAN REF.	ITEM #	DESCRIPTION	REMARKS	BY OWNER	NIC	GC
WAYFINDING						
BR1	11101	INTERIOR SIGNAGE BRAILLTAC	WOMEN, B.O.SIGN 58" A.F.F. – MAX HEIGHT OF BRAILLE 60" A.F.F.	1		
BR2	11102	INTERIOR SIGNAGE BRAILLTAC	MEN, B.O.SIGN 58" A.F.F. – MAX HEIGHT OF BRAILLE 60" A.F.F.	1		
SN1	520693	INTERIOR SIGNAGE "RESTROOM"	RESTROOM WITH ARROWS D/F, 7.5"x21", 9'–0" A.F.F. TO BOTTOM OF SIGN. COLOR: CHALKBOARD	1		
SN3	521791	WOMEN S/F	'WOMEN' 6.5"X 14.5" @ 66" A.F.F. B.O. SIGN; RE: 4/A402	1		
SN4	521792	MEN S/F	'MEN' 6.5"X 14.5" @ 66" A.F.F. B.O. SIGN; RE: 2/A402	1		
SN5	520694	INTERIOR SIGNAGE "TEAM MEMBERS MUST HAND BEFORE..."	7.75"Hx14.75"W, S/F AT CENTER OF SIGN AT 60" A.F.F., COLOR: CHALKBOARD	2		
SN6	518349	GIFT CARD DISPLAY HOLDER	FINISH: PAINTED CUSTOM ROUTED 3/4" ASH PLYWOOD; HEIGHT AT FRONT ENTRY: 48" A.F.F., AT TOGO: 54" A.F.F.	2		
SN7	520695	INTERIOR SIGNAGE "TEAM MEMBERS ONLY"	7.75"Hx14.75"W, S/F, 60" A.F.F. COLOR: CHALKBOARD	3		
SN8	520696	INTERIOR SIGNAGE "HOURS OF OPERATION"	9"x10" D/F, B/TOP STACKED, COLOR: CHALKBOARD. HEIGHT TO BE COORDINATED WITH BRINKER CONSTRUCTION MANAGER.	1		
SN9	520698	INTERIOR/EXTERIOR SIGNS "MANAGING PARTNER"	9"x10" D/F, B/LOWER, COLOR: CHALKBOARD. HEIGHT TO BE COORDINATED WITH BRINKER CONSTRUCTION MANAGER.	1		
SN10	520697	INTERIOR/EXTERIOR SIGNS "MAXIMUM OCCUPANCY 231"	8.25"x8.25" S/F, B/SIGN, 60 A.F.F. COLOR: CHALKBOARD. COUNT TO BE VERIFIED WITH BRINKER CONSTRUCTION MANAGER	1		
SN13	520699	EXTERIOR SIGNAGE "NO DELIVERIES ACCEPTED BETWEEN"	12"Hx24"W, COLOR: CHALKBOARD. COORDINATE LOCATION PRIOR TO MOUNTING WITH BRINKER CONSTRUCTION MANAGER.	1		
SN17	520702	INTERIOR SIGNAGE "FIRE EXIT ONLY"	10.25"x10.25" FIRE EXIT ONLY S/F, COLOR: CHALKBOARD, B.O. SIGN 58" A.F.F. –MAX HEIGHT OF BRAILLE 60" A.F.F.	1		
SN20	519902	INTERIOR SIGNAGE "EXIT"	8"x8", B.O. SIGN 58" A.F.F. –MAX HEIGHT OF BRAILLE 60" A.F.F.	3		
SN21	519903	INTERIOR SIGNAGE "EXIT ROUTE"	8"x8", B.O. SIGN 48" A.F.F. –MAX HEIGHT OF BRAILLE 60" A.F.F.	2		
SN22	519961	INTERIOR CH 21 YEARS OF AGE (NO PERSON UNDER 21)	21 YEARS AND OLDER TO SIT AT THE BAR, 60" A.F.F.. ONLY INSTALL AT THE INSTRUCTION OF THE BRINKER CONSTRUCTION MANAGER.	1		
SN23	520921	EXTERIOR WAYFINDING CH RISER ROOM	SPRINKLER RISER ROOM, 8"X21"; 60" A.F.F. TO B.O. SIGN	1		
SN24	520559	INT. WAYFINDING CH SKIPTHELINE	SKIP THE LINE, DOWNLOAD APP. 9.5"hx17"w, 44" A.F.F.	1		
SN26	523101	EXTERIOR SIGNAGE "DOOR MUST REMAIN UNLOCKED"	12"Hx24"W, COLOR: CHALKBOARD. COORDINATE LOCATION PRIOR TO MOUNTING WITH BRINKER CONSTRUCTION MANAGER.	1		
TJ1	519034	TRAY JACK HOLDER CH – P16	OAK STAINED WALNUT. HEIGHT TO TOP: 2'–11" (DINING) 3'–5" (BAR DINING). PROVIDE 2X12 BLOCKING, TOP AT 36" A.F.F.	3		
GRAPHIC						
GR–101	522098	GRAPHIC FAJITA FLAMES 42"x30"	LANDSCAPE, BOTTOM AT ART AT 54" A.F.F.	1		
GR–105	522100	GRAPHIC HOT PEPPERS MUSHROOM	PORTRAIT 30"W X 42"H IMAGE SIZE, 54" A.F.F.	1		
GR–111	522104	GRAPHIC RIBS 42"x30"	LANDSCAPE, BOTTOM AT ART AT 54" A.F.F.	1		
GR–115	522106	GRAPHIC RED WELCOME 30"x42"	PORTRAIT, BOTTOM AT ART AT 54" A.F.F.	1		
GR–121	522112	GRAPHIC MEET THE RITAS 42"x30"	LANDSCAPE, BOTTOM AT ART AT 54" A.F.F.	1		
GR–161	522124	GRAPHIC H–WTC HORIZONTAL	"HI! WELCOME TO CHILI'S", POSITIONING: CENTER OF PICTURE ALIGNED WITH CENTER OF BOOTH PLATFORM	1		
GR–164	521889	GRAPHIC CHALKBOARD MURAL	RESTROOM VESTIBULE WALL, 19'–5"x5'–7" MURAL (NEW STORE ONLY)	1		
GR–171	521890	GRAPHIC 'CURBSIDE IS MY BEST SIDE'	36"Wx69"H DECAL			
DECOR						
GR–166	521266	DRAFT BEERS BOARD 12 TAPS	30"Wx42"H, W/MARGARITAS ON TAP, FRAME FINISH; ASH WOOD (PORTRAIT), BOTTOM OF PICTURE AT 60" A.F.F.			
GR–168	521274	DRAFT BEERS BOARD 12 TAPS	42"Wx30"H, W/MARGARITAS ON TAP, FRAME FINISH; ASH WOOD (LANDSCAPE), BOTTOM OF PICTURE AT 4'–6" A.F.F.	2		
GR–173	521304	DECOR ROUND MARGARITA	60"Wx47" ROUND, BOTTOM AT ART AT 54" A.F.F.	1		
GR–180	522202	DECOR PEPPER 'S'	METAL PEPPER SCREEN WITH MULTI–COLORED SQUARES	1		
PUBLIC IMAGERY						
SN25	522547	SIGN TOGO PARKING VIRTUAL BRAND	VMMIC STICKERS ALUMINUM 12 X 22	10		
MR2	521711	MIRROR CH RESTROOM 24"W X 40"H	2.78 FRAME, 18.5 X 34.5 MIRROR, BY G.C., MAX. MOUNTING HT. 3'–3" A.F.F. TO BOTTOM OF MIRROR 3M™ ANTI–GRAFFITI FILM	2		
MISCELLANEOUS DECOR						
HS01	518661	HOSTESS STAND	COORDINATE WITH WESTWOOD. PROVIDED BY OWNER INSTALLED BY GC	1		
UC01	12630	OFFICE UPPER CABINETS	COORDINATE WITH WESTWOOD. PROVIDED BY OWNER INSTALLED BY GC	1		
UC02	12630	OFFICE UPPER CABINETS	COORDINATE WITH WESTWOOD. PROVIDED BY OWNER INSTALLED BY GC	1		
EVP	–	EVACUATION PLAN	8.5x11 BLACK FRAME 60" A.F.F. LAMINATED EVAC. PLAN PROVIDED BY OWNER			X
DP1	522403	DOOR PULL CH PEPPER SNGLE–LEFT	ALUM	3		
DP2	522404	DOOR PULL CH PEPPER SNGLE–RIGHT	ALUM	2		
MARCO (EDT-EARLY DELIVERY TRUCK)						
LC1		LIQUOR CAGE PROTO 18		1		
HP6		BAR CROWN PROTO 18.4 (STRETCH)		1		
BLIND EXPRESS-ROLLER SHADE PER QUOTE						
BL–01	521777	ROLLER SHADE CH P18	SHEERWEAVE 2500 1% OPEN	1		
BL–02	521536	FOYER DR SHADE CH (2) ALL NRO'S	SHEERWEAVE 2500 1% OPEN			
BL–03	521537	TO GO DOOR & WINDOW PKG	P18/17/16/4500			
PLAYNETWORK TELEVISION (EDT - EARLY DELIVERY TRUCK)						
TVM1	PA762	WALL TV MOUNT 32"–70"	PA762 PEERLESS (EARLY SHIP FOR GC INSTALL)	7		
TVX8		PLB–1 CEILING MOUNT	BACK TO BACK	3		
TVX9		CMJ470 CEILING PLATE WOOD CEILING		3		
TVX12	CMJ300	TV FLANGE, 4"X4" UNISTRUT CEILNG	USE W/PEERLESS EXT PIPES	8		
TV2	519131	TV 43" SAMSUNG	LED/LCD, QN90B, 3 YEAR WARRANTY	2		
TV3	519133	TV 55" SAMSUNG	LED/LCD, DB55E, 3 YEAR WARRANTY	5		
TV4	517692	HDMI CABLES		13		
TV5	500168	MISC. PARTS		13		
SMALLWARES FURNISHING SCHEDULE						
BC1	6910	TABLE HORIZONTAL BABY CHANGING	#7818–24110	2		
PT1	515254	DISPENSER PAPER TOWEL HANDS FREE (KITCHEN)	#656973 SAN JAMAR T7000TBK; VERIFY COUNT PER PLAN.	6		
PT2	–	DISPENSER PAPER TOWEL (RESTROOM)	#1183901 SAN JAMAR T8400TBK	4		
TP1	6479	DISPENSER TOILET PAPER 58T	58T 681910	3		
MH1	518314	MENU HOLDER WIRE	3.875" WALL MOUNT. CONFIRM MOUNTING LOCATION WITH BRINKER.	5		
BT1	519279	BAR TRAY HOLDER – WIRE	16X22X6 STAINLESS F309–01–19	1		
SH1	518983	SILVERWARE HOLDER	CONFIRM MOUNTING LOCATION WITH BRINKER.	4		
NH1	518984	NAPKIN HOLDER	CONFIRM MOUNTING LOCATION WITH BRINKER.	4		
SD–1		SOAP DISPENSER	F1301BC	2		
PH		PURSE HOOK BY HUMP HOOKS	HHS–HMBLK, WWW.HUMPHOOKS.COM; LOCATE UNDERNEATH BARTOP AND TALL BAR DINING TABLES	20		
CVM		CONVEX MIRROR	CONFIRM MOUNTING LOCATION WITH BRINKER.	1		
ND1	880184	DISPOSAL NAPKIN CH LADIES	BOBRICK B–270 SANITARY NAPKIN RECEPTACLE STAINLESS STEEL	2		
UTAH DEPARTMENT OF ALCOHOLIC BEVERAGE CONTROL SIGNS						
UDABC–01	–	BAR– NO ONE UNDER 21 ALLOWED		5		
UDABC–02	–	HEALTH–DUI WARNING SIGN		1		

ARCHITECT:

DAVID SCOTT WINDLE, AIA

6201 CAMPUS CIRCLE DRIVE E.
IRVING, TEXAS 75038
TEL: 972.870.1288
WWW.IDSTUDIO4.COM
E-MAIL scottw@idstudio4.com

CORPORATE:
BRINKER RESTAURANT CORPORATION,
A VIRGINIA CORPORATION
3000 OLYMPUS BLVD.
DALLAS, TEXAS 75019
972.980.9917
www.brinker.com

09/23/2024
ISSUE FOR BID
THESE DOCUMENTS ARE FOR BIDDING PURPOSES ONLY. DO NOT USE FOR CONSTRUCTION.

RESTAURANT #CH1679
PROTOTYPE 18.5FS

CHILI'S TOOELE
951 N MAIN STREET
TOOELE, UT 84074

CLIENT: BRINKER RESTAURANT CORP.
A VIRGINIA CORPORATION

DATE	DESCRIPTION
6/27/2024	ISSUE FOR PERMIT
9/23/2024	ISSUE FOR BID

#	DATE	DESCRIPTION
1	08.07.2024	CITY COMMENTS
3	09.10.2024	CITY COMMENTS

PROJECT NUMBER:
CHI24007

SHEET TITLE:
DECOR PLAN AND SCHEDULES

SHEET NUMBER:
A103

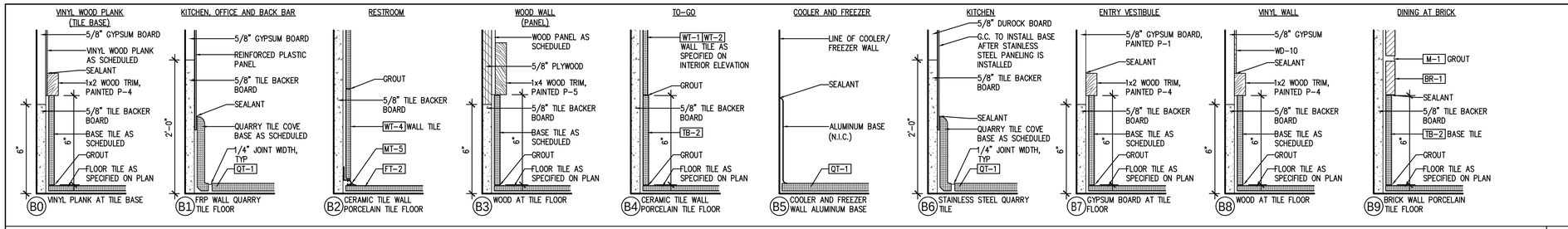

BASE TYPES 3
3"=1'-0"

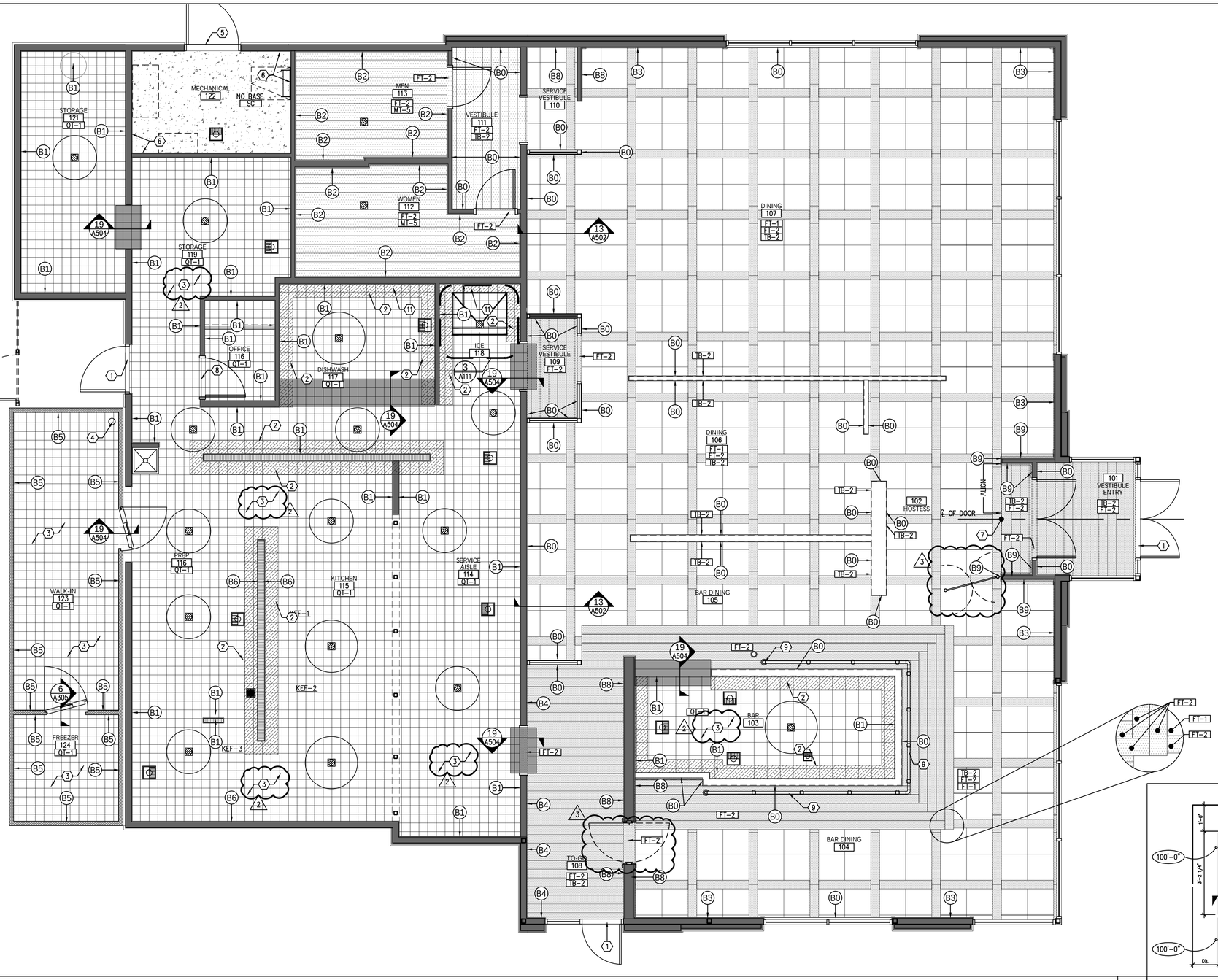

FINISH FLOOR PLAN 1
1/4"=1'-0"

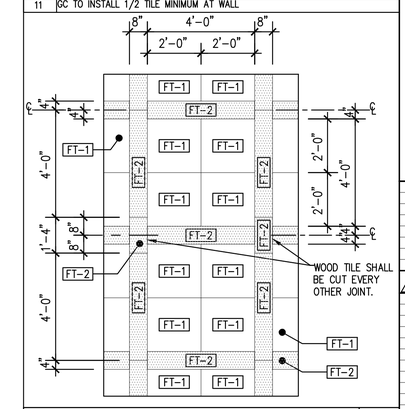

FLOOR DETAIL 2
3/8"=1'-0"

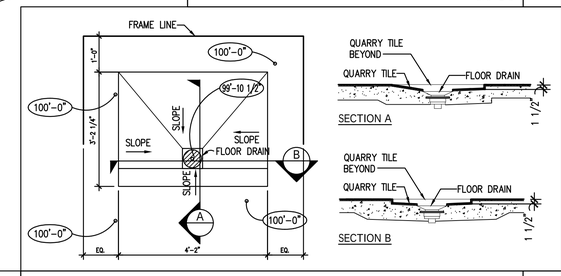

SLAB DETAIL 3
1/2"=1'-0"

GENERAL NOTES

1	MOVEMENT JOINTS AT FLOOR TILE TO BE LOCATED AS CLOSE AS POSSIBLE TO THE NEAREST CONTROL JOINT IN THE CONCRETE SLAB (RE: STRUCTURAL PLANS FOR CONTROL JOINT LOCATIONS). RE: 18/A504 FOR MOVEMENT JOINT DETAIL AT FLOOR TILE.
2	FOR ALL BASE TYPES (B0–B9) REFER TO 3/A111.
3	TILE IS TO BE FLOATED UNDER ALL EQUIPMENT SO THE FLOOR DRAINS.

FLOOR FINISH LEGEND

FLOOR TYPES

LEGEND	TYPE	COLOR NAME	REMARKS
	FT-1/ FT-2	LIMESTONE PEARL MATTE / ITALIAN OAK WOOD MATTE	ATLAS CONCORDE, COLOR: LIMESTONE PEARL MATTE, SIZE: 24"x24", JOINT WIDTH: 1/16", GROUT: G-2 / ITALIAN OAK WOOD MATTE, SIZE: 8"x48", JOINT WIDTH: 1/16", GROUT: G-2
	FT-2	ITALIAN OAK WOOD MATTE	ATLAS CONCORDE, COLOR: ITALIAN OAK WOOD MATTE, SIZE: 8"x48", JOINT WIDTH: 1/16", GROUT: G-2. INSTALL IN RUNNING BOND, JOINTS STAGGER AT 3RD POINTS
	QT-1	DIABLO RED #0T01	DAL-TILE, 8"x8" QUARRY TILE: KITCHEN, BAR, COOLER AND FREEZER, KERAPOXY CQ. GROUT JOINTS @ QUARRY TILE TO BE 1/4", GROUT: G-3
	SC		SEALED CONCRETE

TILE BASE

TYPE	COLOR NAME	REMARKS
TB-2	CHAMBERLAIN	F&D COMMERCIAL,, COLOR: CHAMBERLAIN, SIZE: BULLNOSE 6"x36", THICKNESS: 10MM (0.39"), JOINT WIDTH: 1/16", GROUT: G-1
QT-1	DIABLO RED #0T01	DAL-TILE, 8"X8" QUARRY TILE, BASE: 5"x8" SANITARY COVE BASE QUARRY TILE TO MATCH FLOOR TILE. KITCHEN, BAR, COOLER AND FREEZER, "KERAPOXY CQ" EPOXY. GROUT JOINTS @ QUARRY TILE TO BE 1/4", GROUT: G-3

GROUT

TYPE	COLOR NAME	REMARKS
G-1	BLACK #10	MAPEI – POS WALL TILE: "ULTRACOLOR PLUS"
G-2	CHARCOAL #47	MAPEI – DINING, RESTROOM, RESTROOM VESTIBULE: "ULTRACOLOR PLUS"
G-3	BLACK #10	MAPEI – KITCHEN, BAR, COOLER, FREEZER: "KERAPOXY CQ"
G-4	IRON #107	MAPEI – RESTROOM WALLS "ULTRACOLOR PLUS"

NOTES: SELECT PRODUCT THAT IS APPROPRIATE FOR EACH APPLICATION (IE: EPOXY, CEMENT, ETC.). CONSULT TILE MANUFACTURERS FOR RECOMMENDED GROUT FORMULA

KEY NOTES

#	KEY NOTES
1	THRESHOLD, RE: 1/A501
2	WATERPROOF MEMBRANE, RE: 4/A501
3	EPOXY GROUT AT WALK-INS, KITCHEN AND BAR AREAS.
4	BEER CHASE, RE: PLUMBING
5	THRESHOLD, RE: 3/A501
6	CONCRETE BACKER BOARD TO 12" A.F.F. CAULK TO FLOOR.
7	STARTING POINT OF TILE.
8	THRESHOLD INSTALLED OVER TOP OF FLOOR TILE, RE: 2/A501
9	FLOOR MOUNTED METAL FOOTRAIL, RE: SHEET A506
10	SODA CHASE, RE: PLUMBING
11	GC TO INSTALL 1/2 TILE MINIMUM AT WALL

ARCHITECT:
DAVID SCOTT WINDLE, AIA
6201 CAMPUS CIRCLE DRIVE E.
IRVING, TEXAS 75038
TEL: 972.870.1288
WWW.IDSTUDIO4.COM
E-MAIL scottw@idstudio4.com

CORPORATE:
BRINKER RESTAURANT CORPORATION, A VIRGINIA CORPORATION
3000 OLYMPUS BLVD.
DALLAS, TEXAS 75019
972.980.9917
www.brinker.com

09/23/2024
ISSUE FOR BID
THESE DOCUMENTS ARE FOR BIDDING PURPOSES ONLY. DO NOT USE FOR CONSTRUCTION.

RESTAURANT #CH1679
PROTOTYPE 18.5FS

CHILI'S TOOELE
951 N MAIN STREET
TOOELE, UT 84074

CLIENT: BRINKER RESTAURANT CORP. A VIRGINIA CORPORATION

DATE	DESCRIPTION
6/27/2024	ISSUE FOR PERMIT
9/23/2024	ISSUE FOR BID

#	DATE	DESCRIPTION
2	08.23.2024	OWNER COMMENTS
3	09.10.2024	CITY COMMENTS

PROJECT NUMBER:
CHI24007

SHEET TITLE:
FLOOR FINISH PLAN

SHEET NUMBER:
A111

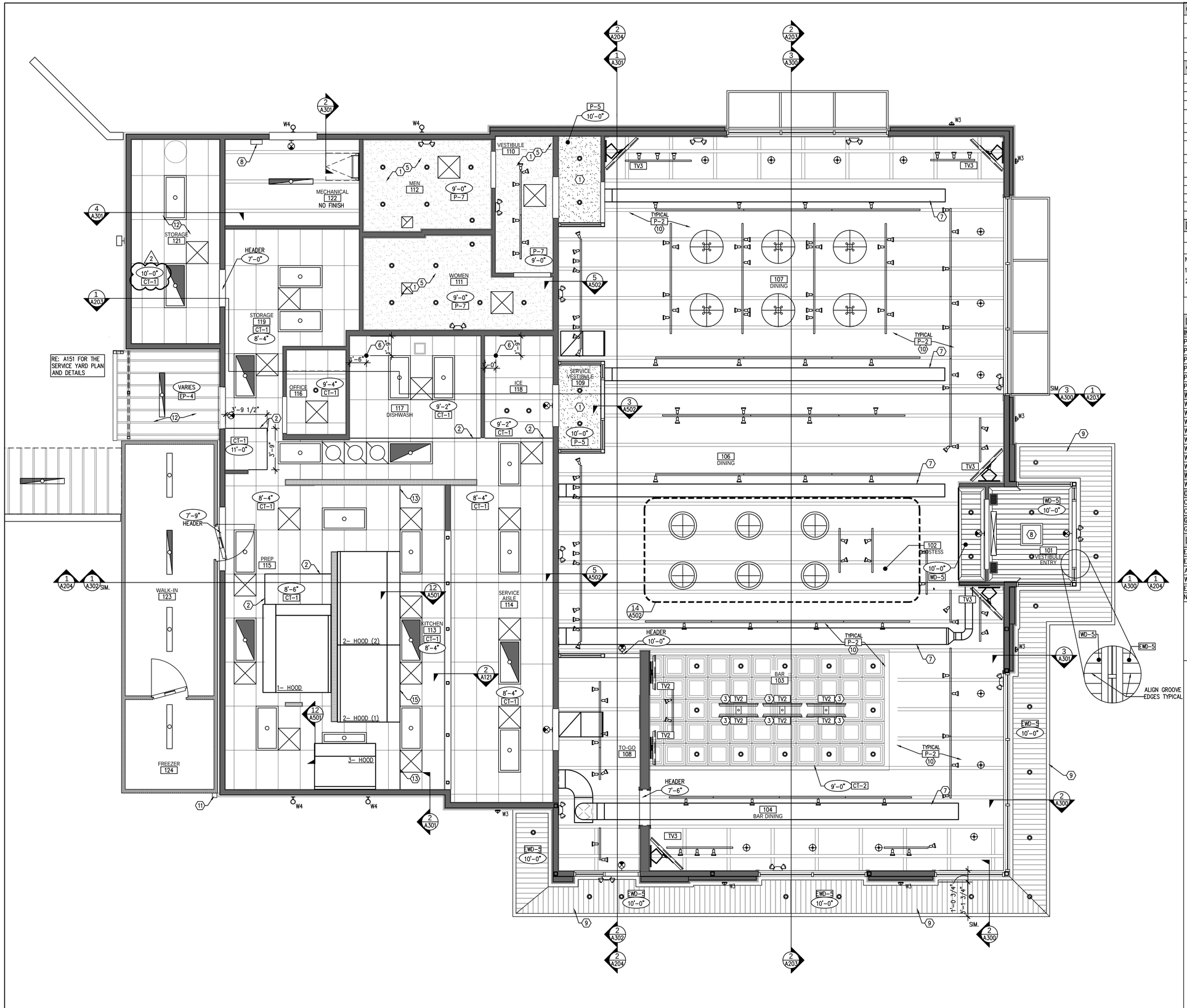

REFLECTED CEILING PLAN 1/4"=1'-0" 1

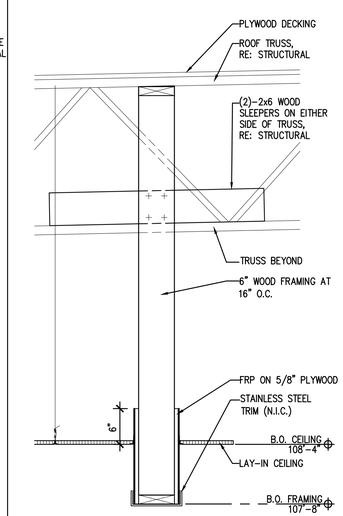

CEILING AT PASS SHELF 1"=1'-0" 2

GENERAL NOTES	
1	REFER TO A504 FOR MILLWORK DETAILS.
2	"BY OWNER" SHALL MEAN ITEM FURNISHED BY OWNER, ASSEMBLED AND INSTALLED BY CONTRACTOR AS PART OF THE WORK OF THIS CONTRACT.
3	"NOT IN CONTRACT" SHALL MEAN ITEM PROVIDED AND INSTALLED BY OWNER UNDER SEPARATE CONTRACT.
4	REFER TO FOR WALL MURALS.

(#)	KEY NOTES
1	5/8" GYPSUM BOARD ON 2x6 WOOD FRAMING AT 24" O.C.
2	VERTICAL CEILING PANELS TO TRANSITION CHANGE IN HEIGHT.
3	POLE MOUNTED TV, RE: 6/A500.
4	ROOF LADDER HATCH, RE: 5 AND 10/A142.
5	DO NOT FIELD PAINT DIFFUSERS. DIFFUSERS ARE PRE-FINISHED AT FACTORY PER MECHANICAL SCHEDULE.
6	START POINT ON CEILING GRID.
7	EXPOSED FABRIC DUCT RE: MECHANICAL
8	ELECTRIC UNIT HEATER MOUNTED ON FACTORY AVAILABLE CEILING BRACKET. RE: M101
9	CANOPY, BY G.C., RE: STRUCTURAL
10	OPEN TO STRUCTURE ABOVE. INSTALL DUCKBOARD BETWEEN STRUCTURE PER SPECIFICATIONS, PAINT STRUCTURE, CONDUITS P-2, TYPICAL
11	DOWNSPOUT
12	OPEN TO STRUCTURE ABOVE. RADIANT BARRIER ON BOTTOM FACE
13	CEILING GRID BREAK POINT
14	METAL GUTTER AND DOWNSPOUT, RE: 1 AND 2/A142
15	ALIGN CEILING GRID WITH EDGE OF HOOD

X-XX SCHEDULE

MARK		BO	NIC	SHIP
TV5	TV 55" LED/LCD		DS	

NOTE:
1. RE: SHEET A500 FOR TV DETAILS
2. RE: SHEET A104 DECOR FURNISHING SCHEDULE
   * DS - DROP SHIP

-	INTERIOR FINISH SCHEDULE
INTERIOR PAINT	
P-1	WARM STONE
P-2	URBANE BRONZE
P-4	TRICORN BLACK
P-5	REQUISITE GREY
P-6	SALUTE RED
P-7	CHATROOM
WOOD PANELING	
WD-2	VINYL WOOD PLANK - CARBO
WD-3	SHEET PANELING
WD-4	DOUGLAS FIR
WD-5	CUSTOM MDF RED OAK VENEER PANEL
WD-6	RED OAK
WD-7	BEADBOARD
WD-9	PINE
WD-10	VINYL WOOD PLANK - CLASSIC OAK
WOOD STAIN	
WS-1	CUSTOM STAIN
CEILING	
CT-1	VINYL FACED GYPSUM CEILING PANEL
CT-2	AMERICAN TIN CEILING TILE
GLASS	
GL-1	NIAGARA

-	EXTERIOR FINISH SCHEDULE
EXTERIOR PAINTS AND STAINS	
EP-4	TRICORN BLACK
AW-1	STANDING SEAM METAL
WOOD PANELING	
EWD-5	CUSTOM EXTERA CORE RED OAK VENEER PANEL

NOTE: FOR COMPLETE SPECIFICATIONS OF FINISHES, REFER TO SHEET A002.

ARCHITECT:
DAVID SCOTT WINDLE, AIA
6201 CAMPUS CIRCLE DRIVE E.
IRVING, TEXAS 75038
TEL: 972.870.1288
WWW.IDSTUDIO4.COM
E-MAIL scottw@idstudio4.com

CORPORATE:
BRINKER RESTAURANT CORPORATION, A VIRGINIA CORPORATION
3000 OLYMPUS BLVD.
DALLAS, TEXAS 75019
972.980.9917
www.brinker.com

09/23/2024
ISSUE FOR BID
THESE DOCUMENTS ARE FOR BIDDING PURPOSES ONLY. DO NOT USE FOR CONSTRUCTION.

RESTAURANT #CH1679
PROTOTYPE 18.5FS

CHILI'S TOOELE
951 N MAIN STREET
TOOELE, UT 84074

CLIENT: BRINKER RESTAURANT CORP.
A VIRGINIA CORPORATION

DATE	DESCRIPTION
6/27/2024	ISSUE FOR PERMIT
9/23/2024	ISSUE FOR BID

#	DATE	DESCRIPTION
2	08.23.2024	OWNER COMMENTS

PROJECT NUMBER:
CHI24007

SHEET TITLE:
REFLECTED CEILING PLAN

SHEET NUMBER:
A121

NWCB TECHNICAL DOCUMENT

SUSPENDED CEILINGS
401

SUSPENSION SYSTEMS FOR ACOUSTICAL LAY-IN CEILINGS SEISMIC DESIGN CATEGORIES D, E & F

THIS DOCUMENT HAS BEEN REVISED BASED ON CURRENT BUILDING CODE STANDARDS. IN ALL BUILDINGS, OTHER THAN STRUCTURES CLASSIFIED AS ESSENTIAL FACILITIES, SUSPENDED CEILINGS INSTALLED IN ACCORDANCE WITH THE PRESCRIPTIVE PROVISIONS OF THIS DOCUMENT ARE DEEMED TO COMPLY WITH THE CURRENT BUILDING CODE INTERPRETATION.

THIS DOCUMENT PROVIDES THE 2021 IBC REFERENCED STANDARDS FOR THE INSTALLATION OF SUSPENSION SYSTEMS FOR ACOUSTICAL LAY-IN CEILINGS. INCORPORATION OF THIS DOCUMENT WILL PROVIDE A MORE UNIFORM STANDARD FOR INSTALLATION AND INSPECTION. THIS DOCUMENT IS DESIGNED TO ACCOMPLISH THE INTENT OF THE INTERNATIONAL BUILDING CODE (2021 IBC) WITH REGARD TO THE REQUIREMENTS FOR SEISMIC DESIGN CATEGORY D, E AND F FOR SUSPENDED CEILINGS AND RELATED ITEMS. UNLESS SUPPORTED BY ENGINEERING, THE SUSPENSION SYSTEM SHALL BE INSTALLED PER THESE REQUIREMENTS AND THOSE OF THE REFERENCED DOCUMENTS. MANUFACTURERS' RECOMMENDATIONS SHOULD BE FOLLOWED WHERE APPLICABLE.

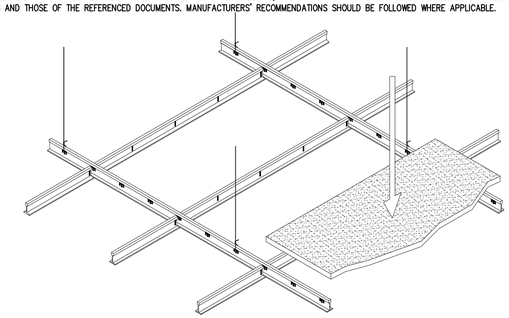

GENERAL RECOMMENDATIONS

- REFERENCED SOURCES PER HIERARCHY: 2021 IBC (CALIFORNIA BUILDING CODE), AMERICAN SOCIETY OF CIVIL ENGINEERS (ASCE 7–16), AMERICAN SOCIETY OF TESTING MATERIALS (ASTM C 635, ASTM C 636, ASTM E 580/E 580M), AND CEILINGS AND INTERIOR SYSTEMS CONSTRUCTION ASSOCIATION (CISCA).
- PARTITIONS THAT ARE TIED TO THE CEILING AND ALL PARTITIONS GREATER THAN 6 FEET IN HEIGHT SHALL BE LATERALLY BRACED TO TEH STRUCTURE. BRACING SHALL BE INDEPENDENT OF THE CEILING SPLAY BRACING SYSTEM. SOURCE: ASCE 7–16 SECTION 13.5.8.1
- FOR FURTHER INFORMATION ON BRACING OF NON–LOAD BEARING PARTITIONS, REFER TO NWCB TECHNICAL DOCUMENT #200–501.
- ALL MAIN BEAMS ARE TO BE HEAVY DUTY (HD). SOURCE: ASTM E580 SECTION 5.1.1
- CEILINGS LESS THAN OR EQUAL TO 144 FT2 AND SURROUNDED BY WALLS CONNECTED TO THE STRUCTURE ABOVE ARE EXEMPT FROM THE SEISMIC DESIGN REQUIREMENTS. SOURCE: ASTM E580 SECTION 1.4
- THESE RECOMMENDATIONS ARE INTENDED FOR SUSPENDED CEILINGS AND RELATED COMPONENTS IN AREAS THAT REQUIRE RESISTANCE TO THE EFFECTS OF EARTHQUAKE MOTIONS. SOURCE: ASTM E580 SECTION 3.2
- ALL WIRE TIES ARE TO BE THREE TIGHT TURNS AROUND THEMSELVES WITHIN THREE INCHES. TWELVE–GAUGE HANGER WIRE SPACED 4 FT ON CENTER (FIGURE 1). SOURCE: ASTM C636 SECTION 2.3.4
- CHANGES IN CEILING PLANES WILL REQUIRE POSITIVE BRACING. SOURCE: ASTM E580 SECTION 5.2.8.6

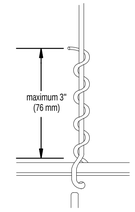

FIGURE 1

NOT USED | 1

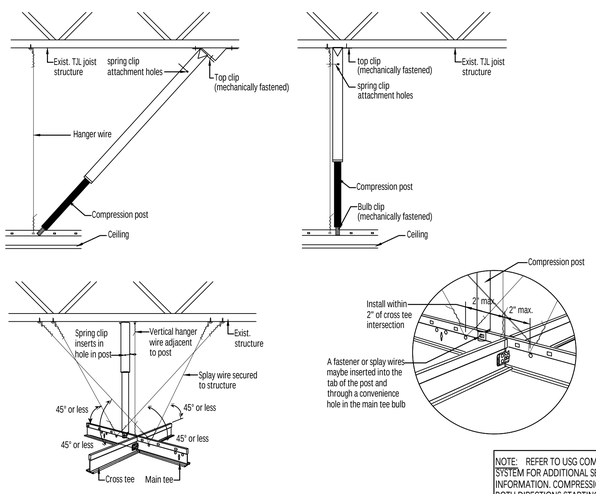

NOTE: REFER TO USG COMPRESSION POST SUSPENSION SYSTEM FOR ADDITIONAL SEISMIC DETAILS AND INFORMATION. COMPRESSION POST TO BE 12 FT. O.C. IN BOTH DIRECTIONS STARTING 6 FT. FROM THE WALLS

CEILING WIRE AND COMPRESSION STRUT DETAIL
N.T.S. | 3

FIGURE 2
LATERAL FORCE BRACING

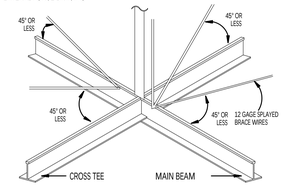

FIGURE 3
MAXIMUM RECOMMENDED LENGTHS FOR VERTICAL STRUTS

EMT CONDUIT	
1/2" EMT conduit	up to 5'-10"
3/4" EMT conduit	up to 7'-8"
1" EMT conduit	up to 9'-9"
METAL STUDS	
Single 1-5/8" metal stud (20 gauge)	up to 12'-0"
Back-to-back 1-5/8" metal stud (20 gauge)	up to 15'-0"
Single 2-1/2" metal stud (20 gauge)	up to 13'-6"
Back-to-back 2-1/2" metal stud (25 gauge)	up to 15'-0"

SOURCE: PORTLAND BUILDING DEPARTMENT

NOTE: PLENUM AREAS GREATER THAN 15'-0" WILL REQUIRE ENGINEERING CALCULATIONS.

FIGURE 4a
ATTACHED WALL MOLDING REQUIREMENTS

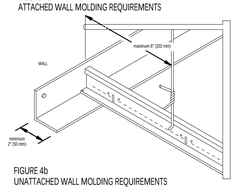

FIGURE 4b
UNATTACHED WALL MOLDING REQUIREMENTS

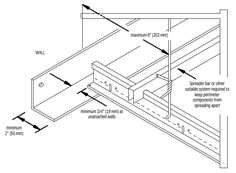

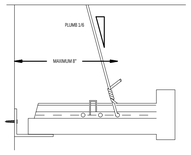

FIGURE 5a

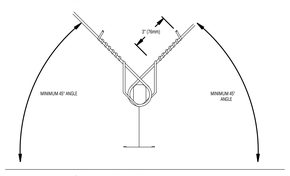

FIGURE 5b • COUNTER SLOPING

VERTICAL HANGER WIRE ATTACHMENT

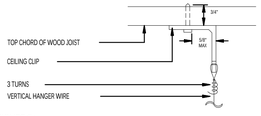

FIGURE 6a

SPLAYED SEISMIC BRACING WIRE ATTACHMENT

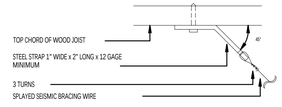

FIGURE 6b

SPREADER BARS (FIGURE 4b)

- TERMINAL ENDS OF MAIN RUNNERS AND CROSS MEMBERS SHALL BE TIED TOGETHER OR HAVE SOME OTHER APPROVED MEANS TO PREVENT THEIR SPREADING. SOURCE: ASTM E580 SECTION 5.2.4
- SPREADER BARS ARE NOT REQUIRED AT PERIMETERS WHERE RUNNERS ARE ATTACHED DIRECTLY TO CLOSURE ANGLES.
- SPREADER BARS ARE NOT REQUIRED IF A 90 DEGREE INTERSECTING CROSS OR MAIN IS WITHIN 8 INCHES OF THE PERIMETER WALL.
- WHERE SUBSTANTIATING DOCUMENTATION HAS BEEN PROVIDED TO THE LOCAL JURISDICTION, PERIMETER CLIPS MAY BE USED TO SATISFY THE REQUIREMENTS FOR SPREADER BARS. SOURCE: STATE OF CALIFORNIA, BUILDING CODES DIVISION

HANGER (SUSPENSION) WIRES (FIGURES 5a AND 5b)

- HANGER AND PERIMETER WIRES MUST BE PLUMB WITHIN 1 IN 6 UNLESS (FIGURE 5a) COUNTER SLOPING WIRES ARE PROVIDED (FIGURE 5b). SOURCE: ASTM C 636 SECTION 2.1.4
- HANGER WIRES SHALL BE 12 GAGE AND SPACED 4 FEET ON CENTER. SOURCE: ASTM C636 SECTION 2.1.6, ASTM E580 SECTION 5.2.7.1
- ANY CONNECTION DEVICE AT THE SUPPORTING CONSTRUCTION SHALL BE CAPABLE OF CARRYING NOT LESS THAN 100 LB. SOURCE: CISCA ZONES 3–4
- POWDER ACTUATED FASTENERS (PAFS) ARE AN APPROVED METHOD OF ATTACHMENT FOR HANGER WIRES. SOURCE: ASCE 7–16 13.4.5 EXCEPTION 1 & 2, STATE OF OREGON, BUILDING CODES DIVISION
- TERMINAL ENDS OF EACH MAIN BEAM AND CROSS TEE MUST BE SUPPORTED WITHIN 8 INCHES OF EACH WALL WITH A PERIMETER WIRE OR APPROVED WALL SUPPORT (SEE FIGURE 4a & 5a). SOURCE: ASTM E580 SECTION 5.2.6
- WIRES SHALL NOT ATTACH TO OR BEND AROUND INTERFERING MATERIAL OR EQUIPMENT. A TRAPEZE OR EQUIVALENT DEVICE SHALL BE USED WHERE OBSTRUCTIONS PRECLUDE DIRECT SUSPENSION. TRAPEZE SUSPENSIONS SHALL BE SIZED TO RESIST THE DEAD LOAD AND LATERAL FORCES APPROPRIATE FOR THE SEISMIC CATEGORY. SOURCE: ASTM E580 SECTION 5.2.7.4

ELECTRICAL FIXTURES

- LIGHT FIXTURES WEIGHING LESS THAN 10 LB SHALL HAVE ONE 12 GAGE HANGER WIRE CONNECTED FROM THE FIXTURE TO THE STRUCTURE ABOVE. THIS WIRE MAY BE SLACK. SOURCE: ASTM E580 SECTION 5.3.4
- LIGHT FIXTURES WEIGHING MORE THAN 10 LB AND LESS THAN 56 LB. SHALL HAVE TWO 12 GAGE WIRES ATTACHED AT OPPOSING CORNERS OF THE LIGHT FIXTURE TO THE STRUCTURE ABOVE. THESE WIRES MAY BE SLACK. SOURCE: ASTM E580 SECTION 5.3.5
- LIGHT FIXTURES WEIGHING MORE THAN 56 LB SHALL BE SUPPORTED DIRECTLY FROM THE STRUCTURE ABOVE BY APPROVED HANGERS. SOURCE: ASTM E580 SECTION 5.3.6
- PENDANT–HUNG FIXTURES SHALL BE DIRECTLY SUPPORTED FROM THE STRUCTURE ABOVE USING A 9 GAGE WIRE OR AN APPROVED ALTERNATE SUPPORT WITHOUT USING THE CEILING SUSPENSION SYSTEM FOR DIRECT SUPPORT. SOURCE: ASTM E580 SECTION 5.3.7

LATERAL FORCE BRACING (FIGURES 2 AND 3)

- CEILINGS CONSTRUCTED OF SCREW– OR NAIL–ATTACHED GYPSUM BOARD ON ONE LEVEL THAT ARE SURROUNDED BY AND CONNECTED TO WALLS OR SOFFITS THAT ARE LATERALLY BRACED TO THE STRUCTURE ABOVE ARE EXEMPT FROM SEISMIC DESIGN REQUIREMENTS. SOURCE: ASCE 7–16 SECTION 13.5.6, ASTM E580 SECTION 1.7
- CEILING AREAS OF 1000 FT2 OR LESS SHALL BE EXEMPT FROM LATERAL–FORCE BRACING REQUIREMENTS. SOURCE: ASTM E580 SECTION 1.6
- LATERAL–FORCE BRACING IS THE USE OF VERTICAL STRUTS (COMPRESSION POSTS) AND SPLAY WIRES (SEE FIGURE 2).
- LATERAL FORCE BRACING SHALL BE 12 FEET ON CENTER (MAXIMUM) AND BEGIN NO FARTHER THAN 6 FEET FROM WALLS. SOURCE: ASTM E580 SECTION 5.2.8.2
- SEISMIC SPLAY WIRES ARE TO BE FOUR 12 GAGE WIRES ATTACHED TO THE MAIN BEAM. WIRES ARE ARRAYED 90° FROM EACH OTHER AND AT AN ANGLE NOT EXCEEDING 45° FROM THE PLANE OF THE CEILING. SOURCE: ASTM E580 SECTION 5.2.8.2
- SEISMIC SPLAY WIRES SHALL BE ATTACHED TO THE GRID AND TO THE STRUCTURE IN SUCH A MANNER THAT THEY CAN SUPPORT A MINIMUM DESIGN LOAD OF 200 LB OR THE ACTUAL DESIGN LOAD, WITH A SAFETY FACTOR OF 2, WHICHEVER IS GREATER (FIGURE 6b). SOURCE: CISCA ZONES 3–4
- POWER–ACTUATED FASTENERS IN CONCRETE OR STEEL SHALL NOT BE USED FOR SUSTAINED TENSION LOADS OR FOR BRACE APPLICATIONS IN SEISMIC DESIGN CATEGORIES D, E, OR F UNLESS APPROVED FOR SEISMIC LOADING. POWER–ACTUATED FASTENERS IN MASONRY ARE NOT PERMITTED UNLESS APPROVED FOR SEISMIC LOADING.

  EXCEPTIONS:
  1. POWER–ACTUATED FASTENERS IN CONCRETE, USED FOR SUPPORT OF ACOUSTICAL TILE OR LAY–IN PANEL SUSPENDED CEILING APPLICATIONS AND DISTRIBUTED SYSTEMS WHERE THE SERVICE LOAD AN ANY INDIVIDUAL FASTENER DOES NOT EXCEED 90 LB.

  2. POWER–ACTUATED FASTENERS IN STEEL WHERE THE SERVICE LOAD ON ANY INDIVIDUAL FASTENER DOES NOT EXCEED 250 LB (1.112N). SOURCE: ASCE 7–16 13.4.5
- SPLAY WIRES ARE TO BE WITHIN 2 INCHES OF THE CONNECTION OF THE VERTICAL STRUT TO SUSPENDED CEILING. SOURCE: ASTM E580 SECTION 5.2.8.2
- RIGID BRACING MAY BE USED IN LIEU OF SPLAY WIRES. SOURCE: ASTM E580 5.2.8.4
- CEILINGS WITH PLENUMS LESS THAN 12 INCHES TO STRUCTURE ARE NOT REQUIRED TO HAVE LATERAL–FORCE BRACING. SOURCE: PORTLAND BUILDING DEPARTMENT
- VERTICAL STRUTS MUST BE POSITIVELY ATTACHED TO THE SUSPENSION SYSTEMS AND THE STRUCTURE ABOVE. SOURCE: ASTM E580 SECTION 5.2.8.2
- THE VERTICAL STRUT MAY BE EMT CONDUIT, METAL STUDS OR A PROPRIETARY COMPRESSION POST (SEE FIGURE 3)

WALL MOLDINGS (FIGURES 4a AND 4b)

- WALL MOLDINGS (PERIMETER CLOSURE ANGLES) ARE REQUIRED TO HAVE A HORIZONTAL FLANGE 2 INCHES WIDE. ONE END OF THE CEILING GRID SHALL BE ATTACHED TO THE WALL MOLDING, THE OTHER END SHALL HAVE A 3/4 INCH CLEARANCE FROM THE WALL AND FREE TO SLIDE. SOURCE: ASTM E580 SECTION 5.2.2, SECTION 5.2.3
- WHERE SUBSTANTIATING DOCUMENTATION HAS BEEN PROVIDED TO THE LOCAL JURISDICTION, PERIMETER CLIPS MAY BE SUED TO SATISFY THE REQUIREMENTS FOR THE 2–INCH CLOSURE ANGLE. SOURCE: STATE OF OREGON, BUILDING CODES DIVISION
- PERIMETER SUPPORTING CLIPS SHALL BE ATTACHED TO THE SUPPORTING CLOSURE ANGLE OR CHANNEL WITH A MINIMUM OF TWO SCREWS PER CLIP AND SHALL BE INSTALLED AROUND THE ENTIRE CEILING PERIMETER. SOURCE: ASCE 7–16, SECTION 13.5.6.2.3A
- THE GRID SHALL BE ATTACHED AT TWO ADJACENT WALLS (POP RIVETS OR APPROVED METHOD). SOFFITS EXTENDING TO A POINT AT LEAST LEVEL WITH THE BOTTOM PLANE OF THE GRID AND INDEPENDENTLY SUPPORTED AND LATERALLY BRACED TO THE STRUCTURE ABOVE ARE DEEMED TO BE EQUIVALENT TO WALLS. SOURCE: STATE OF CALIFORNIA BUILDING CODE, (2022 CBC), ASTM E580 SECTION 5.2.3, SECTION 5.2.8.1

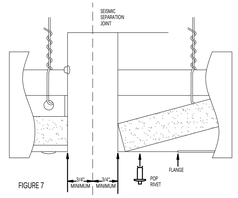

FIGURE 7

SEISMIC SEPARATION JOINTS (FIGURE 7)

- ALL CONTINUOUS CEILING AREAS EXCEEDING 2500 FT2 (232 M2), SHALL HAVE A SEISMIC SEPARATION JOINT, BULKHEAD BRACED TO THE STRUCTURE OR FULL–HEIGHT PARTITION THAT BREAKS THE CEILING INTO AREAS OF NO MORE THAN 2500 FT2 (232 M2) AND A RATIO OF THE LONG TO SHORT DIMENSION LESS THAN OR EQUAL TO FOUR. EACH AREA SHALL BE CAPABLE OF ALLOWING + OR – $\frac{3}{4}$ IN (19 MM) AXIAL MOVEMENT. AREAS SURROUNDED BY BULKHEADS OR FULL HEIGHT PARTITIONS SHALL BE PROVIDED WITH CLOSURE ANGLES. EACH AREA WITH A SEISMIC SEPARATION JOINT, BULKHEAD OR FULL–HEIGHT PARTITION SHALL HAVE HORIZONTAL BRACING OR RESTRAINTS. SOURCE: ASCE 7–16 SECTION 13.5.6.2.2 B, ASTM E580 SECTION 5.2.9.1

MECHANICAL SERVICES

- TERMINALS OR SERVICES WEIGHING LESS THAN 20 LB SHALL BE POSITIVELY ATTACHED TO THE CEILING SUSPENSION MAIN RUNNERS OR TO CROSS RUNNERS THAT HAVE THE SAME CARRYING CAPACITY AS THE MAIN RUNNERS. SOURCE: ASTM E580 SECTION 5.4.1
- TERMINALS OR SERVICES WEIGHING 20 LB BUT NOT MORE THAN 56 LB SHALL HAVE, IN ADDITION TO 5.4.1, TWO 12–GAGE WIRES CONNECTING THEM TO THE CEILING SYSTEM HANGERS OR THE STRUCTURE ABOVE. THESE WIRES MAY BE SLACK. SOURCE: ASTM E580 SECTION 5.4.2
- TERMINALS OR SERVICES WEIGHING MORE THAN 56 LB SHALL BE SUPPORTED DIRECTLY FROM THE STRUCTURE ABOVE BY APPROVED HANGERS SOURCE; ASTM E580 SECTION 5.4.3

SPRINKLERS

FOR CEILING WITHOUT RIGID BRACING, SPRINKLER HEAD PENETRATIONS SHALL HAVE A 2 INCH OVERSIZE RING, SLEEVE OR ADAPTER THROUGH THE CEILING TILE TO ALLOW FREE MOVEMENT OF AT LEAST 1 INCH IN ALL HORIZONTAL DIRECTIONS. FLEXIBLE HEAD DESIGN THAT CAN ACCOMMODATE 1 INCH FREE MOVEMENT SHALL BE PERMITTED AS AN ALTERNATE. SOURCE: ASTM E580 SECTION 5.2.8.5

GLOSSARY FOR THIS DOCUMENT (REGIONAL TERMINOLOGY MAY VARY)

CROSS TEE
THE CROSS MEMBER THAT INTERLOCKS WITH THE MAIN BEAMS, ALSO KNOWN AS A CROSS RUNNER OR CROSS T–BAR.

DIFFUSER
A CIRCULAR OR RECTANGULAR METAL GRILL USED FOR THE PASSAGE OF AIR FROM A DUCTED SYSTEM.

ESSENTIAL SERVICE BUILDINGS
ANY BUILDINGS DESIGNED TO BE USED BY PUBLIC AGENCIES AS A FIRE STATION, POLICE STATION, EMERGENCY OPERATIONS CENTER, STATE PATROL OFFICE, SHERIFF'S OFFICE, OR EMERGENCY COMMUNICATION DISPATCH CENTER.

GRID
THE MAIN BEAMS AND CROSS TEES OF THE SUSPENSION SYSTEM.

HANGER WIRE
10 OR 12 GAGE SOFT ANNEALED WIRE USED AS PRIMARY SUPPORT FOR THE GRID SYSTEM. ALSO CALLED SUSPENSION WIRES.

LATERAL FORCE BRACING
THE BRACING METHOD USED TO PREVENT CEILING UPLIFT OR RESTRICT LATERAL MOVEMENT DURING A SEISMIC EVENT. LATERAL FORCE BRACING CONSISTS OF VERTICAL STRUTS AND SPLAY WIRES.

MAIN BEAM
THE PRIMARY SUSPENSION MEMBER SUPPORTED BY HANGER WIRES, ALSO KNOWN AS THE MAIN RUNNER, CARRYING TEE, CARRYING RUNNER OR MAINS.

MOLDING/CLOSURE ANGLE
A LIGHT GAUGE METAL ANGLE OR CHANNEL FASTENED TO THE PERIMETER WALL OR PARTITION TO SUPPORT THE PERIMETER ENDS OF AN ACOUSTICAL CEILING GRID

PERIMETER CLIPS
PROPRIETARY ANGLE BRACKET ATTACHED DIRECTLY TO THE WALL MOLDING/CLOSURE ANGLE WHICH ALLOWS FOR 3/4" MOVEMENT IN THE EVENT OF SEISMIC ACTIVITY AND INTERLOCKS PROPERLY WITH ENDS OF GRID SYSTEM.

PERIMETER WIRES
A HANGER WIRES PLACED WITHIN EIGHT INCHES OF THE SURROUNDING WALLS.

PLENUM
THE SPACE ABOVE A SUSPENDED CEILING.

SLACK WIRE
A 12 GAGE WIRE THAT IS NOT TIGHT OR TAUT.

SPREADER OR SPACER BAR
A BAR WITH NOTCHES TO PREVENT THE SUSPENSION SYSTEM FROM SEPARATING, ALSO CALLED A STABILIZER BAR.

SPLAY WIRES
WIRES INSTALLED AT AN ANGLE RATHER THAN PERPENDICULAR TO THE GRID.

VERTICAL STRUTS
THE RIGID VERTICAL MEMBER USED IN LATERAL FORCE BRACING OF THE SUSPENSION SYSTEM. ALSO KNOWN AS A COMPRESSION POSTS, SEISMIC PODS, SEISMIC STRUTS. COMMON MATERIALS ARE ELECTRICAL CONDUIT (EMT), METAL STUDS OR PROPRIETARY PRODUCTS.

SUSPENDED CEILING DETAILS
N.T.S. | 2

ARCHITECT:

DAVID SCOTT WINDLE, AIA

6201 CAMPUS CIRCLE DRIVE E.
IRVING, TEXAS 75038
TEL: 972.870.1288
WWW.IDSTUDIO4.COM
E-MAIL scottw@idstudio4.com

CORPORATE:
BRINKER RESTAURANT CORPORATION, A VIRGINIA CORPORATION
3000 OLYMPUS BLVD.
DALLAS, TEXAS 75019
972.980.9917
www.brinker.com

09/23/2024
ISSUE FOR BID
THESE DOCUMENTS ARE FOR BIDDING PURPOSES ONLY. DO NOT USE FOR CONSTRUCTION.

RESTAURANT #CH1679
PROTOTYPE 18.5FS

CHILI'S TOOELE
951 N MAIN STREET
TOOELE, UT 84074

CLIENT: BRINKER RESTAURANT CORP. A VIRGINIA CORPORATION

DATE	DESCRIPTION
6/27/2024	ISSUE FOR PERMIT
9/23/2024	ISSUE FOR BID

#	DATE	DESCRIPTION
1	08.07.2024	CITY COMMENTS

PROJECT NUMBER:
CHI24007

SHEET TITLE:
DETAILS

SHEET NUMBER:
A122

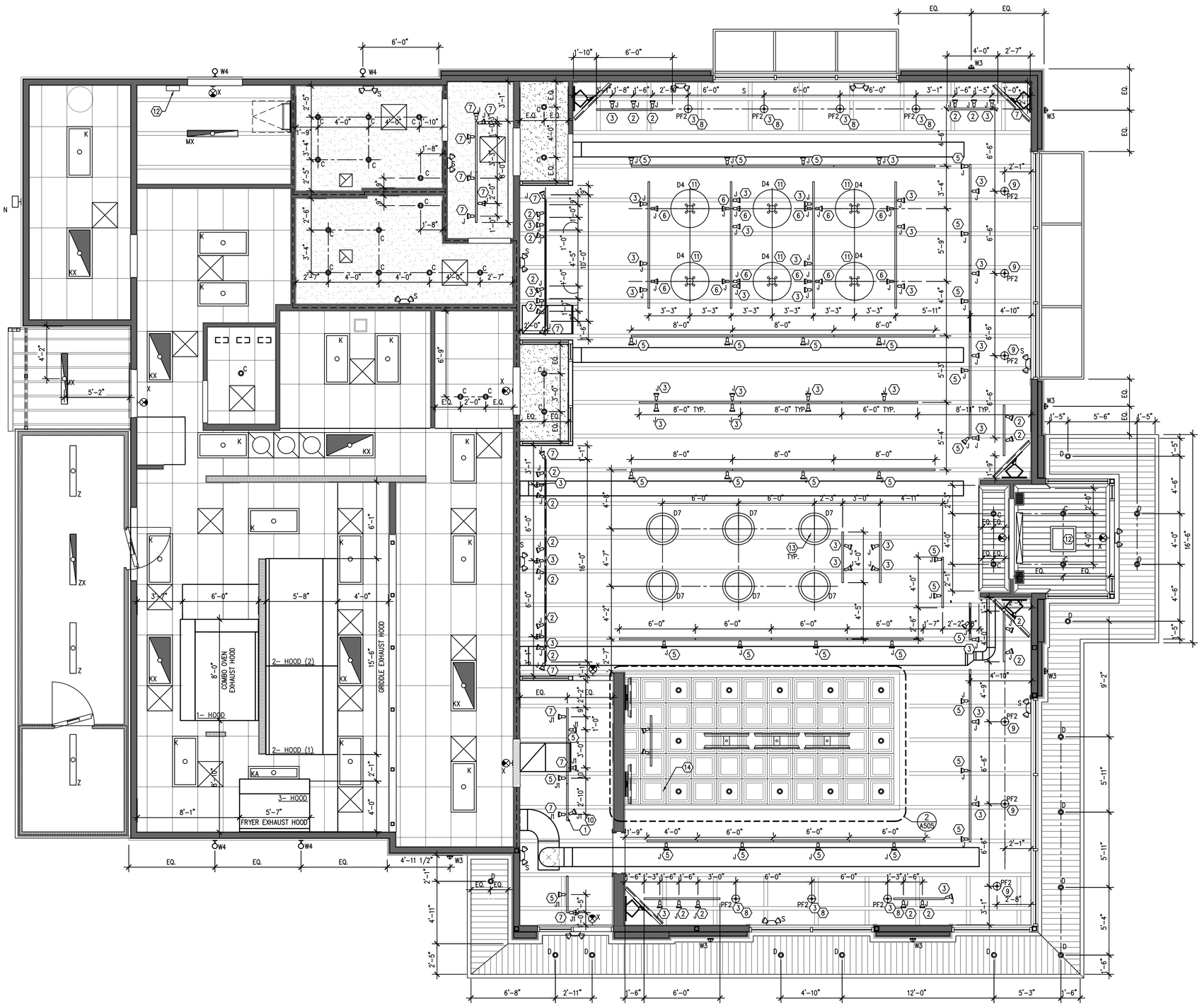

GENERAL NOTES	
1	REFERENCE TO ELECTRICAL FOR LIGHT FIXTURE SCHEDULE.
2	12", 18", 24", 36" DESIGNATIONS NEXT TO "J" LIGHTS INDICATES WAND LENGTH. IF NO WAND LENGTH DESIGNATED THEN "J" LIGHT IS TO BE MOUNTED DIRECTLY TO TRACK.
3	TYPE "S" FIXTURE MOUNTING AT DINING ROOM WALLS: MOUNT BOTTOM OF "S" FIXTURE AT 11'-3".
4	TYPE "S" FIXTURE MOUNTING ON GYPSUM BOARD CEILINGS: MOUNT "S" FIXTURE TO BOTTOM OF CEILING USING RECESSED J-BOX.
5	TYPE "S" FIXTURE MOUNTING ON DINING ROOM EXPOSED CEILING: MOUNT "S" FIXTURE TO BOTTOM OF TRUSS; CONCEAL CONDUIT ALONG TOP OF BOTTOM CHORD OF TRUSS.
6	REFERENCE ROOF PLAN A141 FOR ADDITIONAL EXTERIOR LIGHTING.

#	KEY NOTES
1	TRACK TO BE SUSPENDED AS HIGH AS POSSIBLE UNDER HVAC DUCTWORK.
2	DIRECT LIGHT FIXTURE TO SHINE AT WALL DECOR.
3	DIRECT LIGHT FIXTURE TO SHINE AT CENTER OF TABLE.
4	DIRECT LIGHT FIXTURE TO SHINE AT CENTERLINE OF BARTOP.
5	DIRECT LIGHT FIXTURE TO SHINE AT FLOOR.
6	DIRECT LIGHT FIXTURE AT TOP OF D4 FIXTURE.
7	DIRECT LIGHT FIXTURE TO SHINE AT WALL.
8	PF2 LIGHT FIXTURE MOUNTED AT 5'-6" AFF. RE: 2/A131 FOR MOUNTING
9	PF2 LIGHT FIXTURE MOUNTED AT 7'-0" AFF. (CENTER ON TABLE BELOW) RE: 2/A131 FOR MOUNTING
10	DIRECT LIGHT FIXTURE TO SHINE AT COUNTERTOP.
11	D4 LIGHT FIXTURE MOUNTED AT 8'-6" AFF. RE: 2/A131 FOR MOUNTING
12	ELECTRIC UNIT HEATER MOUNTED. RE: M101
13	D6 – 36" DIA. CUSTOM DECORATIVE LIGHTING (SURFACE MOUNTED) BY OWNER
14	RECESSED CAN TO BE CENTERED IN CEILING TILE, TYPICAL.

LIGHTING LOCATION PLAN
1/4"=1'-0"

1

ARCHITECT:

DAVID SCOTT WINDLE, AIA

6201 CAMPUS CIRCLE DRIVE E.
IRVING, TEXAS 75038
TEL: 972.870.1288
WWW.IDSTUDIO4.COM
E-MAIL scottw@idstudio4.com

CORPORATE:
BRINKER RESTAURANT CORPORATION,
A VIRGINIA CORPORATION
3000 OLYMPUS BLVD.
DALLAS, TEXAS 75019
972.980.9917
www.brinker.com

09/23/2024

ISSUE FOR BID

THESE DOCUMENTS ARE FOR BIDDING PURPOSES ONLY. DO NOT USE FOR CONSTRUCTION.

RESTAURANT #CH1679
PROTOTYPE 18.5FS

CHILI'S TOOELE
951 N MAIN STREET
TOOELE, UT 84074

CLIENT: BRINKER RESTAURANT CORP.
A VIRGINIA CORPORATION

DATE	DESCRIPTION
6/27/2024	ISSUE FOR PERMIT
9/23/2024	ISSUE FOR BID

△	DATE	DESCRIPTION

PROJECT NUMBER:
CHI24007

SHEET TITLE:
LIGHTING LOCATION PLAN

SHEET NUMBER:
A131

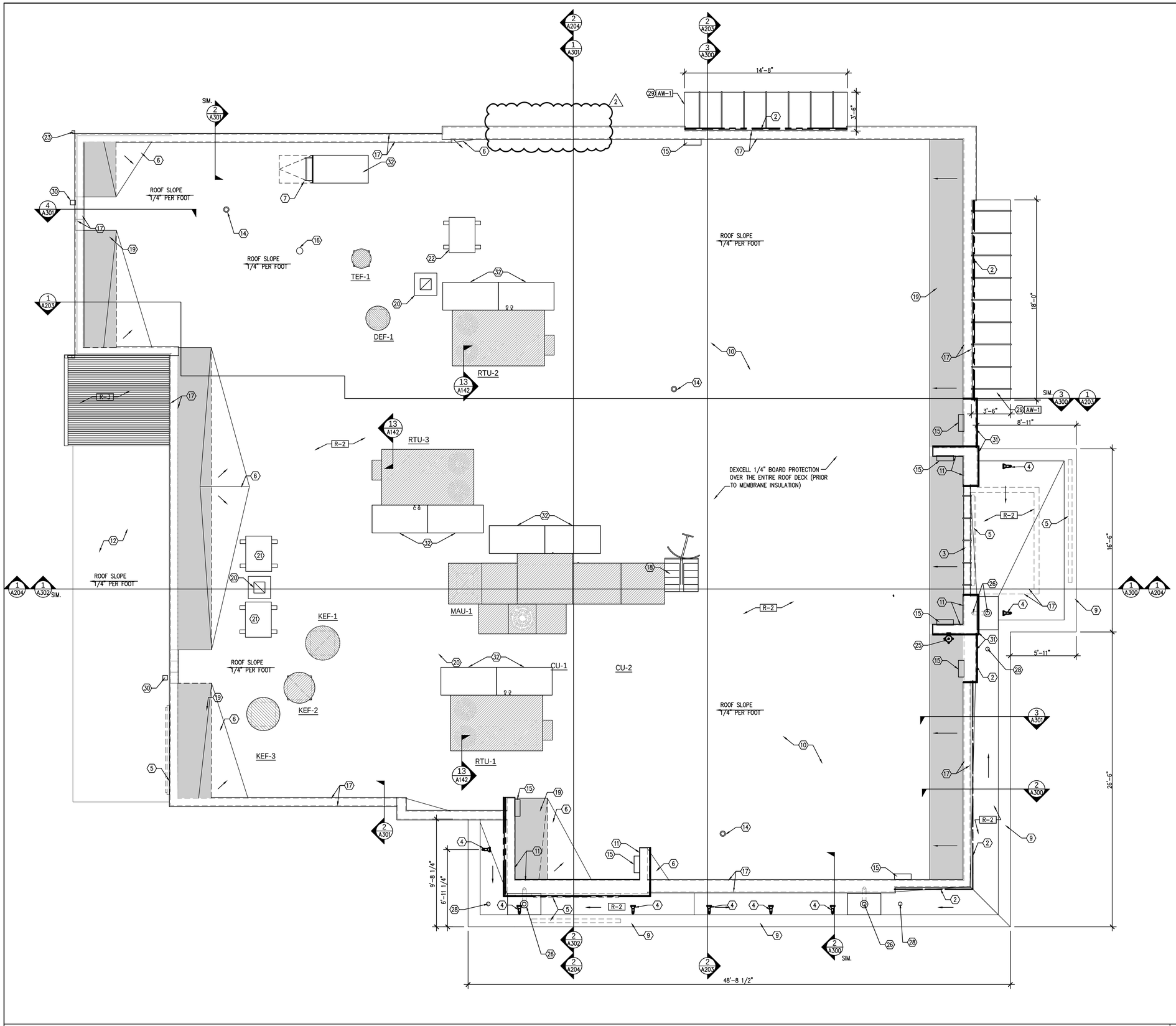

ROOF PLAN
1/4"=1'-0"

1

GENERAL NOTES

1	CONTRACTOR TO PROVIDE RAILS FOR MOUNTING THE COOLER/FREEZER AND ICE MACHINE CONDENSER RACKS – COORDINATE EXACT LENGTHS AND SPACING WITH THE EQUIPMENT SUPPLIER, RE: 6/A142. NOTE: (FLORIDA PROJECTS) PROVIDE ALUMINUM STAND MANUFACTURER: PRECISION ALUMINUM PRODUCTS 954–480–6919. RE: 14–17/A142
2	SIREN TO BE MOUNTED ON PARAPET WALL SO AS NOT TO BE VISIBLE FROM THE GROUND, NIC.
3	ROOFING CONTRACTOR TO COORDINATE AND PROVIDE ROOF PENETRATION.
4	GAS LINES TO BE PAINTED EP–1 OR PER AHJ REQUIREMENTS.
5	ALL ELECTRICAL FOR ROOFTOP EQUIPMENT SHALL ROUTE THROUGH CURBS (NOT ROOF).
6	CUT OUT INSULATION FOR ELECTRICAL CONDUITS.
7	ATR HUB SHALL BE INSTALLED AROUND REFRIGERATION LINES.
8	ALL CAP FLASHING CORNERS SHALL BE SOLDERED.
9	REFER TO ELECTRICAL DRAWINGS FOR ADDITIONAL ROOF LIGHTING NOTES.
10	GENERAL CONTRACTOR TO QUOTE SINGLE – SKIRT METAL FLANGE SCUPPERS.
11	STACK FLASHINGS TO BE USED AROUND ALL PIPE PENETRATIONS, EXCEPT IF AN ATR HUB WAS USED.
12	ALL EQUIPMENT WILL BE WRAPPED WITH CUSTOM CURB FLASHINGS. THE LARGER CURB FLASHINGS TO USE OPEN SKIRTS.

KEY NOTES

#	
1	CRICKET, TYPICAL.
2	LED TAPE LIGHT BY CONTRACTOR, RE: ELECTRICAL
3	METAL ROOFING
4	LIGHT FIXTURE, RE: ELECTRICAL DRAWINGS AND 9/A142.
5	SIGNAGE, NIC.
6	TAPERED INSULATION AT 1/4" PER FOOT, TYPICAL.
7	ROOF LADDER, RE: 5/A142 AND 10/A142.
8	T – OUTDOOR LED WALL LIGHT, RE: ELECTRICAL AND ELEVATIONS
9	CANOPY BY CONTRACTOR.
10	DURO–LAST TWO–WAY AIR VENT INSTALLED FOR EVERY 1,000 SQ FT OF ROOF AREA (4 TOTAL), RE: 11/A142
11	DURO–LAST ROOFING ON BACKSIDE OF PARAPETS TO BE DURO–TUFF COLOR "CHARCOAL GRAY" SINGLE PLY 50 MIL, PROVIDE INSULATION.
12	WALK–IN COOLER DURO–LAST ROOF "CHARCOAL GRAY", INSTALLED BY CONTRACTOR.
13	NOT USED.
14	PLUMBING VENT, RE: 4/A142 AND PLUMBING DRAWINGS
15	MOUNTING BRACKET FOR ELECTRIC J–BOX (BY GENERAL CONTRACTOR) AND TRANSFORMER (BY SIGN VENDOR) FOR LIGHTING. RE: 7/A142 FOR CONDUIT PENETRATIONS THRU PARAPET AND ELECTRICAL. ELECTRIC CONDUIT TO BE ROUTED AND CONCEALED INSIDE PARAPET WALL.
16	WATER HEATER FLUES, RE: PLUMBING DRAWINGS
17	LINE OF BUILDING BELOW.
18	SATELLITE DISH, NON–PENETRATION ROOF MOUNT, AND BALLAST (NIC) CABLE TO BE ON SURFACE OF ROOF ROUTED THRU ATR HUB FOR ICE MAKER CONDENSERS.
19	KICKER, RE: STRUCTURAL.
20	ATR HUB, RE: 8/A142.
21	FREEZER AND COOLER CONDENSERS, RE: 6/A142.
22	ICE MAKER CONDENSERS, RE: 6/A142.
23	DOWNSPOUT AND GUTTER, RE: 1 AND 2/A142.
24	NOT USED.
25	SIREN, RE: ELECTRICAL.
26	ROOF DRAIN RE: 3/A142. ROUTE LEADER DOWN THRU TILE WALL. RE: 18/A305
27	NOT USED.
28	OVERFLOW ROOF DRAIN DAYLIGHTS OUT OF THE BOTTOM OF THE CANOPY SOFFIT PER DETAIL 3/A142.
29	AWNING BELOW, TYPICAL, RE: 3 AND 4/A203.
30	ROOF LEADER
31	LIGHTING (F2) BY SIGN CONTRACTOR, RE: ELECTRICAL
32	PROVIDE 30 X 60 WALKPAD AT MAINTENANCE ACCESS PANEL LOCATION. REF 18/A142. (TYP.)

ARCHITECT:

DAVID SCOTT WINDLE, AIA

6201 CAMPUS CIRCLE DRIVE E.
IRVING, TEXAS 75038
TEL: 972.870.1288
WWW.IDSTUDIO4.COM
E-MAIL scottw@idstudio4.com

CORPORATE:
BRINKER RESTAURANT CORPORATION,
A VIRGINIA CORPORATION
3000 OLYMPUS BLVD.
DALLAS, TEXAS 75019
972.980.9917
www.brinker.com

09/23/2024
ISSUE FOR BID
THESE DOCUMENTS ARE FOR BIDDING PURPOSES ONLY. DO NOT USE FOR CONSTRUCTION.

RESTAURANT #CH1679
PROTOTYPE 18.5FCS

CHILI'S TOOELE
951 N MAIN STREET
TOOELE, UT 84074

CLIENT: BRINKER RESTAURANT CORP.
A VIRGINIA CORPORATION

DATE	DESCRIPTION
6/27/2024	ISSUE FOR PERMIT
9/23/2024	ISSUE FOR BID

	DATE	DESCRIPTION
2	08.23.2024	OWNER COMMENTS

PROJECT NUMBER:
CHI24007

SHEET TITLE:
ROOF PLAN

SHEET NUMBER:
A141

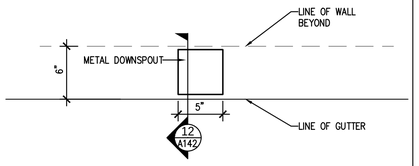

GUTTER PLAN 1 — 1 1/2"=1'-0"

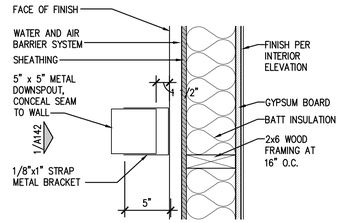

DOWNSPOUT PLAN 2 — 1 1/2"=1'-0"

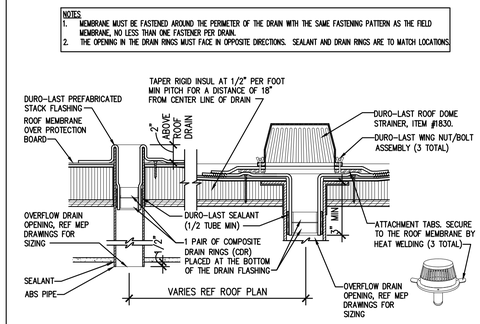

ROOF DRAIN AND OVERFLOW SECTION 3 — 1 1/2"=1'-0"

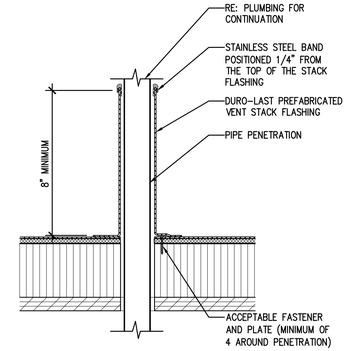

PENETRATION DETAIL 4 — 3"=1'-0"

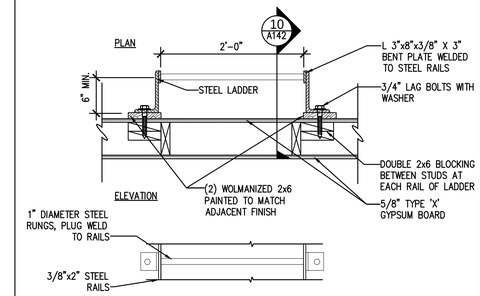

ROOF LADDER PLAN/ELEVATION 5 — 1"=1'-0"

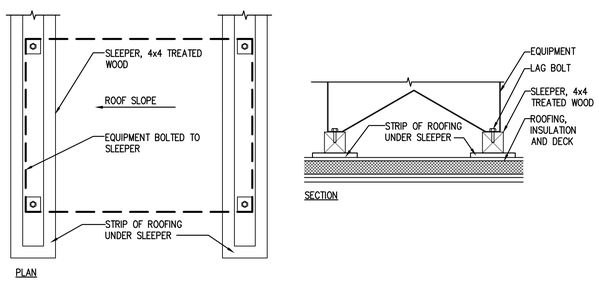

ROOF SLEEPER DETAIL 6 — 1"=1'-0"

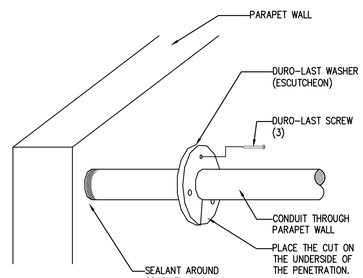

NOTE: APPLY SEALANT ON ENTIRE BACK SIDE OF ESCUTCHEON WASHER PRIOR TO INSTALLATION. SEAL AROUND CONDUIT BEFORE AND AFTER ESCUTCHEON INSTALLATION. FINALLY, SEAL AROUND THE OUTSIDE OF THE ESCUTCHEON WASHER AND THE SLICE. THIS DETAIL ACCEPTABLE ONLY ON VERTICAL SURFACES THAT ARE 8" OR MORE ABOVE THE ROOF DECK.

CONDUIT WASHER NTS 7

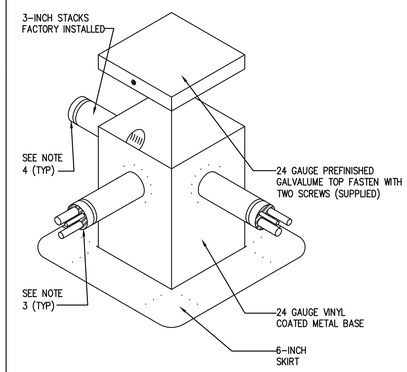

NOTES:
1. ATTACH ATR HUB WITH APPROVED DURO-LAST FASTENERS, MINIMUM ONE PER SIDE, OR 18-INCHES ON-CENTER THRU THE BOTTOM FLANGE.
2. WELD THE 6-INCH SKIRT TO THE DECK SHEET MEMBRANE.
3. USE DURO-LAST SEALANT AT ENTRY POINTS TO ENSURE A WATERTIGHT SEAL
4. USE STAINLESS STEEL BANDS ON ROUND STACKS AND TIGHTEN TAKING CARE NOT TO CRUSH THE WIRE, CONDUIT, CONDENSER LINE OR OBJECT GOING THRU THE STACK FLASHING
5. SECURE PREFINISHED TOP WITH THE TWO SUPPLIED SCREWS
6. TO SEAL UNUSED STACKS PINCH THE END TOGETHER AND WELD CLOSED WHEN NEEDED CUT THE WELDED PORTION OFF AND RE-USE ACCORDINGLY
7. 8x8x8 1/2"

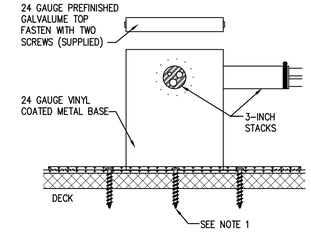

ATR HUB NTS 8

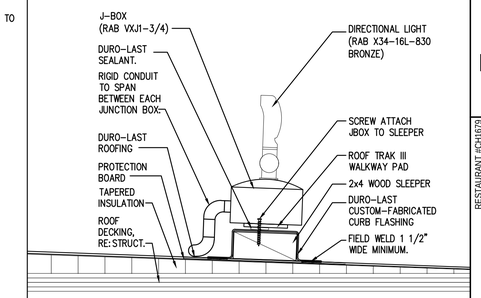

EXTERIOR DIRECTIONAL LIGHT 9 — 3"=1'-0"

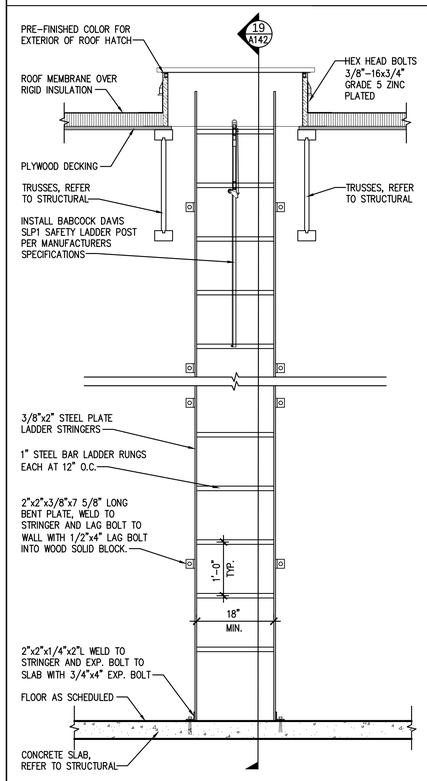

ROOF LADDER 10 — 3/4"=1'-0"

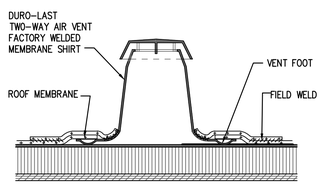

TWO-WAY AIR VENT 11 — 1 1/2"=1'-0"

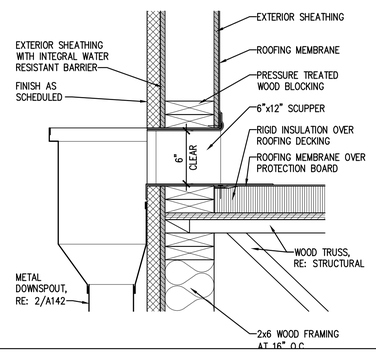

SCUPPER DETAIL 12 — 1 1/2"=1'-0"

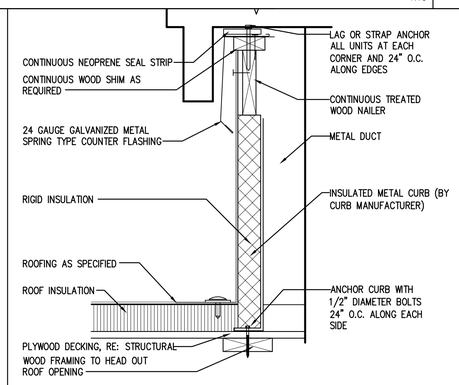

RTU CURB DETAIL 13 — 1 1/2"=1'-0"

NOT USED 14 — 1/2"=1'-0"

NOT USED 15 — 1"=1'-0"

NOT USED 16 — 6"=1'-0"

NOT USED 17 — 6"=1'-0"

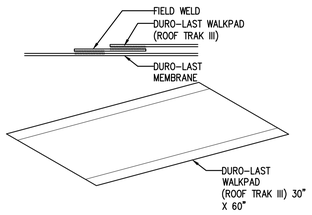

WALKPAD N.T.S. 18

ARCHITECT:
DAVID SCOTT WINDLE, AIA
6201 CAMPUS CIRCLE DRIVE E.
IRVING, TEXAS 75038
TEL: 972.870.1288
WWW.IDSTUDIO4.COM
E-MAIL scottw@idstudio4.com

CORPORATE:
BRINKER RESTAURANT CORPORATION, A VIRGINIA CORPORATION
3000 OLYMPUS BLVD.
DALLAS, TEXAS 75019
972.980.9917
www.brinker.com

09/23/2024
ISSUE FOR BID
THESE DOCUMENTS ARE FOR BIDDING PURPOSES ONLY. DO NOT USE FOR CONSTRUCTION.

RESTAURANT #CH1679
PROTOTYPE 18.5FS

CHILI'S TOOELE
951 N MAIN STREET
TOOELE, UT 84074

CLIENT: BRINKER RESTAURANT CORP.
A VIRGINIA CORPORATION

DATE	DESCRIPTION
6/27/2024	ISSUE FOR PERMIT
9/23/2024	ISSUE FOR BID

DATE	DESCRIPTION

PROJECT NUMBER:
CHI24007

SHEET TITLE:
ROOF DETAILS

SHEET NUMBER:
A142

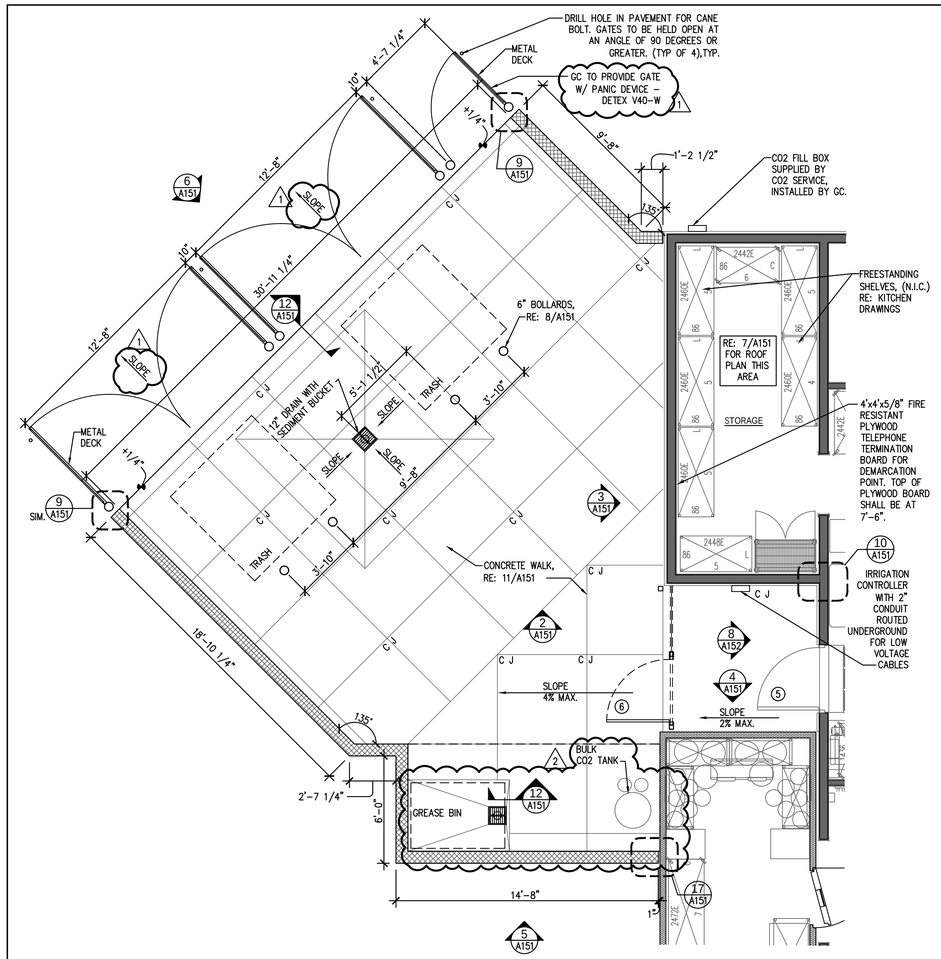

SERVICE YARD / STORAGE ROOM PLAN 1/4"=1'-0" | 1

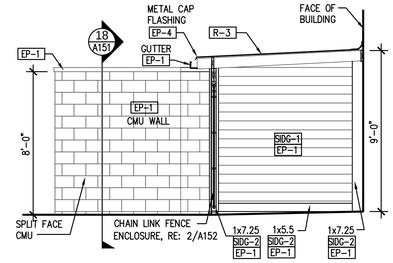

ELEVATION 1/4"=1'-0" | 2

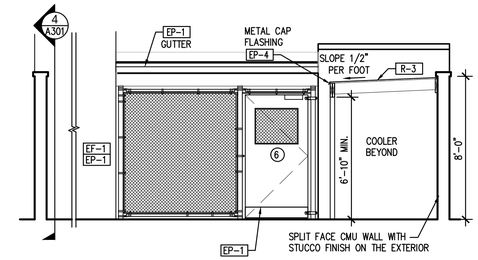

ELEVATION 1/4"=1'-0" | 3

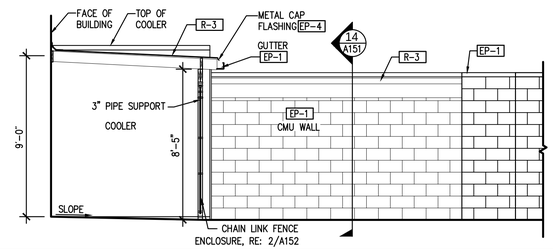

ELEVATION 1/4"=1'-0" | 4

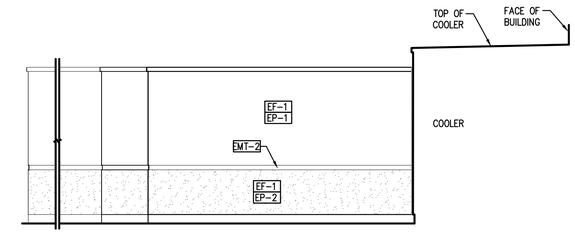

ELEVATION 1/4"=1'-0" | 5

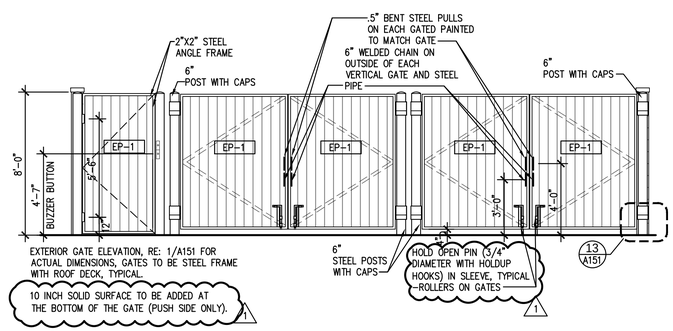

ELEVATION 1/4"=1'-0" | 6

NOT USED 1/4"=1'-0" | 7

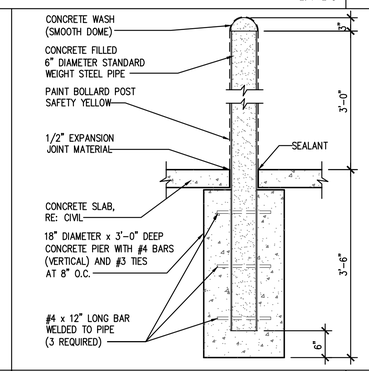

BOLLARD DETAIL 3/4"=1'-0" | 8

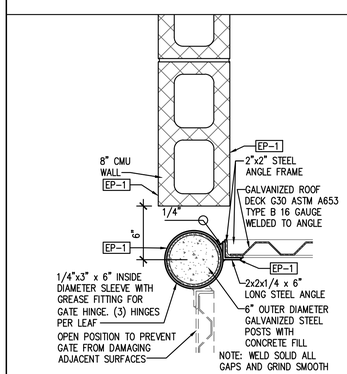

GATE HINGE PLAN 1 1/2"=1'-0" | 9

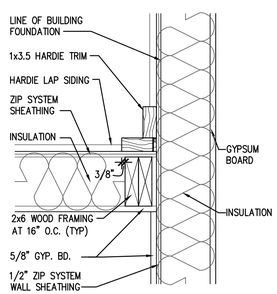

LAP SIDING AND EIFS PLAN DETAIL 1 1/2"=1'-0" | 10

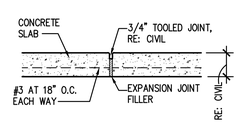

CONCRETE PAVING 1"=1'-0" | 11

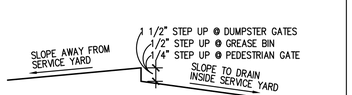

CONCRETE STEP UP 1 1/2"=1'-0" | 12

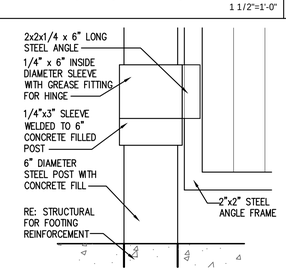

GATE HINGE ELEVATION 1 1/2"=1'-0" | 13

NOT USED 3"=1'-0" | 14

NOT USED 1-1/2"=1'-0" | 15

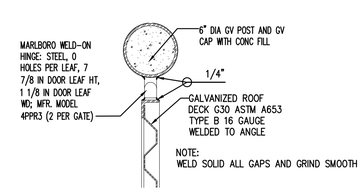

MAN GATE BULLET HINGE DETAIL 1 1/2"=1'-0" | 16

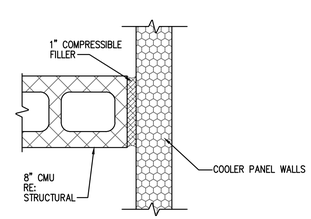

PLAN DETAIL 1 1/2"=1'-0" | 17

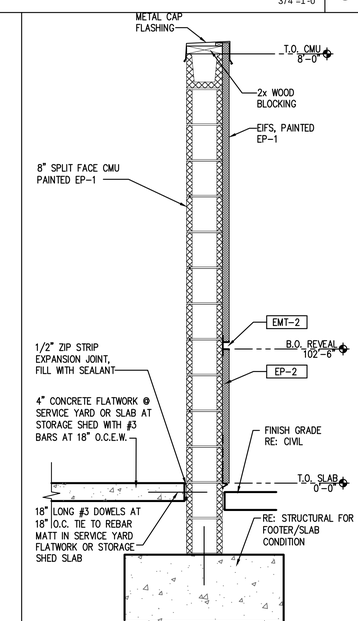

CMU WALL SECTION 3/4"=1'-0" | 18

ARCHITECT:

DAVID SCOTT WINDLE, AIA

6201 CAMPUS CIRCLE DRIVE E.
IRVING, TEXAS 75038
TEL: 972.870.1288
WWW.IDSTUDIO4.COM
E-MAIL scottw@idstudio4.com

CORPORATE:
BRINKER RESTAURANT CORPORATION,
A VIRGINIA CORPORATION
3000 OLYMPUS BLVD.
DALLAS, TEXAS 75019
972.980.9917
www.brinker.com

09/23/2024
ISSUE FOR BID
THESE DOCUMENTS ARE FOR BIDDING PURPOSES ONLY. DO NOT USE FOR CONSTRUCTION.

RESTAURANT #CH1679
PROTOTYPE 18.5FS

CHILI'S TOOELE
951 N MAIN STREET
TOOELE, UT 84074

CLIENT: BRINKER RESTAURANT CORP.
A VIRGINIA CORPORATION

DATE	DESCRIPTION
6/27/2024	ISSUE FOR PERMIT
9/23/2024	ISSUE FOR BID

#	DATE	DESCRIPTION
1	06.07.2024	CITY COMMENTS
2	08.23.2024	OWNER COMMENTS

PROJECT NUMBER:
CHI24007

SHEET TITLE:
CMU SERVICE YARD PLAN AND DETAILS

SHEET NUMBER:
A151

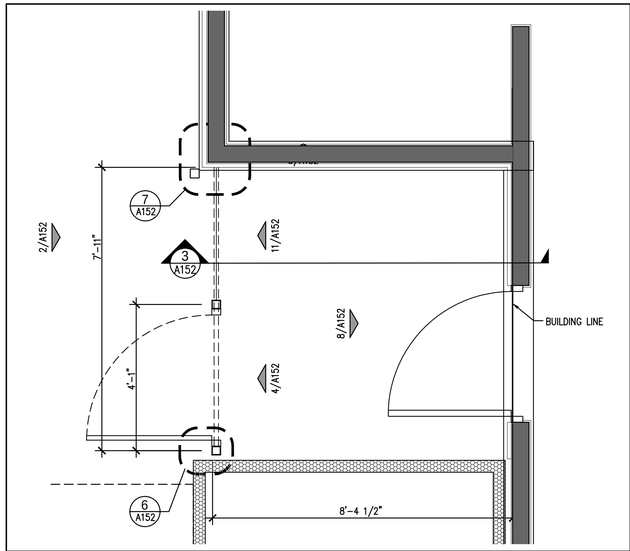

SECURITY CAGE PLAN 1
1/2"=1'-0"

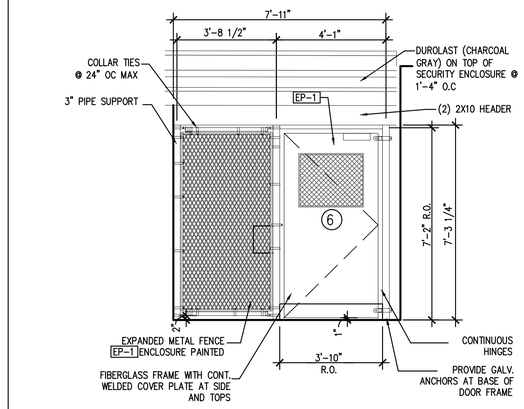

ELEVATION 2
3/8"=1'-0"

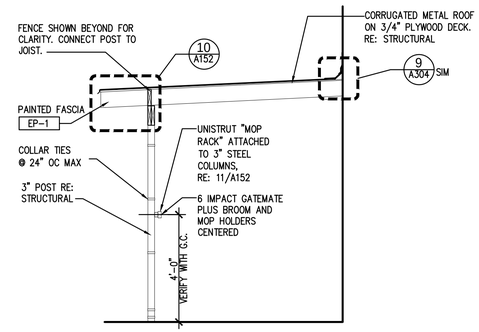

SECTION 3
3/8"=1'-0"

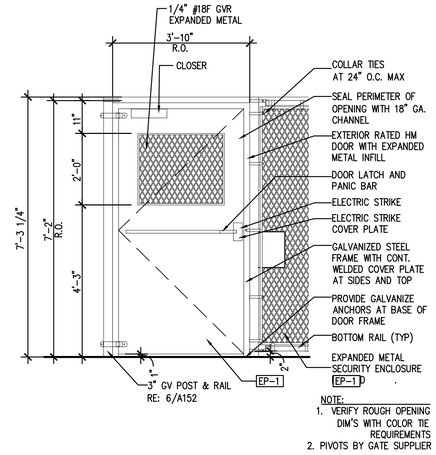

NOTE:
1. VERIFY ROUGH OPENING DIM'S WITH COLOR TIE REQUIREMENTS
2. PIVOTS BY GATE SUPPLIER

SECURITY DOOR 4
1/2"=1'-0"

ELEVATION 5
3/8"=1'-0"

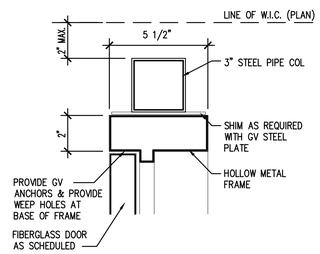

SECURITY DOOR HEAD AND JAMB 6
3"=1'-0"

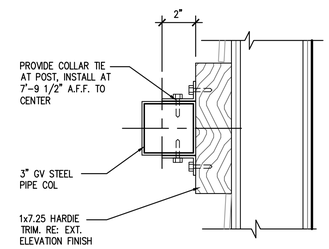

SECURITY CAGE - ATTACH TO STRUCTURE 7
3"=1'-0"

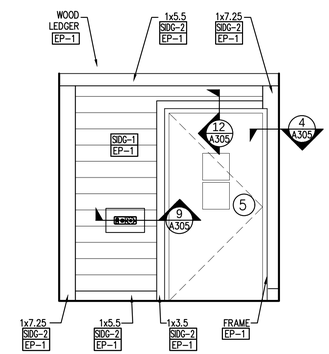

ELEVATION 8
3/8"=1'-0"

NOT USED 9

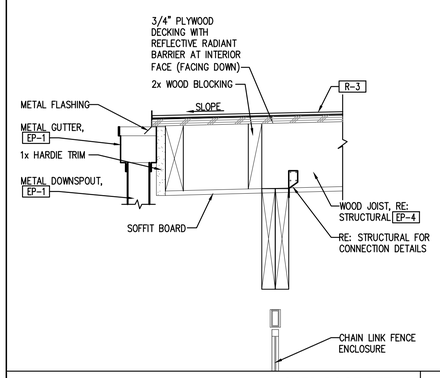

SHED ROOF DETAIL 10
1 1/2"=1'-0"

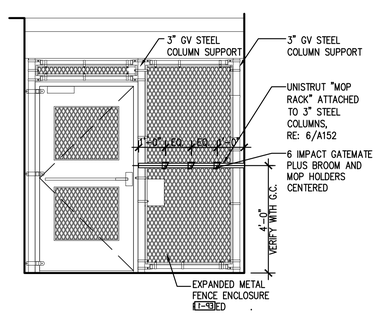

ELEVATION 11
3/8"=1'-0"

ARCHITECT:

DAVID SCOTT WINDLE, AIA

6201 CAMPUS CIRCLE DRIVE E.
IRVING, TEXAS 75038
TEL: 972.870.1288
WWW.IDSTUDIO4.COM
E-MAIL scottw@idstudio4.com

CORPORATE:
BRINKER RESTAURANT CORPORATION, A VIRGINIA CORPORATION
3000 OLYMPUS BLVD.
DALLAS, TEXAS 75019
972.980.9917
www.brinker.com

09/23/2024
ISSUE FOR BID
THESE DOCUMENTS ARE FOR BIDDING PURPOSES ONLY. DO NOT USE FOR CONSTRUCTION.

RESTAURANT #CH1679
PROTOTYPE 18.5FS

CHILI'S TOOELE
951 N MAIN STREET
TOOELE, UT 84074

CLIENT: BRINKER RESTAURANT CORP. A VIRGINIA CORPORATION

DATE	DESCRIPTION
6/27/2024	ISSUE FOR PERMIT
9/23/2024	ISSUE FOR BID

△	DATE	DESCRIPTION

PROJECT NUMBER:
CHI24007

SHEET TITLE:
SERVICE YARD SECURITY CAGE ELEVATIONS AND DETAILS

SHEET NUMBER:
A152

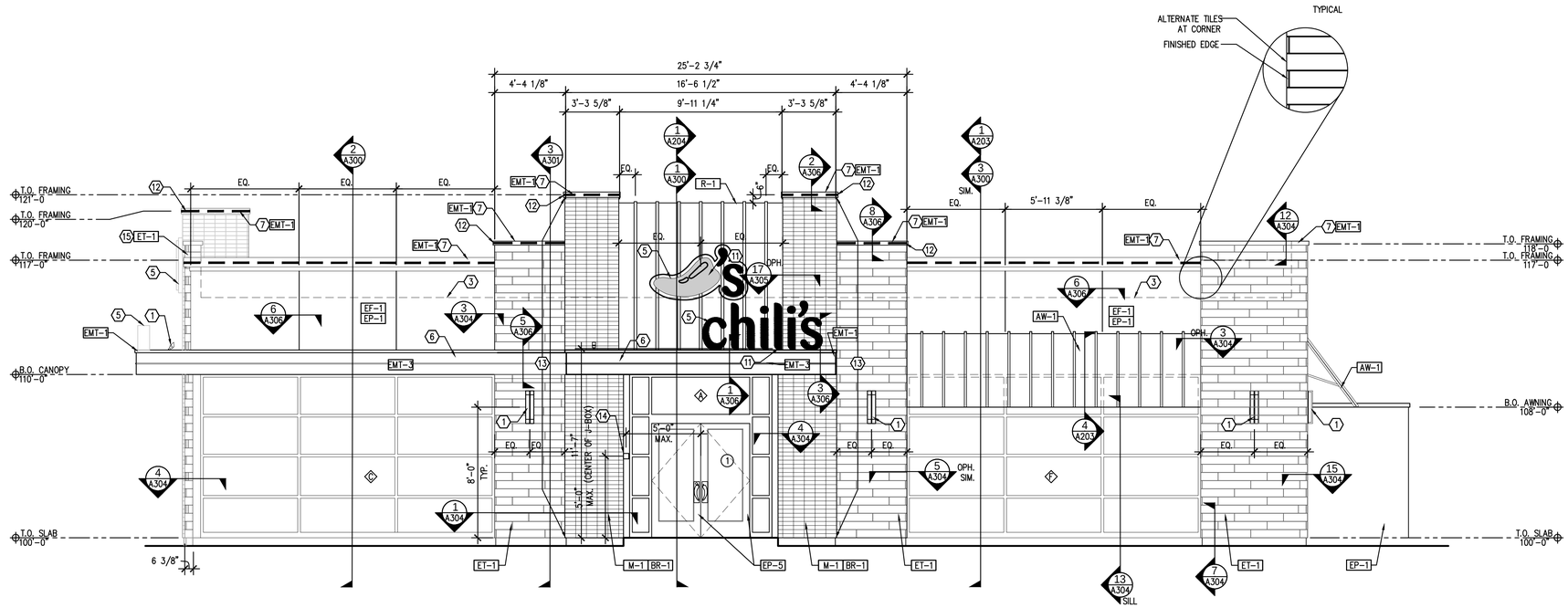

FRONT (EAST) ELEVATION
1/4"=1'-0" 1

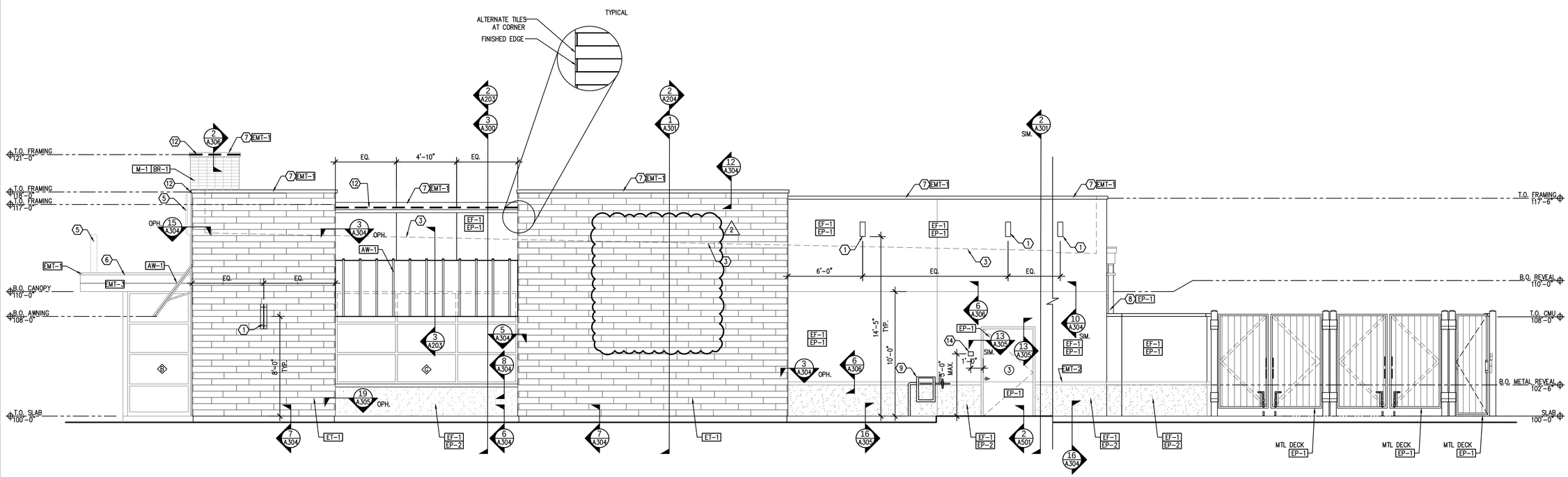

RIGHT (NORTH) ELEVATION
1/4"=1'-0" 2

KEY NOTES:

1	LIGHT FIXTURE, TYPICAL, RE: ELECTRICAL.
2	COOLER IS NOT PREFINISHED BY MANUFACTURE.
3	LINE OF ROOF DECK BEYOND
4	ROOFING MEMBRANE BEYOND, RE: A141, COLOR 'CHARCOAL GRAY'
5	SIGNAGE, NOT IN CONTRACT. RE; ELECTRICAL FOR POWER SUPPLY
6	CANOPY BY G.C.
7	METAL CAP. PREFINISHED BLACK
8	GUTTER AND DOWNSPOUT. PAINT DOWNSPOUT TO BLEND W/ BACKGROUND. RE: 1/A142 AND 2/A142.
9	PAINT GAS LINE TO MATCH ADJACENT WALL FINISH. RE: CIVIL AND MPE101 FOR ADDITIONAL INFORMATION.
10	DASHED LINES INDICATE ROOF TOP EQUIPMENT BEYOND.
11	J-BOX BEYOND, RE: ELECTRICAL.
12	LED LIGHTING
13	BRICK TILE CORNER TO BE USED AT CORNER CONDITION AS PER PLAN DETAIL.
14	KNOX BOX 3200 SERIES. MOUNT NO LOWER THAN 5'-0" AND NO HIGHER THAN 6'-0" A.F.F., VERIFY FINAL LOCATION WITH FIRE MARSHAL PRIOR TO INSTALL
15	WRAP FINISH TO BACK EDGE OF PARAPET

EXTERIOR FINISH SCHEDULE

EXTERIOR TILE	
ET-1	CEDAR ROUGH CUT WOODSTONE
BRICK	
BR-1	BURGUNDY
MORTAR	
M-1	IRON BLACK
FINISH	
EF-1	EIFS
EXTERIOR PAINTS AND STAINS	
EP-1	ANONYMOUS
EP-2	CANYON CLAY
EP-4	TRICORN BLACK
EP-5	SALUTE RED
METAL TRIM	
EMT-1	EDGE TRIM
EMT-2	METAL REVEAL
EMT-3	FASCIA COVER
EMT-4	METAL REVEAL
ROOFING	
R-1	STANDING SEAM METAL
R-2	DUROLAST SINGLE PLY ROOFING
R-3	CORRUGATED METAL ROOFING
AWNING	
AW-1	STANDING SEAM METAL
WOOD PANELING	
EWD-5	CUSTOM EXTERA CORE RED OAK VENEER PANEL

NOTE: FOR COMPLETE SPECIFICATIONS OF FINISHES, REFER TO SHEET A002.

ARCHITECT:

DAVID SCOTT WINDLE, AIA

6201 CAMPUS CIRCLE DRIVE E.
IRVING, TEXAS 75038
TEL: 972.870.1288
WWW.IDSTUDIO4.COM
E-MAIL scottw@idstudio4.com

CORPORATE:
BRINKER RESTAURANT CORPORATION,
A VIRGINIA CORPORATION
3000 OLYMPUS BLVD.
DALLAS, TEXAS 75019
972.980.9917
www.brinker.com

09/23/2024
ISSUE FOR BID
THESE DOCUMENTS ARE FOR BIDDING PURPOSES ONLY. DO NOT USE FOR CONSTRUCTION.

RESTAURANT #CH1679
PROTOTYPE 18.5FS

CHILI'S TOOELE
951 N MAIN STREET
TOOELE, UT 84074

CLIENT: BRINKER RESTAURANT CORP.
A VIRGINIA CORPORATION

DATE	DESCRIPTION
6/27/2024	ISSUE FOR PERMIT
9/23/2024	ISSUE FOR BID

	DATE	DESCRIPTION
2	08.23.2024	OWNER COMMENTS

PROJECT NUMBER:
CHI24007

SHEET TITLE:
EXTERIOR ELEVATIONS

SHEET NUMBER:
A201

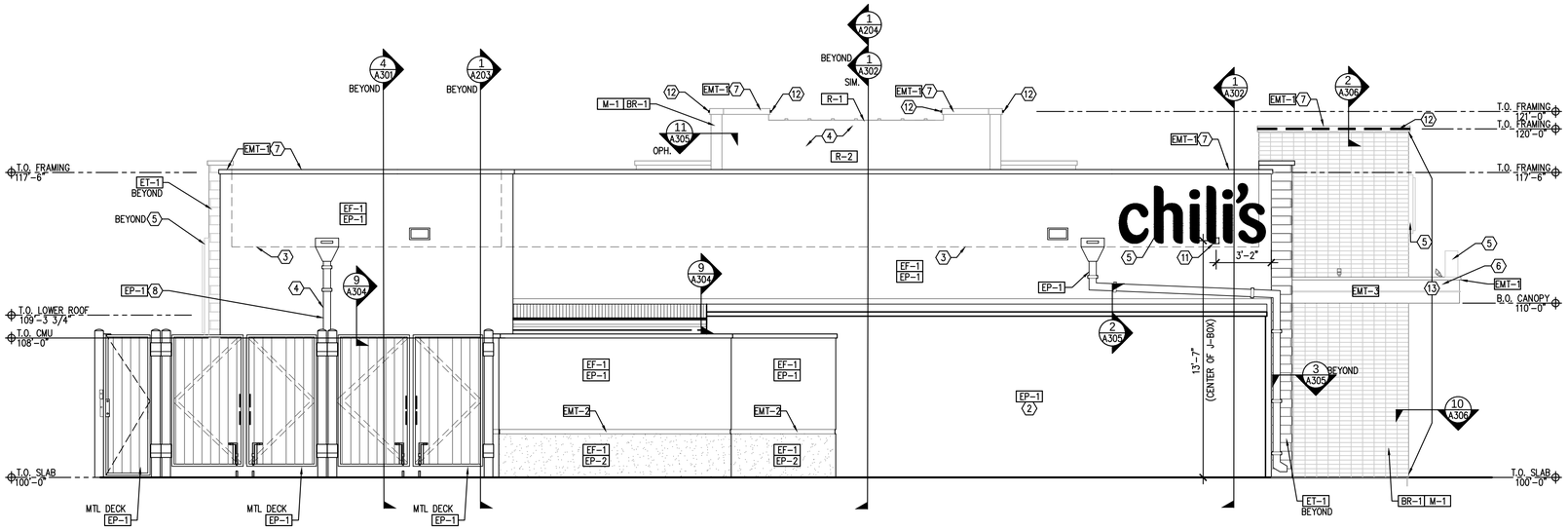

REAR (WEST) ELEVATION 1/4"=1'-0" | 1

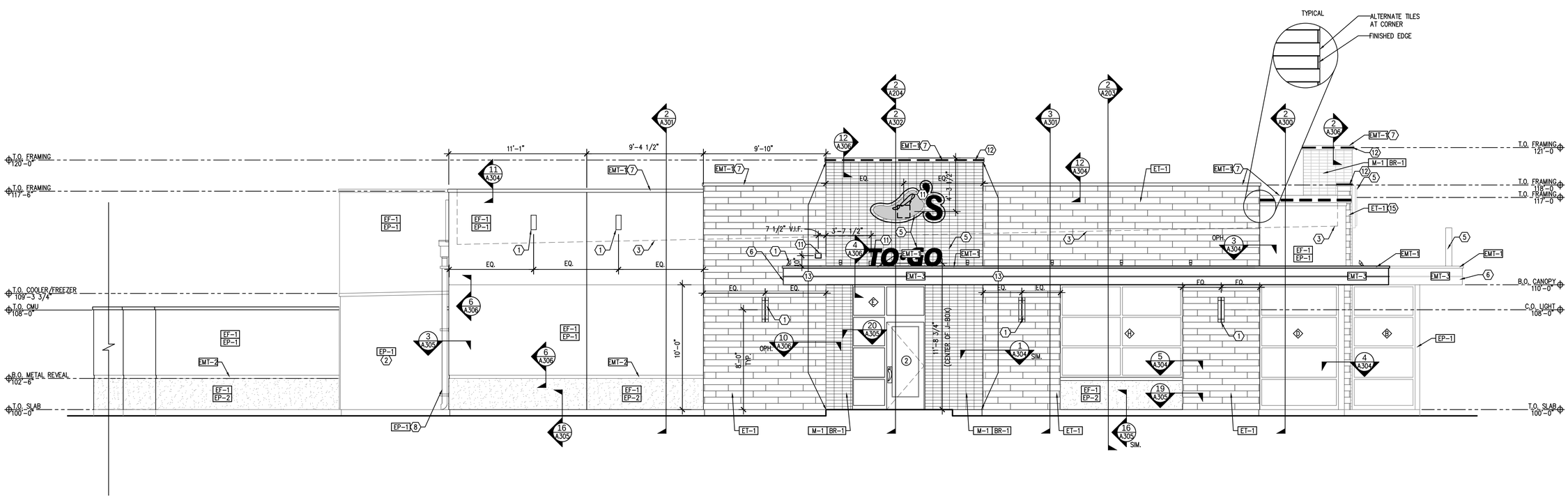

LEFT (SOUTH) ELEVATION 1/4"=1'-0" | 2

KEY NOTES:

1	LIGHT FIXTURE, TYPICAL, RE: ELECTRICAL.
2	COOLER IS NOT PREFINISHED BY MANUFACTURE.
3	LINE OF ROOF DECK BEYOND
4	ROOFING MEMBRANE BEYOND, RE: A141, COLOR 'CHARCOAL GRAY'
5	SIGNAGE, NOT IN CONTRACT. RE; ELECTRICAL FOR POWER SUPPLY
6	CANOPY BY G.C.
7	METAL CAP. PREFINISHED BLACK
8	GUTTER AND DOWNSPOUT. PAINT DOWNSPOUT TO BLEND W/ BACKGROUND. RE: 1/A142 AND 2/A142.
9	PAINT GAS LINE TO MATCH ADJACENT WALL FINISH. RE: CIVIL AND MPE101 FOR ADDITIONAL INFORMATION.
10	DASHED LINES INDICATE ROOF TOP EQUIPMENT BEYOND.
11	J-BOX BEYOND, RE: ELECTRICAL.
12	LED LIGHTING
13	BRICK TILE CORNER TO BE USED AT CORNER CONDITION AS PER PLAN DETAIL.
14	KNOX BOX 3200 SERIES. MOUNT NO LOWER THAN 5'-0" AND NO HIGHER THAN 6'-0" A.F.F., VERIFY FINAL LOCATION WITH FIRE MARSHAL PRIOR TO INSTALL.
15	WRAP FINISH TO BACK EDGE OF PARAPET

EXTERIOR FINISH SCHEDULE

EXTERIOR TILE	
ET-1	CEDAR ROUGH CUT WOODSTONE
BRICK	
BR-1	BURGUNDY
MORTAR	
M-1	IRON BLACK
FINISH	
EF-1	EIFS
EXTERIOR PAINTS AND STAINS	
EP-1	ANONYMOUS
EP-2	CANYON CLAY
EP-4	TRICORN BLACK
EP-5	SALUTE RED
METAL TRIM	
EMT-1	EDGE TRIM
EMT-2	METAL REVEAL
EMT-3	FASCIA COVER
EMT-4	METAL REVEAL
ROOFING	
R-1	STANDING SEAM METAL
R-2	DUROLAST SINGLE PLY ROOFING
R-3	CORRUGATED METAL ROOFING
AWNING	
AW-1	STANDING SEAM METAL
WOOD PANELING	
EWD-5	CUSTOM EXTERA CORE RED OAK VENEER PANEL

NOTE: FOR COMPLETE SPECIFICATIONS OF FINISHES, REFER TO SHEET A002.

ARCHITECT:

DAVID SCOTT WINDLE, AIA

6201 CAMPUS CIRCLE DRIVE E.
IRVING, TEXAS 75038
TEL: 972.870.1288
WWW.IDSTUDIO4.COM
E-MAIL scottw@idstudio4.com

CORPORATE:
BRINKER RESTAURANT CORPORATION,
A VIRGINIA CORPORATION
3000 OLYMPUS BLVD.
DALLAS, TEXAS 75019
972.980.9917
www.brinker.com

09/23/2024

ISSUE FOR BID

THESE DOCUMENTS ARE FOR BIDDING PURPOSES ONLY. DO NOT USE FOR CONSTRUCTION.

RESTAURANT #CH1679
PROTOTYPE 18.5FS

CHILI'S TOOELE
951 N MAIN STREET
TOOELE, UT 84074

CLIENT: BRINKER RESTAURANT CORP.
A VIRGINIA CORPORATION

DATE	DESCRIPTION
6/27/2024	ISSUE FOR PERMIT
9/23/2024	ISSUE FOR BID

△	DATE	DESCRIPTION

PROJECT NUMBER:
CHI24007

SHEET TITLE:
EXTERIOR ELEVATIONS

SHEET NUMBER:
A202

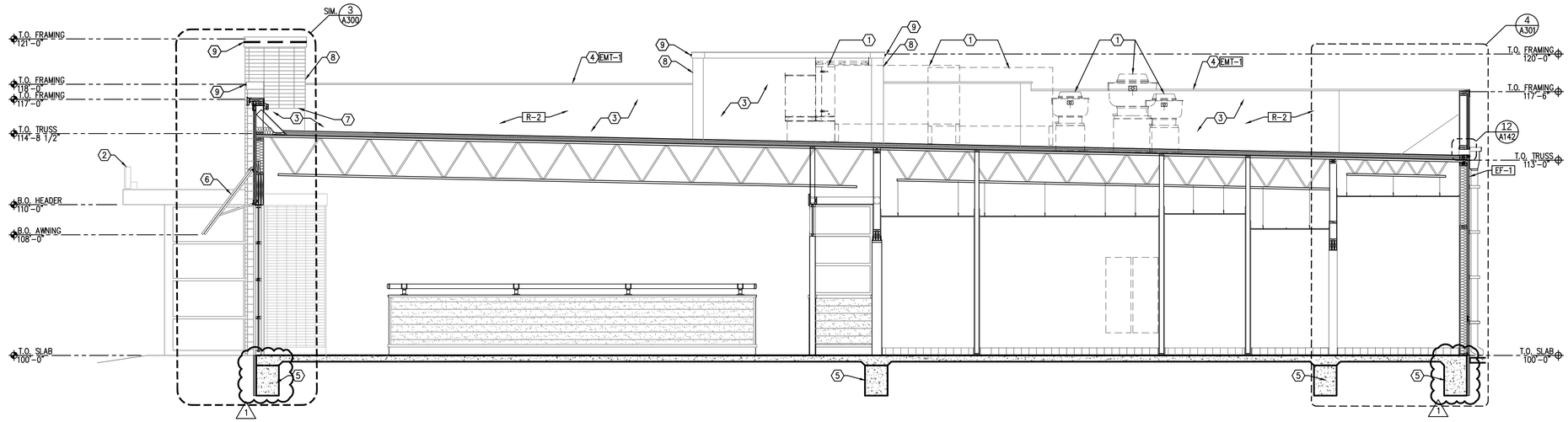

BUILDING SECTION 1
1/4"=1'-0"

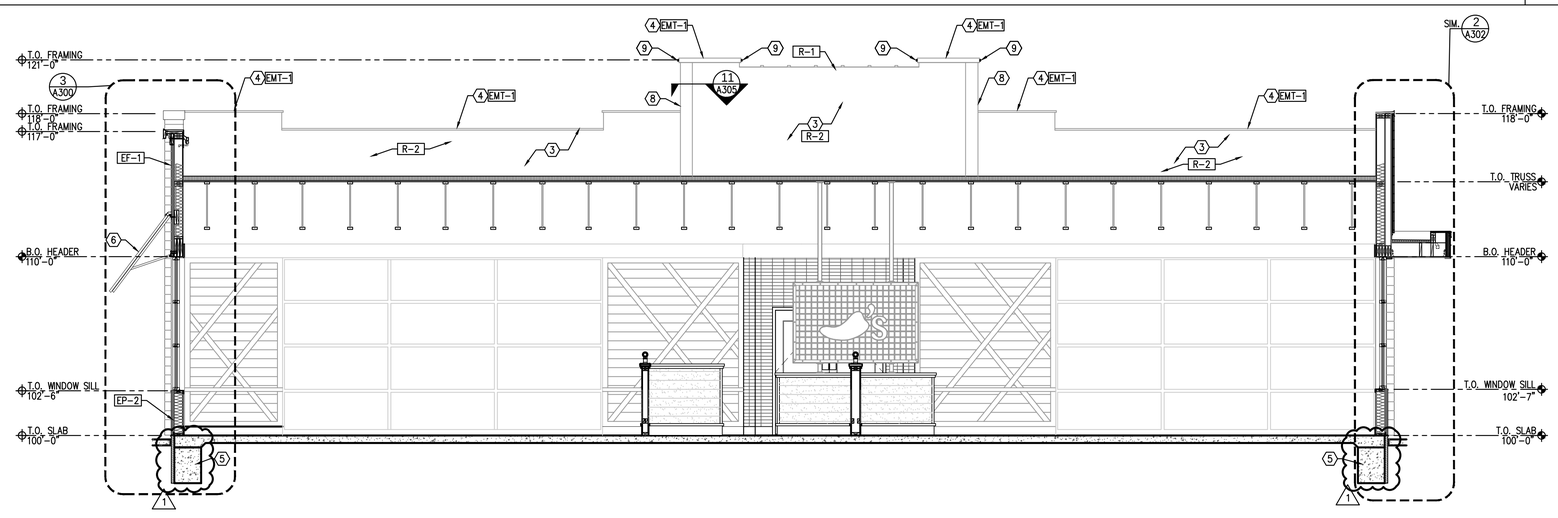

BUILDING SECTION 2
1/4"=1'-0"

NOT USED 3
1/4"=1'-0"

AWNING	
AWNING BY OTHERS:	AW-1 STANDING SEAM, COLOR-MATTE BLACK
STANDING SEAM 12" WIDE ZEE-LOCK. BERRIDGE KYNAR 500; COLOR: MATTE BLACK. BERRIDGE MANUFACTURING COMPANY 210.650.0379	

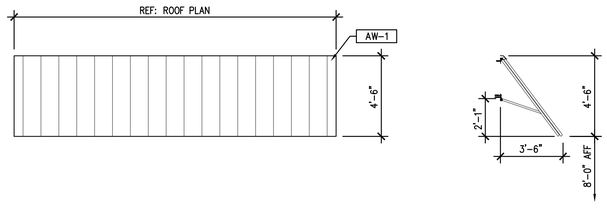

AWNING PROFILES 4
1/4"=1'-0"

GENERAL NOTES:

1	ALL SIGNAGE SUBJECT TO BUILDING INSPECTION DEPARTMENT APPROVAL; SEC. 22.100.4A
2	MECHANICAL UNITS SHALL BE SCREENED IN ACCORDANCE WITH THE ZONING ORDINANCE
3	UTILITY BOXES AND CONDUIT SHALL BE PAINTED TO MATCH BUILDING COLOR

KEY NOTES:

1	ROOFTOP EQUIPMENT; RE: MEP ROOF PLAN
2	SIGNAGE, NOT IN CONTRACT.
3	ROOFING BEYOND
4	METAL CAP, PREFINISHED BLACK
5	FOUNDATION; RE: STRUCTURAL
6	STANDING SEAM METAL CANOPY, NOT IN CONTRACT.
7	CAULKED DUROLAST HORIZONTAL TERMINATION BAR
8	CAULKED DUROLAST VERTICAL TERMINATION BAR
9	LED LIGHTING
10	[illegible]

EXTERIOR FINISH SCHEDULE

EXTERIOR TILE	
ET-1	CEDAR ROUGH CUT WOODSTONE
BRICK	
BR-1	BURGUNDY
MORTAR	
M-1	IRON BLACK
FINISH	
EF-1	EIFS
EXTERIOR PAINTS AND STAINS	
EP-1	ANONYMOUS
EP-2	CANYON CLAY
EP-4	TRICORN BLACK
EP-5	SALUTE RED
METAL TRIM	
EMT-1	EDGE TRIM
EMT-2	METAL REVEAL
EMT-3	FASCIA COVER
EMT-4	METAL REVEAL
ROOFING	
R-1	STANDING SEAM METAL
R-2	DUROLAST SINGLE PLY ROOFING
R-3	CORRUGATED METAL ROOFING
AWNING	
AW-1	STANDING SEAM METAL
WOOD PANELING	
EWD-5	CUSTOM EXTERA CORE RED OAK VENEER PANEL

NOTE: FOR COMPLETE SPECIFICATIONS OF FINISHES, REFER TO SHEET A002.

ARCHITECT:

DAVID SCOTT WINDLE, AIA

6201 CAMPUS CIRCLE DRIVE E.
IRVING, TEXAS 75038
TEL: 972.870.1288
WWW.IDSTUDIO4.COM
E-MAIL scottw@idstudio4.com

CORPORATE:
BRINKER RESTAURANT CORPORATION,
A VIRGINIA CORPORATION
3000 OLYMPUS BLVD.
DALLAS, TEXAS 75019
972.980.9917
www.brinker.com

09/23/2024
ISSUE FOR BID
THESE DOCUMENTS ARE FOR BIDDING PURPOSES ONLY. DO NOT USE FOR CONSTRUCTION.

RESTAURANT #CH1679
PROTOTYPE 18.5FS

CHILI'S TOOELE
951 N MAIN STREET
TOOELE, UT 84074

CLIENT: BRINKER RESTAURANT CORP.
A VIRGINIA CORPORATION

DATE	DESCRIPTION
6/27/2024	ISSUE FOR PERMIT
9/23/2024	ISSUE FOR BID

	DATE	DESCRIPTION
1	08.07.2024	CITY COMMENTS

PROJECT NUMBER:
CHI24007

SHEET TITLE:
BUILDING SECTIONS

SHEET NUMBER:
A203

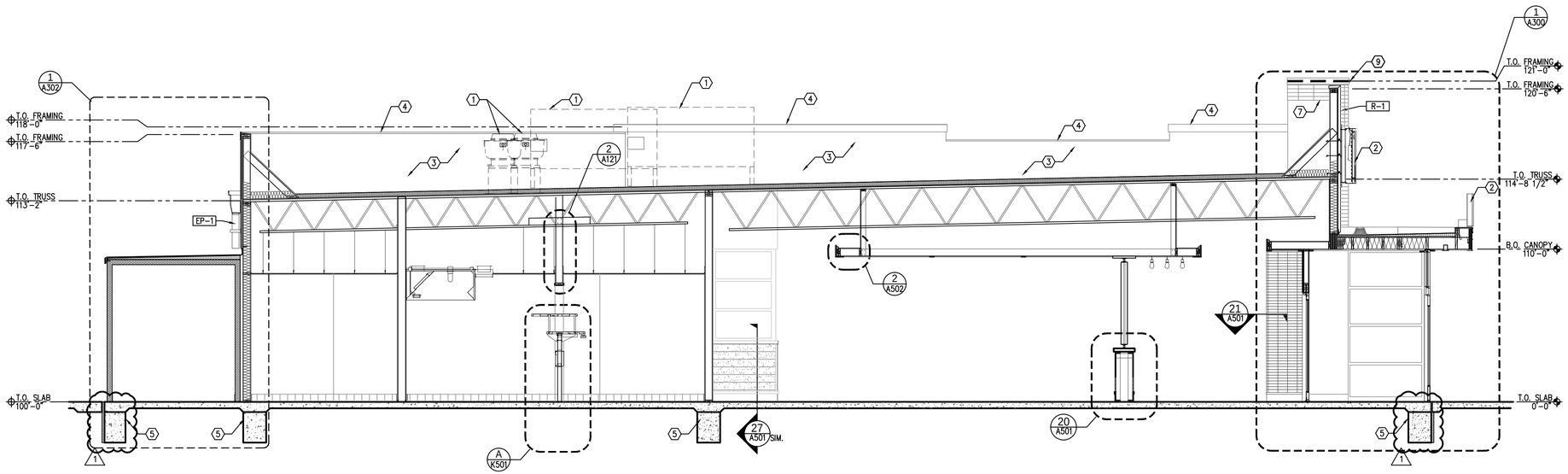

BUILDING SECTION 1
1/4"=1'-0"

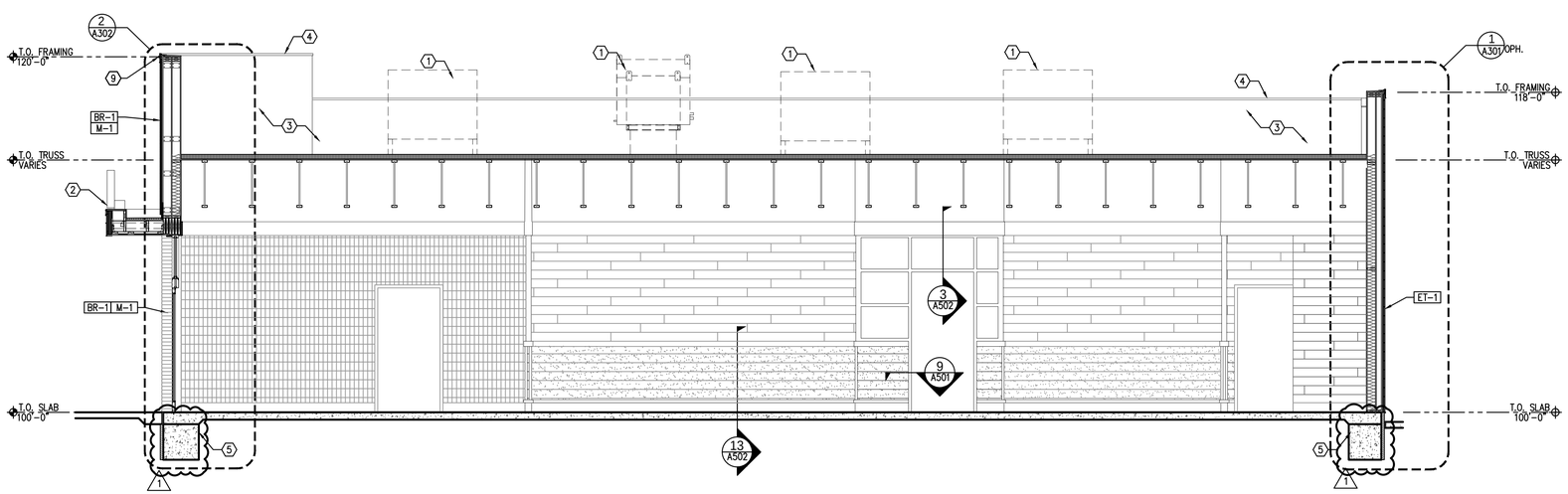

BUILDING SECTION 2
1/4"=1'-0"

GENERAL NOTES:

1	ALL SIGNAGE SUBJECT TO BUILDING INSPECTION DEPARTMENT APPROVAL; SEC. 22.100.4A
2	MECHANICAL UNITS SHALL BE SCREENED IN ACCORDANCE WITH THE ZONING ORDINANCE
3	UTILITY BOXES AND CONDUIT SHALL BE PAINTED TO MATCH BUILDING COLOR

KEY NOTES:

1	ROOFTOP EQUIPMENT; RE: MEP ROOF PLAN
2	SIGNAGE, NOT IN CONTRACT.
3	ROOFING BEYOND
4	METAL CAP, PREFINISHED BLACK
5	FOUNDATION; RE: STRUCTURAL
6	STANDING SEAM METAL CANOPY, NOT IN CONTRACT.
7	CAULKED DUROLAST HORIZONTAL TERMINATION BAR
8	CAULKED DUROLAST VERTICAL TERMINATION BAR
9	LED LIGHTING

EXTERIOR FINISH SCHEDULE

EXTERIOR TILE	
ET-1	CEDAR ROUGH CUT WOODSTONE
BRICK	
BR-1	BURGUNDY
MORTAR	
M-1	IRON BLACK
FINISH	
EF-1	EIFS
EXTERIOR PAINTS AND STAINS	
EP-1	ANONYMOUS
EP-2	CANYON CLAY
EP-4	TRICORN BLACK
EP-5	SALUTE RED
METAL TRIM	
EMT-1	EDGE TRIM
EMT-2	METAL REVEAL
EMT-3	FASCIA COVER
EMT-4	METAL REVEAL
ROOFING	
R-1	STANDING SEAM METAL
R-2	DUROLAST SINGLE PLY ROOFING
R-3	CORRUGATED METAL ROOFING
AWNING	
AW-1	STANDING SEAM METAL
WOOD PANELING	
EWD-5	CUSTOM EXTERA CORE RED OAK VENEER PANEL

NOTE: FOR COMPLETE SPECIFICATIONS OF FINISHES, REFER TO SHEET A002.

ARCHITECT:

DAVID SCOTT WINDLE, AIA

6201 CAMPUS CIRCLE DRIVE E.
IRVING, TEXAS 75038
TEL: 972.870.1288
WWW.IDSTUDIO4.COM
E-MAIL scottw@idstudio4.com

CORPORATE:
BRINKER RESTAURANT CORPORATION,
A VIRGINIA CORPORATION
3000 OLYMPUS BLVD.
DALLAS, TEXAS 75019
972.980.9917
www.brinker.com

09/23/2024
ISSUE FOR BID
THESE DOCUMENTS ARE FOR BIDDING PURPOSES ONLY. DO NOT USE FOR CONSTRUCTION.

RESTAURANT #CH1679
PROTOTYPE 18.5FS

CHILI'S TOOELE
951 N MAIN STREET
TOOELE, UT 84074

CLIENT: BRINKER RESTAURANT CORP.
A VIRGINIA CORPORATION

DATE	DESCRIPTION
6/27/2024	ISSUE FOR PERMIT
9/23/2024	ISSUE FOR BID

	DATE	DESCRIPTION
1	08.07.2024	CITY COMMENTS

PROJECT NUMBER:
CHI24007

SHEET TITLE:
BUILDING SECTIONS

SHEET NUMBER:
A204

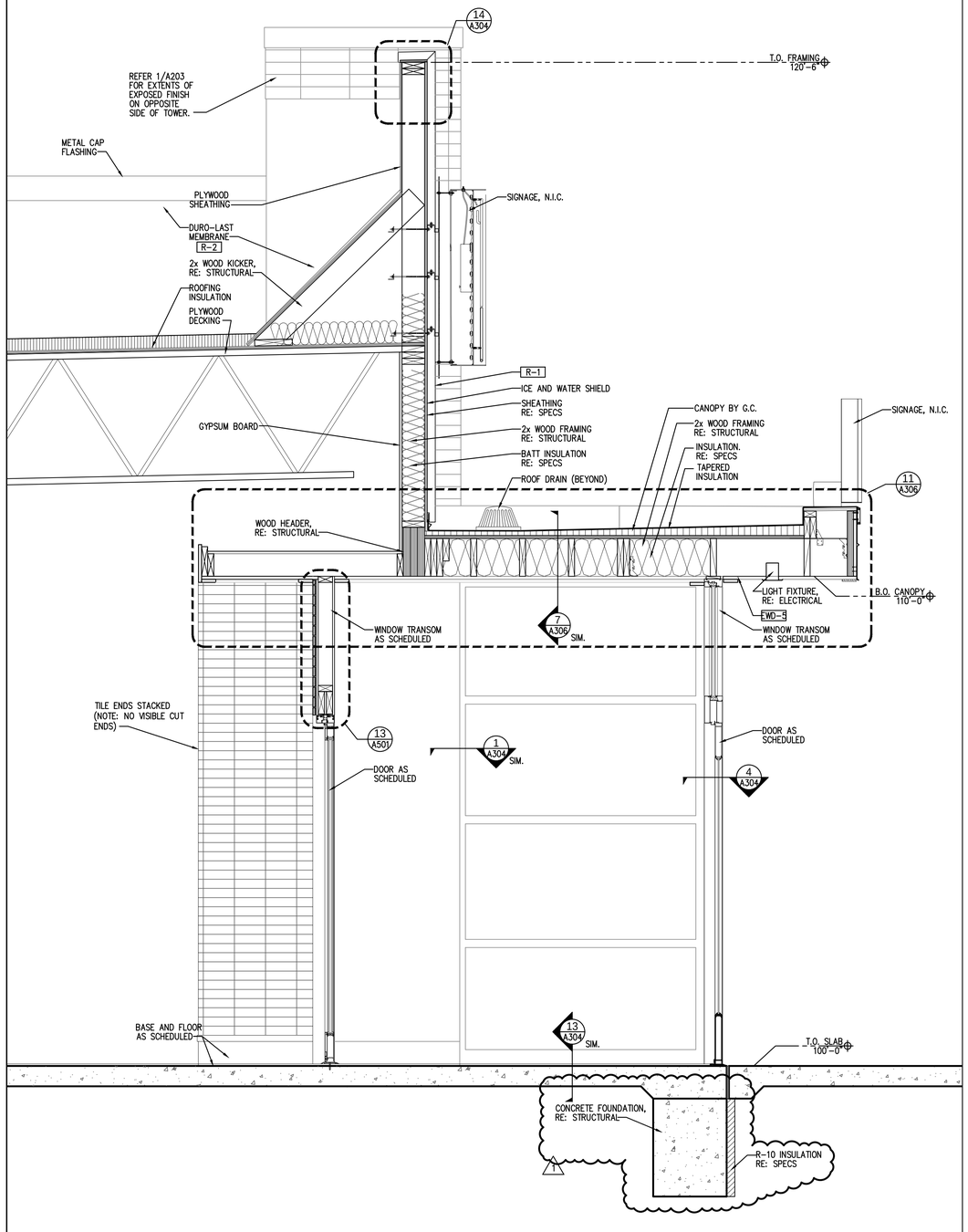

TOWER SECTION 1
3/4"=1'-0"

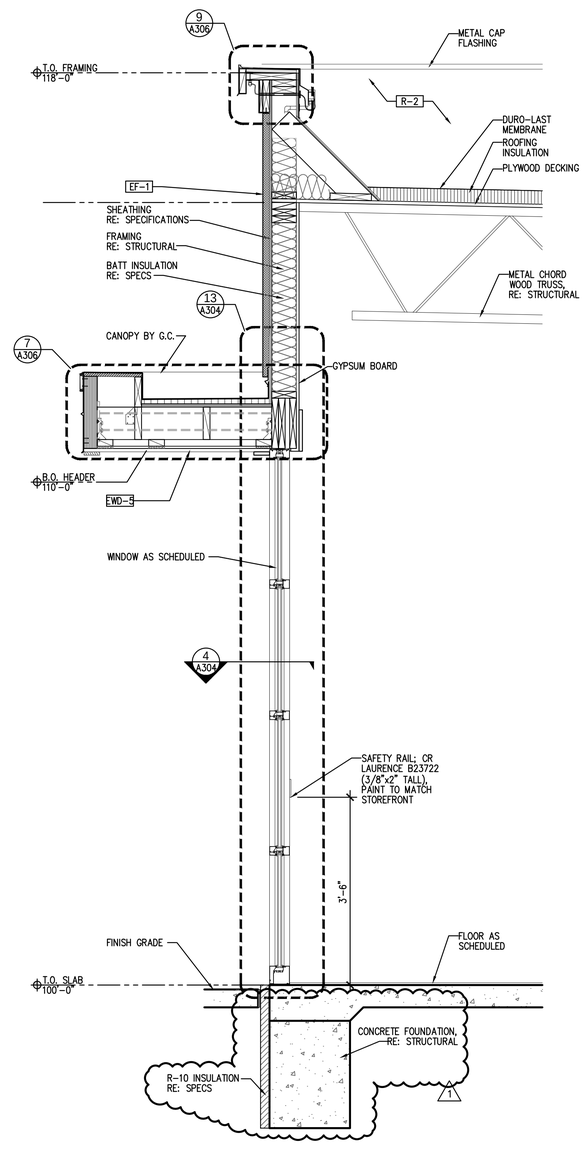

WALL SECTION 2
3/4"=1'-0"

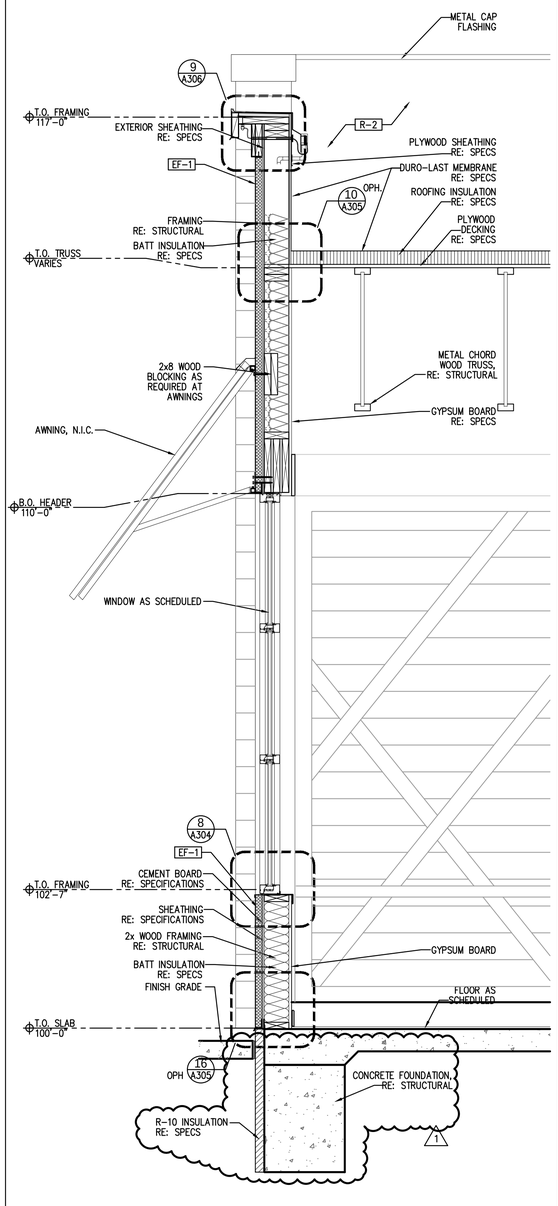

WALL SECTION 3
3/4"=1'-0"

ARCHITECT:

DAVID SCOTT WINDLE, AIA

6201 CAMPUS CIRCLE DRIVE E.
IRVING, TEXAS 75038
TEL: 972.870.1288
WWW.IDSTUDIO4.COM
E-MAIL scottw@idstudio4.com

CORPORATE:
BRINKER RESTAURANT CORPORATION, A VIRGINIA CORPORATION
3000 OLYMPUS BLVD.
DALLAS, TEXAS 75019
972.980.9917
www.brinker.com

09/23/2024
ISSUE FOR BID
THESE DOCUMENTS ARE FOR BIDDING PURPOSES ONLY. DO NOT USE FOR CONSTRUCTION.

RESTAURANT #CH1679
PROTOTYPE 18.5FS

CHILI'S TOOELE
951 N MAIN STREET
TOOELE, UT 84074

CLIENT: BRINKER RESTAURANT CORP. A VIRGINIA CORPORATION

DATE	DESCRIPTION
6/27/2024	ISSUE FOR PERMIT
9/23/2024	ISSUE FOR BID

	DATE	DESCRIPTION
1	08.07.2024	CITY COMMENTS

PROJECT NUMBER:
CHI24007

SHEET TITLE:
EXTERIOR WALL SECTION

SHEET NUMBER:
A300

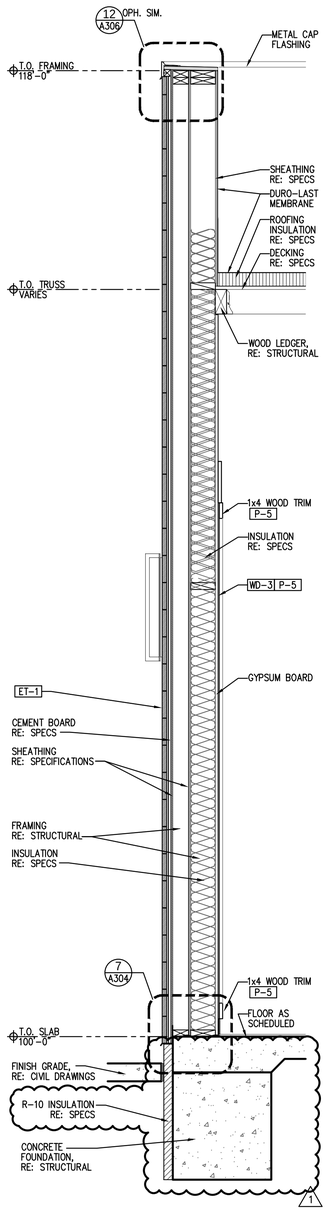

WALL SECTION 1
3/4"=1'-0"

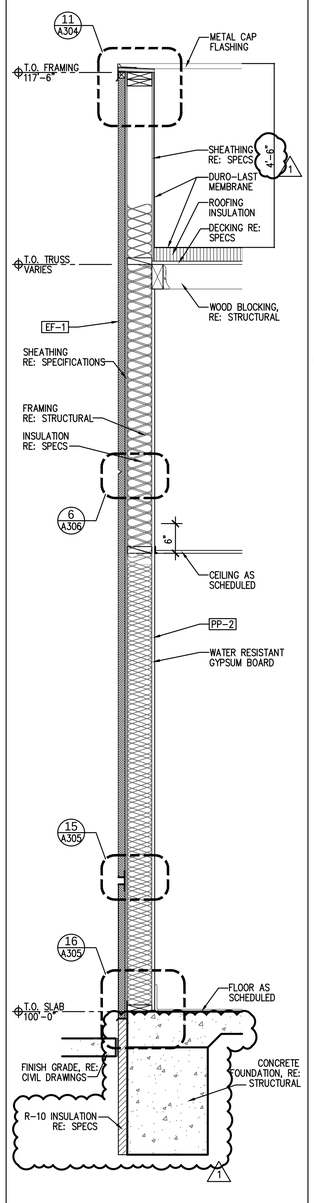

WALL SECTION 2
3/4"=1'-0"

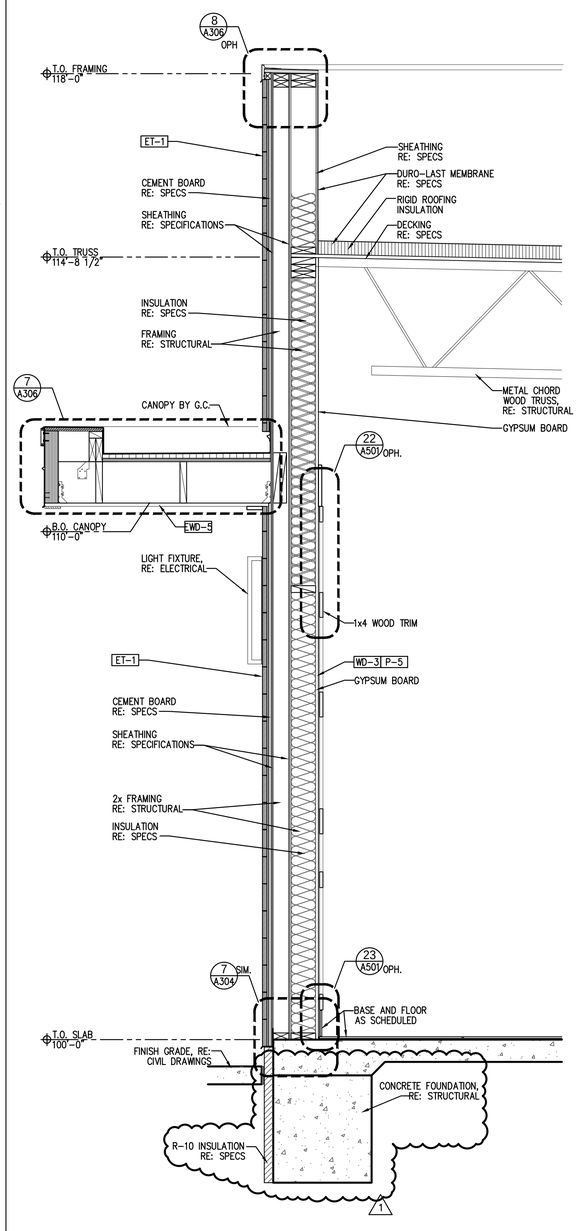

WALL SECTION 3
3/4"=1'-0"

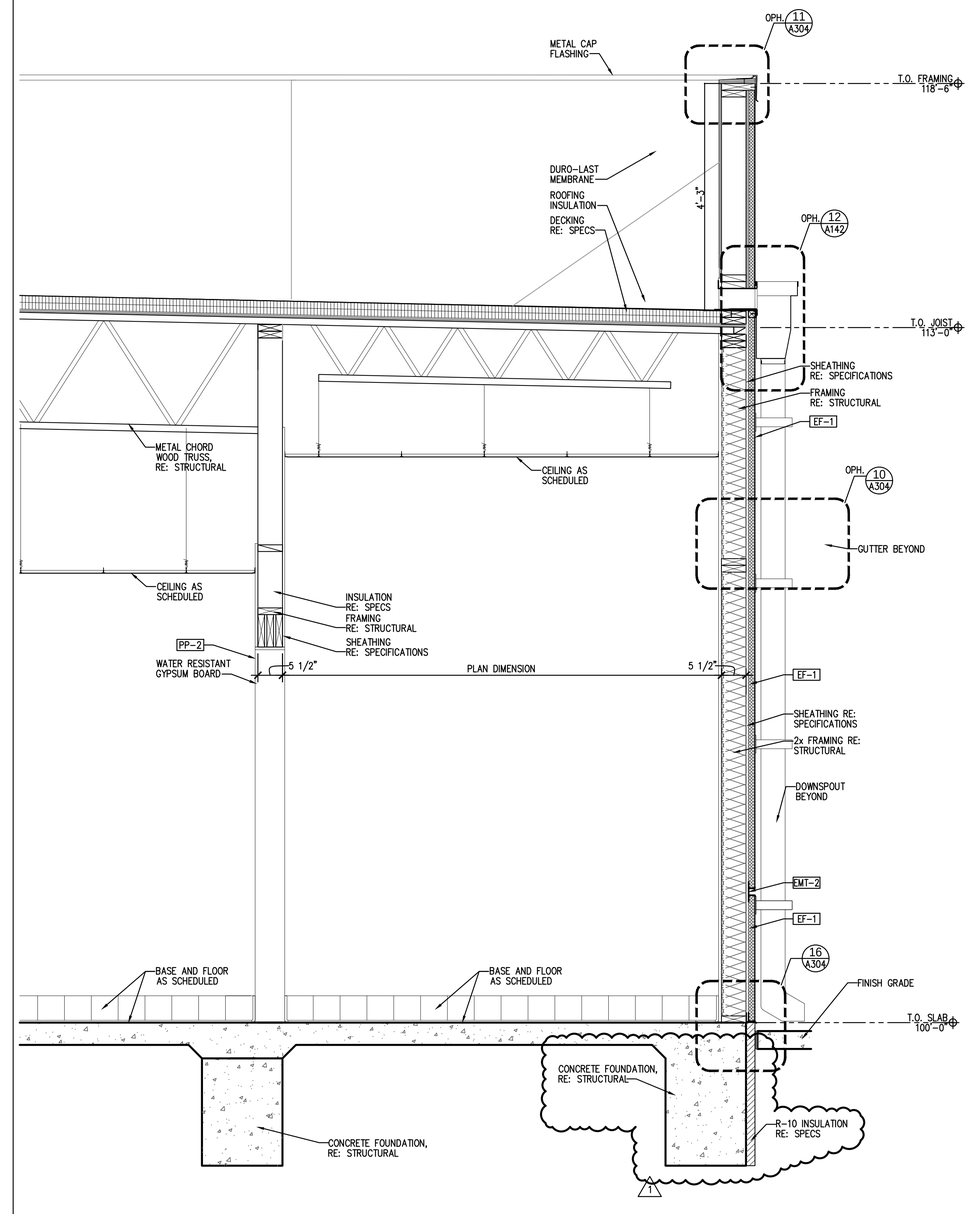

WALL SECTION 4
3/4"=1'-0"

ARCHITECT:

DAVID SCOTT WINDLE, AIA

6201 CAMPUS CIRCLE DRIVE E.
IRVING, TEXAS 75038
TEL: 972.870.1288
WWW.IDSTUDIO4.COM
E-MAIL scottw@idstudio4.com

CORPORATE:
BRINKER RESTAURANT CORPORATION, A VIRGINIA CORPORATION
3000 OLYMPUS BLVD.
DALLAS, TEXAS 75019
972.980.9917
www.brinker.com

09/23/2024

ISSUE FOR BID

THESE DOCUMENTS ARE FOR BIDDING PURPOSES ONLY. DO NOT USE FOR CONSTRUCTION.

RESTAURANT #CH1679
PROTOTYPE 18.5FCS

CHILI'S TOOELE
951 N MAIN STREET
TOOELE, UT 84074

CLIENT: BRINKER RESTAURANT CORP. A VIRGINIA CORPORATION

DATE	DESCRIPTION
6/27/2024	ISSUE FOR PERMIT
9/23/2024	ISSUE FOR BID

1	DATE	DESCRIPTION
1	08.07.2024	CITY COMMENTS

PROJECT NUMBER:
CHI24007

SHEET TITLE:
EXTERIOR WALL SECTIONS

SHEET NUMBER:
A301

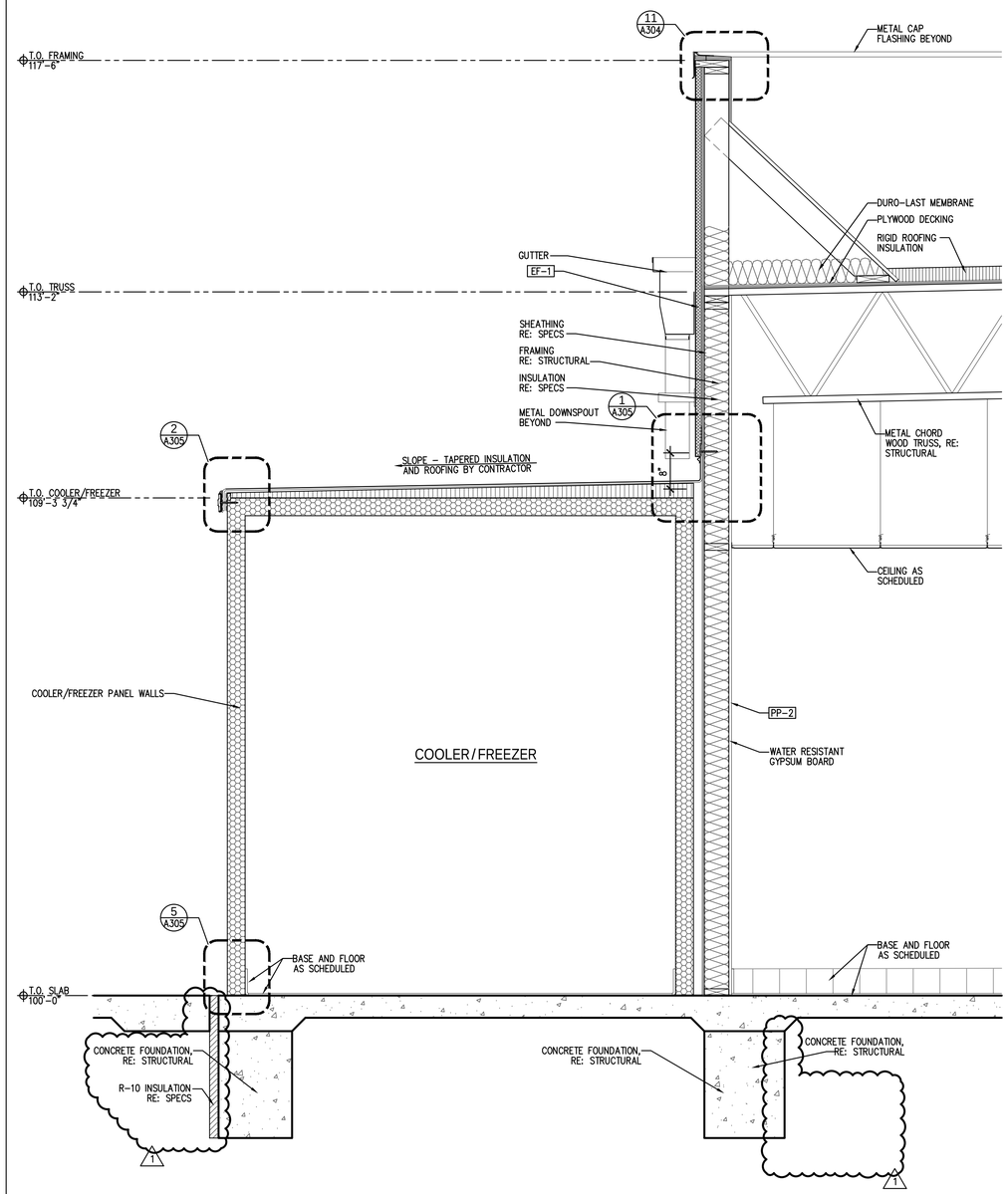

WALL SECTION 1
3/4"=1'-0"

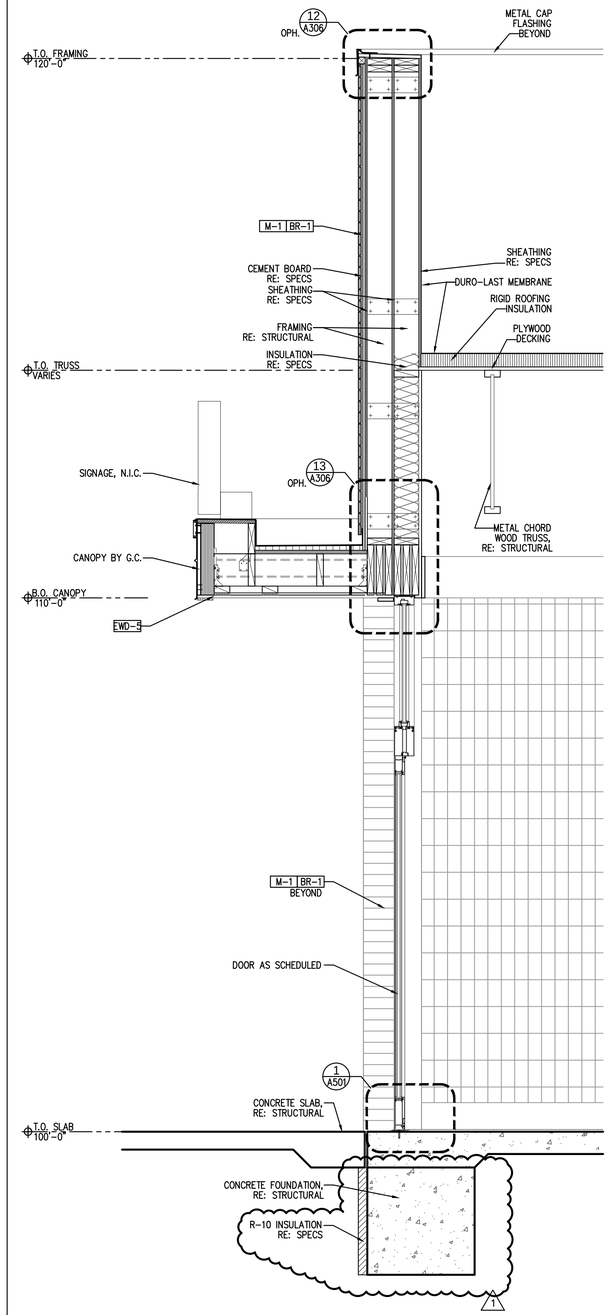

WALL SECTION 2
3/4"=1'-0"

ARCHITECT:

DAVID SCOTT
WINDLE, AIA

6201 CAMPUS CIRCLE DRIVE E.
IRVING, TEXAS 75038
TEL: 972.870.1288
WWW.IDSTUDIO4.COM
E-MAIL scottw@idstudio4.com

CORPORATE:
BRINKER RESTAURANT CORPORATION,
A VIRGINIA CORPORATION
3000 OLYMPUS BLVD.
DALLAS, TEXAS 75019
972.980.9917
www.brinker.com

09/23/2024
ISSUE FOR BID
THESE DOCUMENTS ARE FOR BIDDING PURPOSES ONLY. DO NOT USE FOR CONSTRUCTION.

RESTAURANT #CH1679
PROTOTYPE 18.5FCS

CHILI'S
TOOELE
951 N MAIN STREET
TOOELE, UT 84074

CLIENT: BRINKER RESTAURANT CORP.
A VIRGINIA CORPORATION

DATE	DESCRIPTION
6/27/2024	ISSUE FOR PERMIT
9/23/2024	ISSUE FOR BID

	DATE	DESCRIPTION
1	08.07.2024	CITY COMMENTS

PROJECT NUMBER:
CHI24007

SHEET TITLE:
EXTERIOR WALL SECTIONS

SHEET NUMBER:
A302

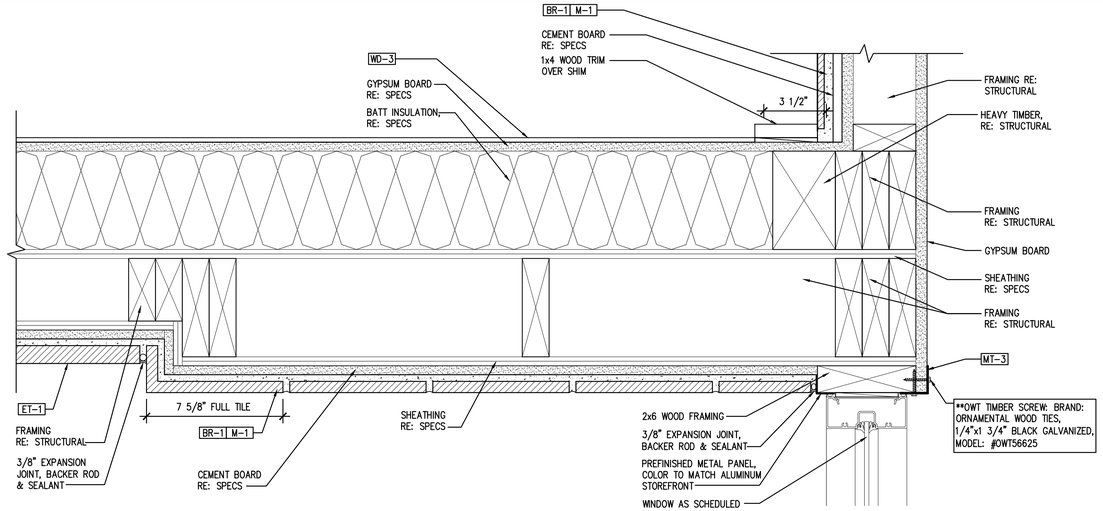

PLAN DETAIL 1
3"=1'-0"

NOT USED 2
3"=1'-0"

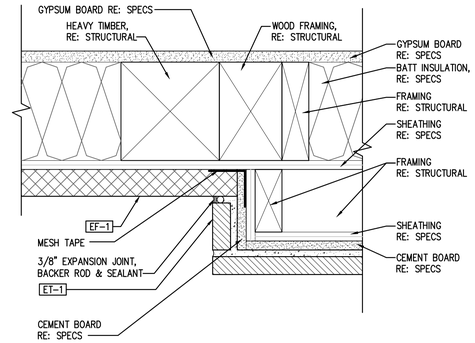

PLAN DETAIL 3
3"=1'-0"

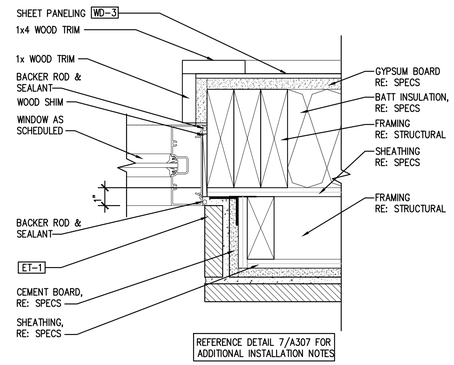

PLAN DETAIL 5
3"=1'-0"

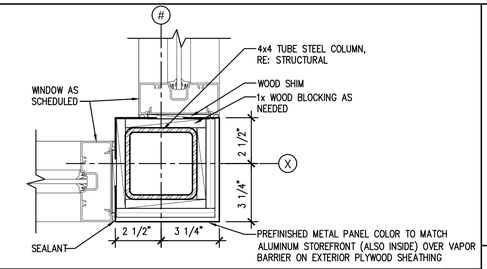

COLUMN DETAIL 4
3"=1'-0"

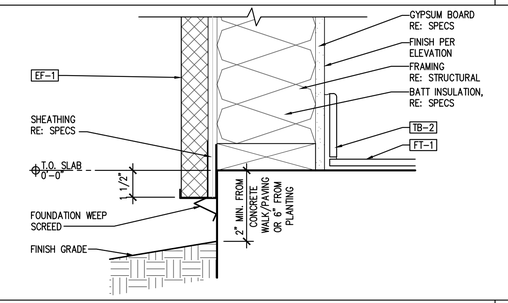

SECTION DETAIL 6
3"=1'-0"

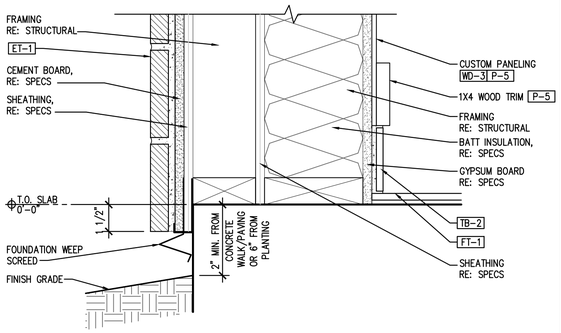

SECTION DETAIL 7
3"=1'-0"

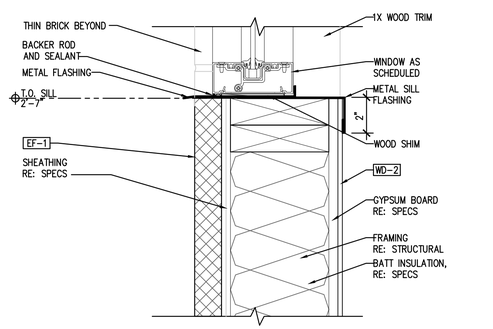

SECTION DETAIL 8
3"=1'-0"

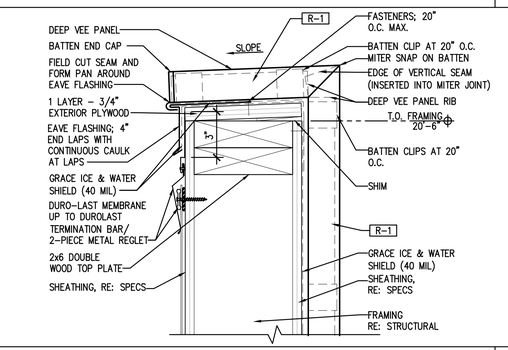

PARAPET DETAIL 14
3"=1'-0"

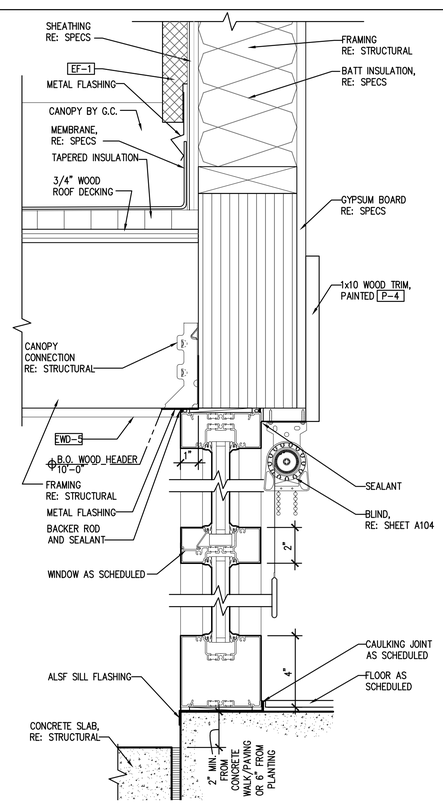

WINDOW SECTION 13
3"=1'-0"

PLAN DETAIL 15
3"=1'-0"

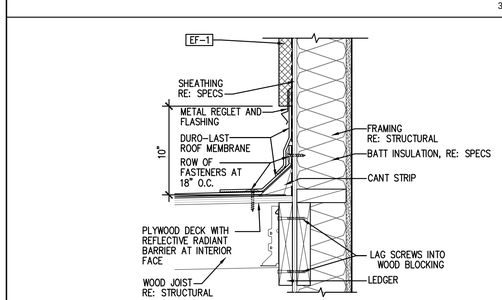

SECTION AT STORAGE 9
3"=1'-0"

NOT USED 10
1 =1'-0"

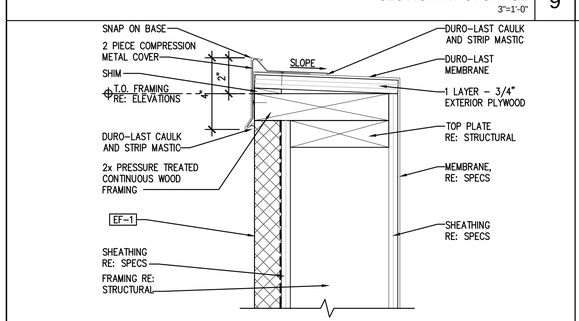

PARAPET SECTION 11
3"=1'-0"

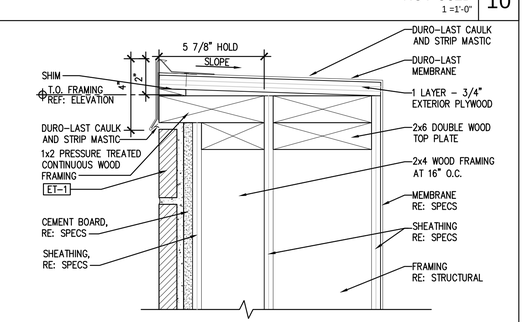

SECTION 12
1 =1'-0"

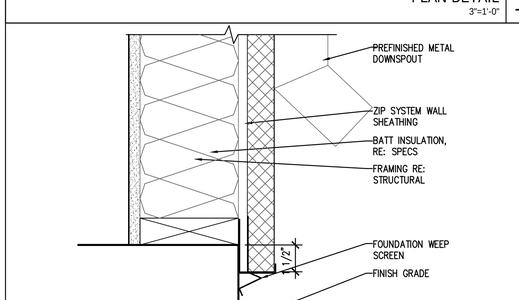

SECTION DETAIL 16
3"=1'-0"

ARCHITECT:
DAVID SCOTT WINDLE, AIA
6201 CAMPUS CIRCLE DRIVE E.
IRVING, TEXAS 75038
TEL: 972.870.1288
WWW.IDSTUDIO4.COM
E-MAIL scottw@idstudio4.com

CORPORATE:
BRINKER RESTAURANT CORPORATION, A VIRGINIA CORPORATION
3000 OLYMPUS BLVD.
DALLAS, TEXAS 75019
972.980.9917
www.brinker.com

09/23/2024
ISSUE FOR BID
THESE DOCUMENTS ARE FOR BIDDING PURPOSES ONLY. DO NOT USE FOR CONSTRUCTION.

RESTAURANT #CH1679
PROTOTYPE 18.5FS

CHILI'S TOOELE
951 N MAIN STREET
TOOELE, UT 84074

CLIENT: BRINKER RESTAURANT CORP. A VIRGINIA CORPORATION

DATE	DESCRIPTION
6/27/2024	ISSUE FOR PERMIT
9/23/2024	ISSUE FOR BID

DATE	DESCRIPTION

PROJECT NUMBER:
CHI24007

SHEET TITLE:
EXTERIOR DETAILS

SHEET NUMBER:
A304

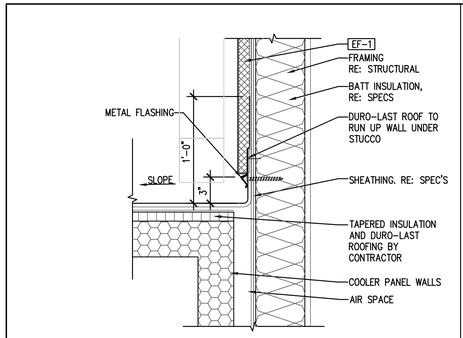

FLASHING DETAIL AT COOLER ROOF 1 | 1 1/2"=1'

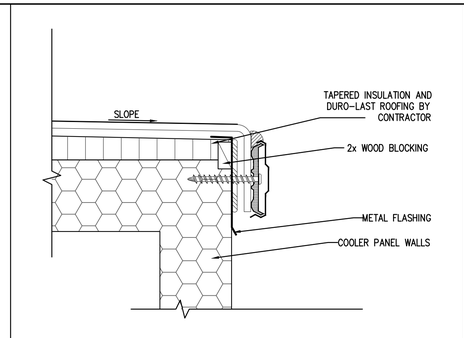

EDGE FLASHING DETAIL AT COOLER ROOF 2 | 3"=1'-0"

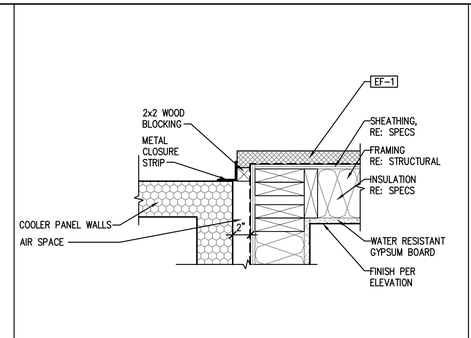

SHEET METAL CLOSURE DETAIL 3 | 1 1/2"=1'-0"

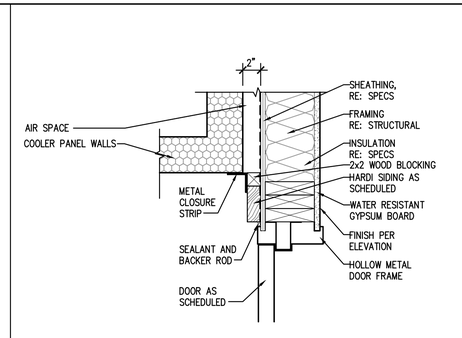

SHEET METAL CLOSURE DETAIL 4 | 1 1/2"=1'-0"

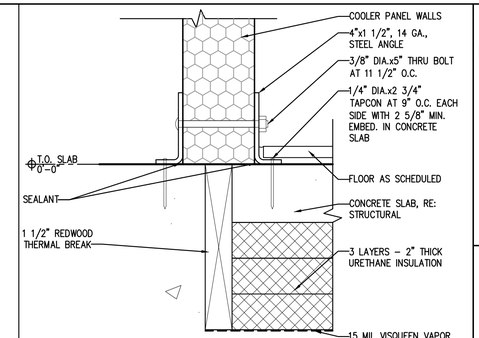

DETAIL AT FREEZER WALL 5 | 3"=1'-0"

ARCHITECT:

DAVID SCOTT
WINDLE, AIA

6201 CAMPUS CIRCLE DRIVE E.
IRVING, TEXAS 75038
TEL: 972.870.1288
WWW.IDSTUDIO4.COM
E-MAIL scottw@idstudio4.com

CORPORATE:
BRINKER RESTAURANT CORPORATION,
A VIRGINIA CORPORATION
3000 OLYMPUS BLVD.
DALLAS, TEXAS 75019
972.980.9917
www.brinker.com

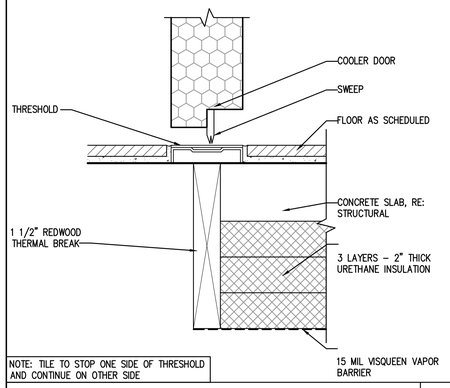

NOTE: TILE TO STOP ONE SIDE OF THRESHOLD AND CONTINUE ON OTHER SIDE

DETAIL AT FREEZER DOOR 6 | 3"=1'-0"

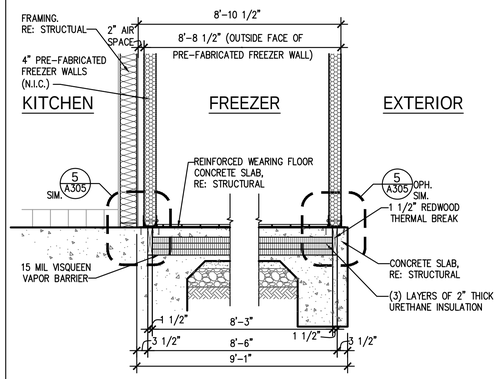

SECTION AT FREEZER 7 | 1/2"=1'-0"

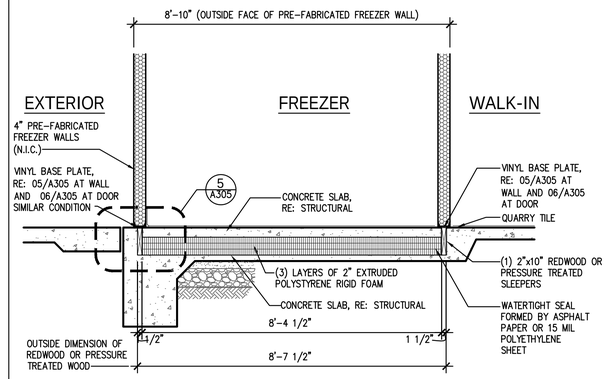

SECTION AT FREEZER 8 | 1/2"=1'-0"

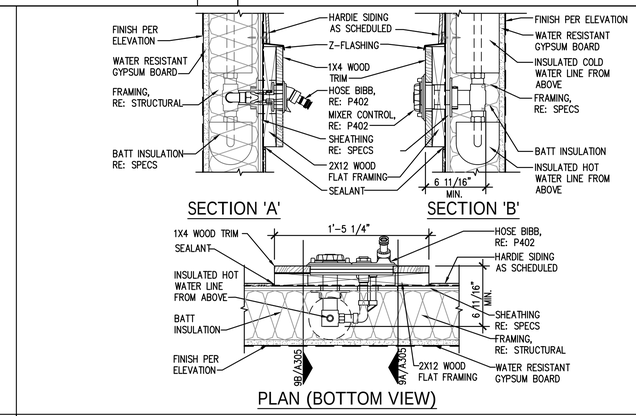

REAR HOSE BIBB 9 | 1 1/2"=1'-0"

09/23/2024
ISSUE FOR BID
THESE DOCUMENTS ARE FOR BIDDING PURPOSES ONLY. DO NOT USE FOR CONSTRUCTION.

RESTAURANT #CH1679
PROTOTYPE 18.5FS

CHILI'S
TOOELE
951 N MAIN STREET
TOOELE, UT 84074

CLIENT: BRINKER RESTAURANT CORP.
A VIRGINIA CORPORATION

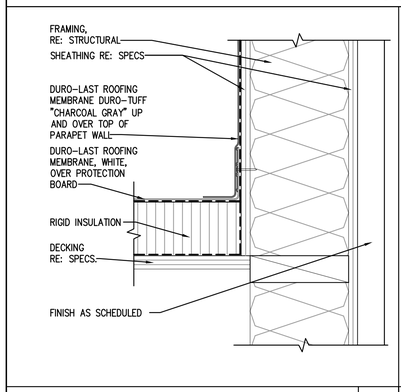

DURO-LAST PARAPET DETAIL 10 | 3"=1'-0"

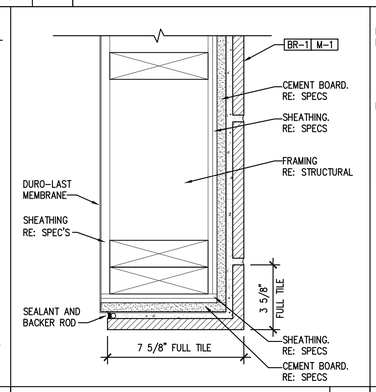

EXTERIOR CORNER TRIM DETAIL 11 | 6"=1'-0"

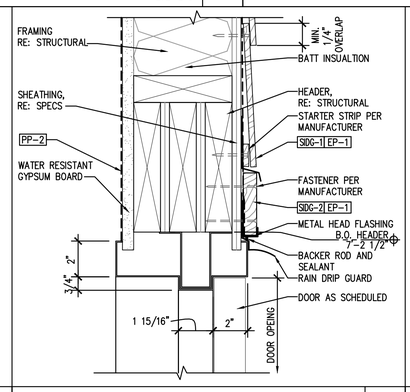

DOOR HEAD DETAIL AT REAR 12 | 3"=1'-0"

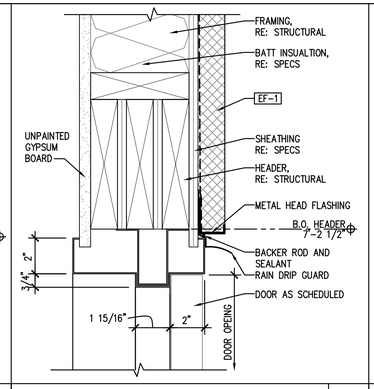

DOOR HEAD DETAIL 13 | 3"=1'-0"

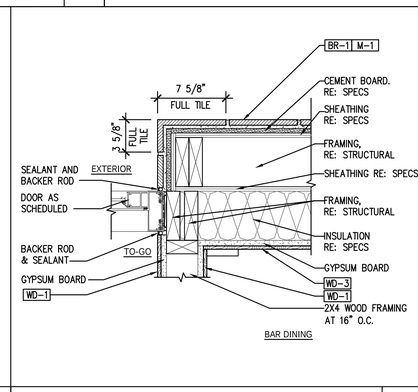

DOOR JAMB DETAIL 14 | 1 1/2"=1'-0"

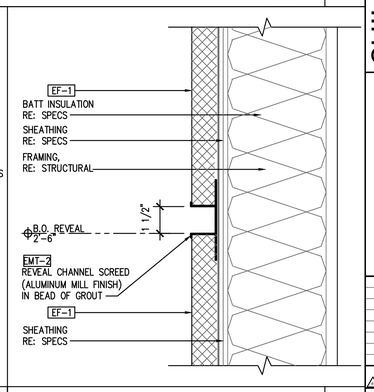

STUCCO REVEAL 15 | 3"=1'-0"

DATE	DESCRIPTION
6/27/2024	ISSUE FOR PERMIT
9/23/2024	ISSUE FOR BID

DATE	DESCRIPTION

PROJECT NUMBER:
CHI24007

SHEET TITLE:
EXTERIOR DETAILS

SHEET NUMBER:
A305

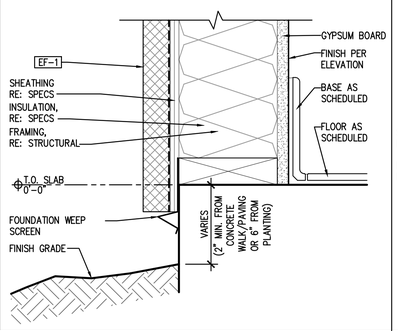

SECTION DETAIL 16 | 3"=1'-0"

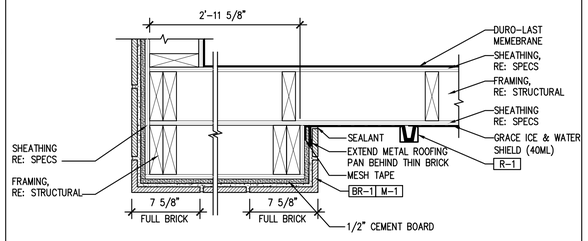

TOWER DETAIL 17 | 1 1/2"=1'-0"

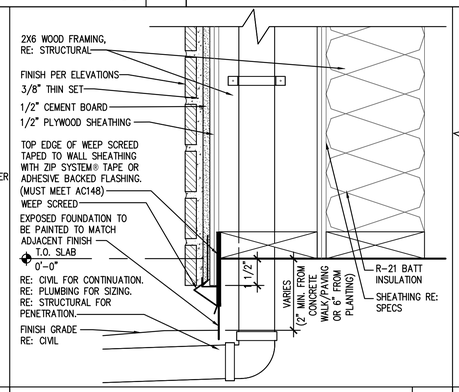

SECTION 18 | 3"=1'-0"

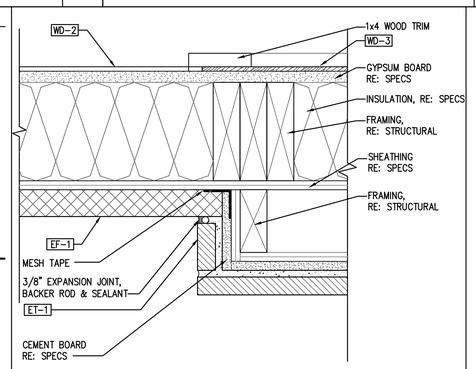

PLAN DETAIL 19 | 3"=1'-0"

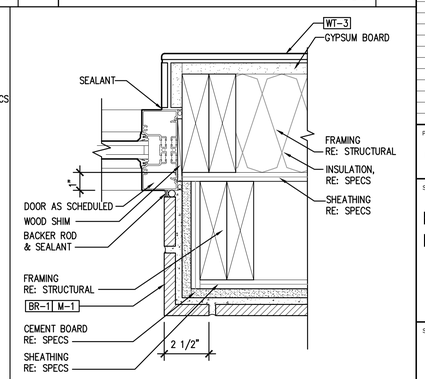

WINDOW JAMB 20 | 3"=1'-0"

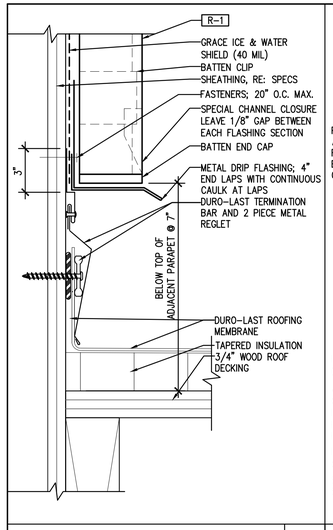

DURO-LAST DETAIL 1
6"=1'-0"

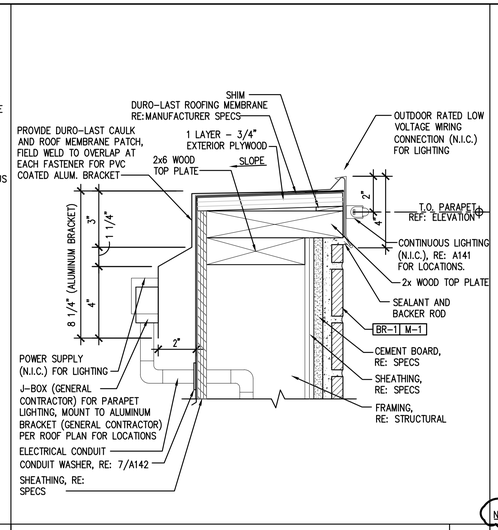

PARAPET SECTION @ BRICK 2
3"=1'-0"

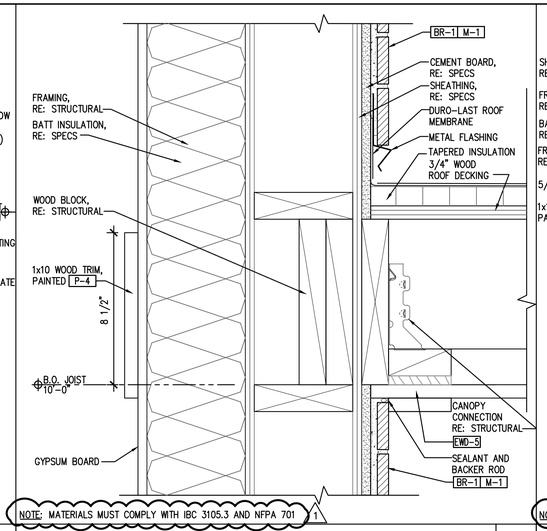

CANOPY AT BRICK SECTION 3
3"=1'-0"

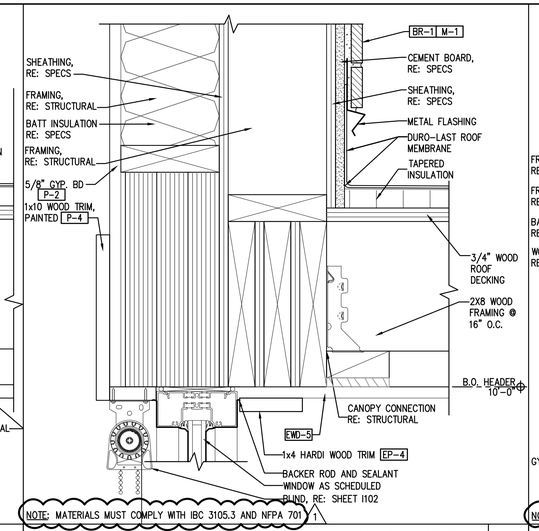

CANOPY AT BRICK SECTION 4
3"=1'-0"

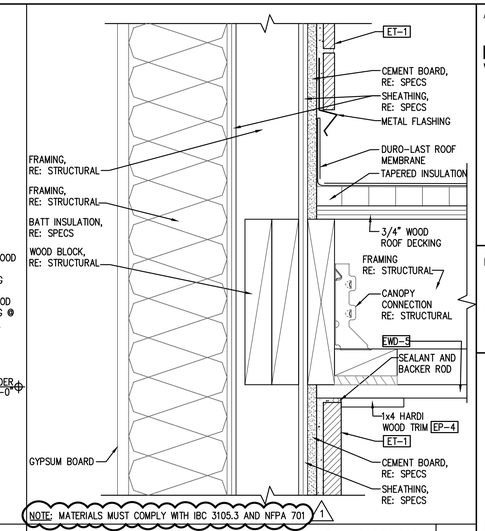

CANOPY AT TILE SECTION 5
3"=1'-0"

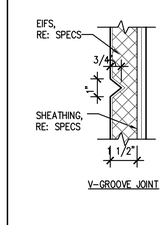

REVEAL DETAIL 6
3"=1'-0"

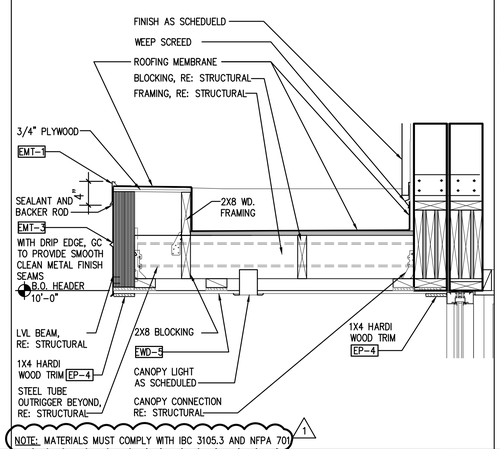

CANOPY DETAIL 7
1"=1'-0"

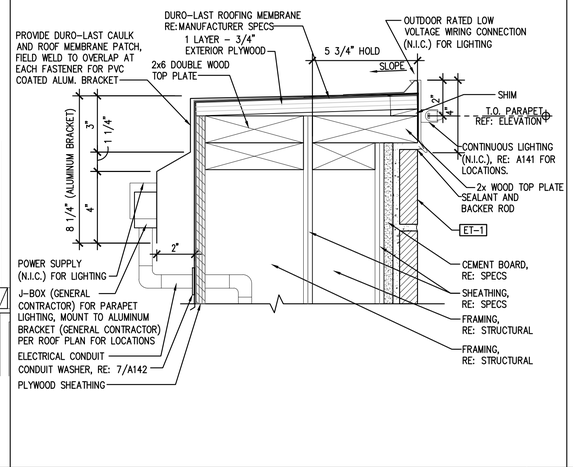

PARAPET SECTION @ STONE TILE 8
3"=1'-0"

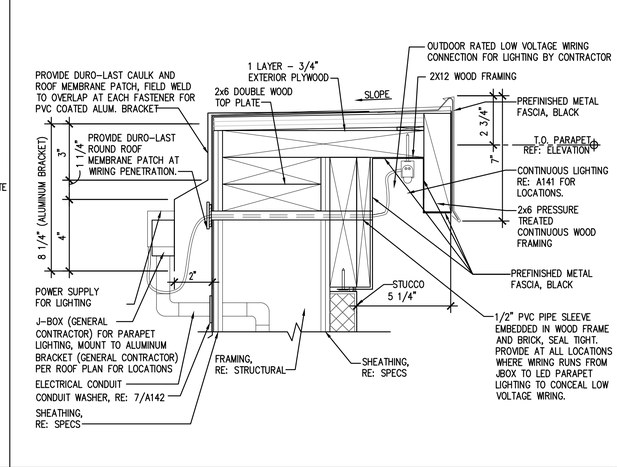

PARAPET SECTION @ LIGHT COVE 9
3"=1'-0"

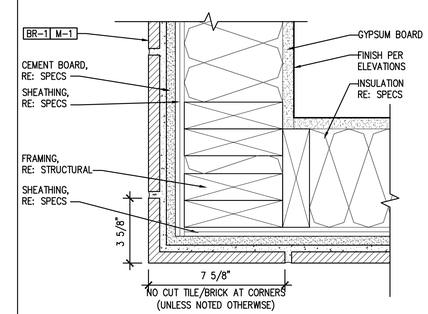

PLAN DETAIL 10
3"=1'-0"

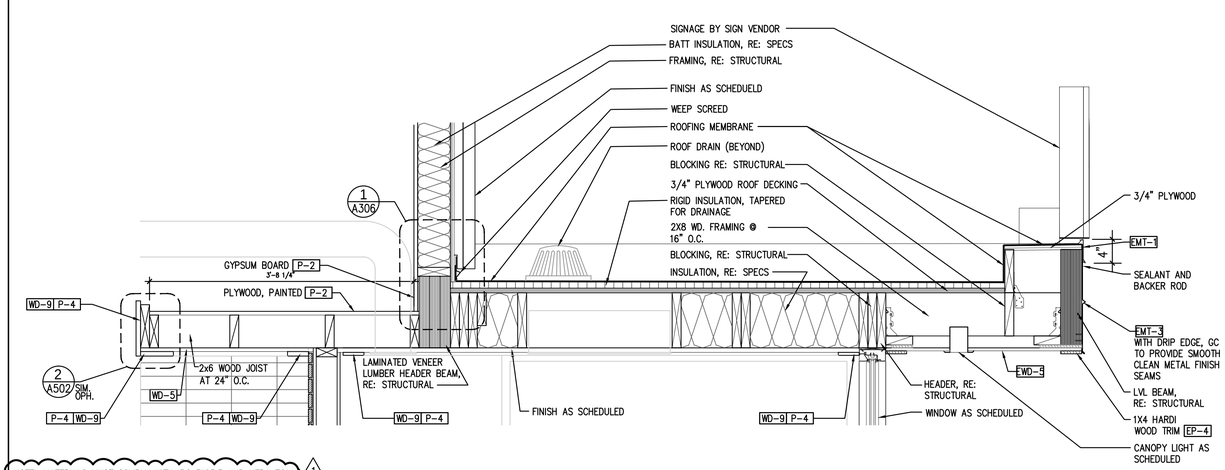

CANOPY DETAIL 11
1"=1'-0"

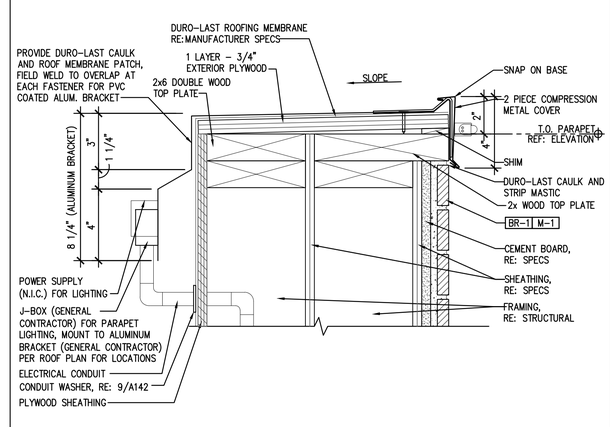

PARAPET DETAIL 12
3"=1'-0"

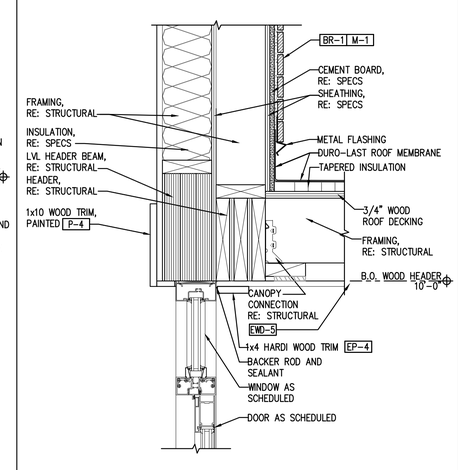

WINDOW DETAIL 13
1"=1'-0"

ARCHITECT:

DAVID SCOTT WINDLE, AIA

6201 CAMPUS CIRCLE DRIVE E.
IRVING, TEXAS 75038
TEL: 972.870.1288
WWW.IDSTUDIO4.COM
E-MAIL scottw@idstudio4.com

CORPORATE:
BRINKER RESTAURANT CORPORATION,
A VIRGINIA CORPORATION
3000 OLYMPUS BLVD.
DALLAS, TEXAS 75019
972.980.9917
www.brinker.com

09/23/2024
ISSUE FOR BID
THESE DOCUMENTS ARE FOR BIDDING PURPOSES ONLY. DO NOT USE FOR CONSTRUCTION.

RESTAURANT #CH1679
PROTOTYPE 18.5FS

CHILI'S TOOELE

951 N MAIN STREET
TOOELE, UT 84074

CLIENT: BRINKER RESTAURANT CORP.
A VIRGINIA CORPORATION

DATE	DESCRIPTION
6/27/2024	ISSUE FOR PERMIT
9/23/2024	ISSUE FOR BID

	DATE	DESCRIPTION
1	08.07.2024	CITY COMMENTS

PROJECT NUMBER:
CHI24007

SHEET TITLE:
EXTERIOR DETAILS

SHEET NUMBER:
A306

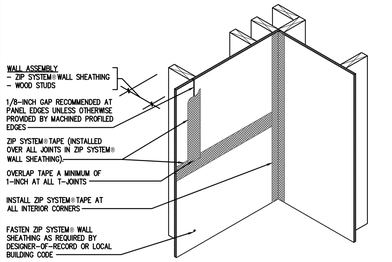

INSIDE CORNER N.T.S. | 1

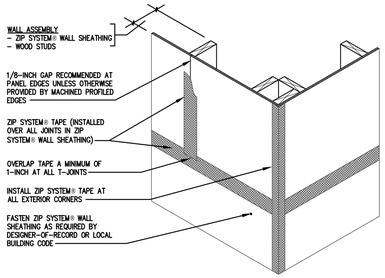

OUTSIDE CORNER N.T.S. | 2

NOT USED N.T.S. | 3

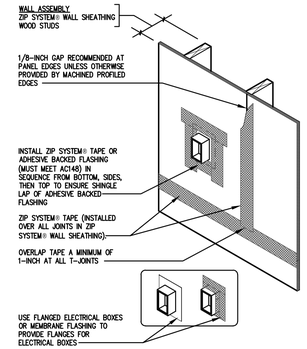

TYPICAL WALL AT ELECTRICAL PENETRATION N.T.S. | 4

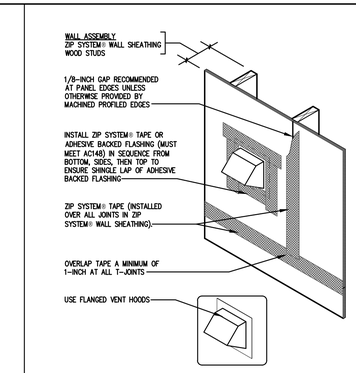

TYPICAL WALL AT MECHANICAL PENETRATION N.T.S. | 5

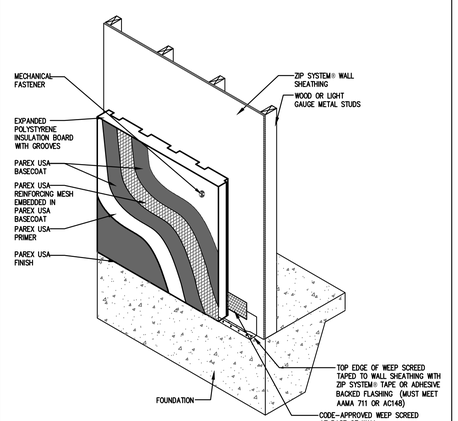

EIFS WALL N.T.S. | 6

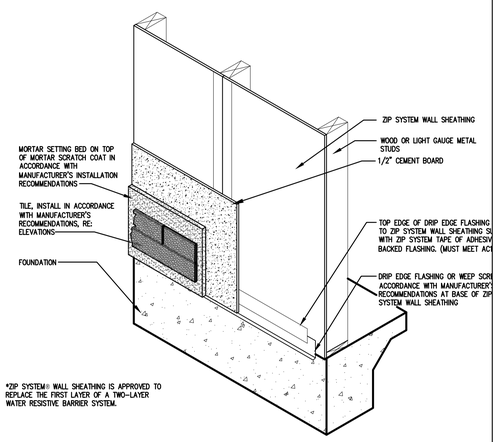

ADHERED TILE WALL N.T.S. | 7

NOT USED N.T.S. | 8

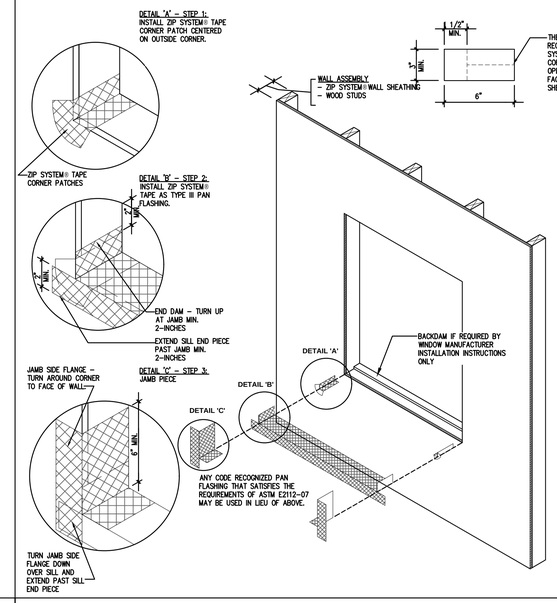

WINDOW FLASHING - 6" TAPE N.T.S. | 9

NOTES

ZIP SYSTEM SHEATHING INSTALLATION ON WALLS

OVERVIEW:

ZIP SYSTEM ROOF AND WALL SHEATHING IS COMPOSED OF ZIP SYSTEM PANELS AND ZIP SYSTEM SEAM SEALING TAPE. ZIP SYSTEM ROOF AND WALL SHEATHING PANELS SHOULD BE FULLY INSTALLED BEFORE THE SEAM SEALING TAPE IS APPLIED. THE FOLLOWING INSTALLATION STEPS ARE PRESENTED AS A GENERAL OUTLINE OF THE INSTALLATION PROCESS. THESE ARE MANUFACTURER INSTALLATION RECOMMENDATIONS – VISIT ZIPSYSTEM.COM FOR A LIBRARY OF FLASHING AND INSTALLATION DETAILS. YOU ARE FULLY AND SOLELY RESPONSIBLE FOR ALL SAFETY REQUIREMENTS. GOOD CONSTRUCTION AND SAFETY PRACTICES SHOULD BE FOLLOWED AT ALL TIMES.

STEP 1:

INSTALL ZIP SYSTEM ROOF AND WALL SHEATHING PANELS POSITIONED WITH THE WATER-RESISTIVE BARRIER FACING OUTSIDE. THE PANELS MAY BE INSTALLED WITH THE LONG SIDE OF THE PANEL ORIENTED EITHER HORIZONTALLY OR VERTICALLY TO THE FRAMING MEMBERS. WALLS THAT ARE DESIGNED TO RESIST LATERAL SHEAR FORCES AND SHEATHED WITH WOOD STRUCTURAL PANELS TYPICALLY REQUIRE SOLID FRAMING OR BLOCKING BEHIND ALL PANEL EDGES. IF ORIENTED HORIZONTALLY, BLOCK HORIZONTAL JOINTS IF WALL IS DESIGNED FOR BRACING OR AS A SHEAR WALL.

STEP 2:

FASTEN THE PANELS TO THE FRAMING MEMBERS WITH CODE APPROVED FASTENERS. SPACE FASTENERS 6" O.C. ALONG SUPPORTED EDGES AND 12" O.C. AT INTERMEDIATE SUPPORTS, UNLESS OTHERWISE SPECIFIED BY LOCAL CODE OR THE DESIGNER OF RECORD. IT IS THE RESPONSIBILITY OF THE GENERAL CONTRACTOR TO VERIFY PROPER FASTENER TYPE AND SPACING PRIOR TO INSTALLATION. APPLY THE FASTENERS 3/8" FROM THE ENDS AND CORNERS. AN IDEAL INSTALLATION WOULD BE WHERE FASTENER HEADS ARE FLUSH WITH THE PANEL SURFACE. HOWEVER, DUE TO VARIATIONS IN MATERIALS AND LIMITATIONS ON EQUIPMENT, THIS MAY BE DIFFICULT TO ACHIEVE IN SOME SITUATIONS. IT IS NOT REQUIRED TO TAPE OVER OVERDRIVEN FASTENERS UNLESS THE FASTENER HEAD CREATES A HOLE THROUGH THE ENTIRE PANEL THICKNESS. REFER TO THE TECHNICAL TIP "OVERDRIVEN FASTENERS IN ZIP SYSTEM ROOF AND WALL SHEATHING," ON ZIPSYSTEM.COM FOR MORE INFORMATION.

ZIP SYSTEM TAPE INSTALLATION - WALL PANEL SEAMS

APPLY ZIP SYSTEM TAPE AFTER ALL ZIP SYSTEM WALL SHEATHING PANELS ARE FULLY FASTENED TO WALL-FRAMING MEMBERS. ONLY ZIP SYSTEM TAPE SHOULD BE USED TO SEAL THE SEAMS OF ZIP SYSTEM PANELS. ENSURE THAT THE PANEL SURFACE IS DRY AND FREE OF SAWDUST AND DIRT PRIOR TO TAPING. ZIP SYSTEM TAPE IS A CONTACT TAPE THAT REQUIRES PRESSURE FOR AN ADEQUATE SEAL.

STEP 1:

TAPE ALL SEAMS USING ZIP SYSTEM TAPE AND BEGINNING AT THE BOTTOM OF THE WALL. ENSURE THAT THE TAPE IS CENTERED OVER THE SEAM WITHIN ±1/2" TO PROVIDE ADEQUATE COVERAGE AND THAT WRINKLES IN TAPE ARE MINIMAL. USE THE ZIP SYSTEM TAPE GUN OR ROLLER TO APPLY PRESSURE TO THE TAPE AND SMOOTH OUT ANY WRINKLES.

STEP 2:

WHEREVER TAPE SPLICES OCCUR AT A HORIZONTAL OR VERTICAL SEAM, CREATE AN OVERLAPPING SPLICE OF AT LEAST 3". AT T-JOINTS, THE TAPE PIECES SHOULD OVERLAP BY AT LEAST 1". UPPER TAPE SHOULD ALWAYS LAP OVER LOWER TAPE. APPLY MODERATE PRESSURE ONTO THE SURFACE OF THE TAPE TO ENSURE A SECURE BOND BETWEEN THE PANEL AND THE TAPE. USE THE ZIP SYSTEM TAPE GUN OR ROLLER TO APPLY PRESSURE TO THE TAPE AND SMOOTH OUT ANY WRINKLES. TAKE SPECIAL CARE TO REMOVE ANY VOIDS AND/OR TRAPPED AIR AT SPLICE AREAS AND T-JOINTS.

STEP 3:

TAPE INSIDE AND OUTSIDE CORNER SEAMS.

8' PANEL EDGES

THE UNIQUE EDGE PROFILE IS DESIGNED TO ACCOMMODATE INCREMENTAL PANEL EXPANSION AND DOES NOT REQUIRE MANUAL GAPPING ALONG THE 8' EDGES.*

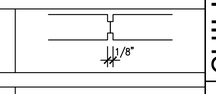

8' AND 4' PANEL EDGES

MAINTAIN 1/8" SPACE WHERE 8' PANEL EDGES MEET 4' PANEL EDGES. UNIQUE EDGE PROFILE DOES NOT PROVIDE THE FULL 1/8" RECOMMENDED SPACE FOR THIS CONDITION.

4' PANEL EDGES

MAINTAIN 1/8" SPACE WHERE 4' EDGES MEET. UNIQUE EDGE PROFILE IS ON 8' EDGES ONLY.*

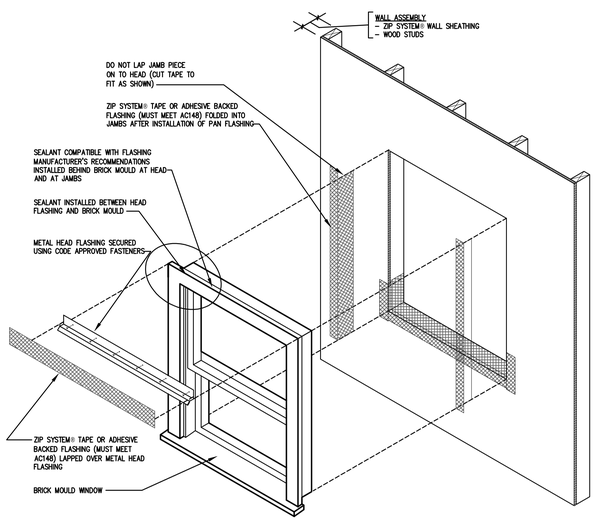

TYPICAL MOLD WINDOW FLASHING N.T.S. | 10

NOT USED N.T.S. | 11

NOT USED N.T.S. | 12

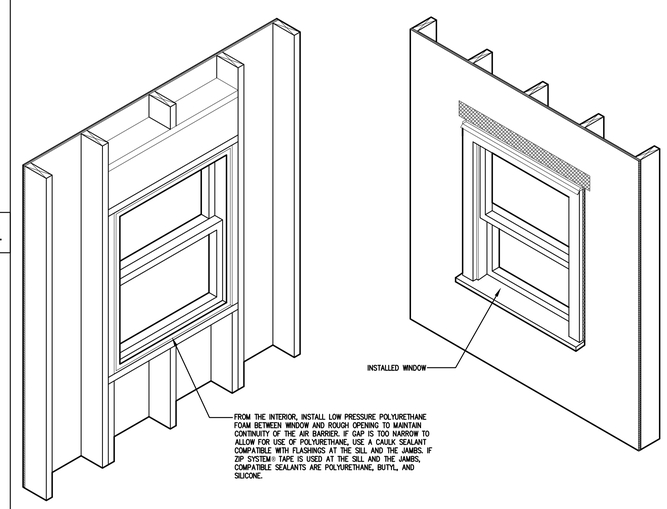

TYPICAL MOLD WINDOW SEALING N.T.S. | 13

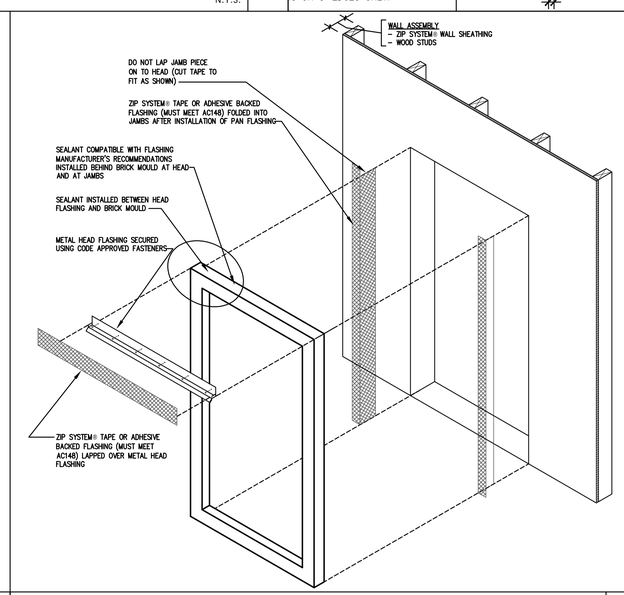

TYPICAL MOLD STOREFRONT FLASHING N.T.S. | 14

ARCHITECT:

DAVID SCOTT WINDLE, AIA

6201 CAMPUS CIRCLE DRIVE E.
IRVING, TEXAS 75038
TEL: 972.870.1288
WWW.IDSTUDIO4.COM
E-MAIL scottw@idstudio4.com

CORPORATE:
BRINKER RESTAURANT CORPORATION,
A VIRGINIA CORPORATION
3000 OLYMPUS BLVD.
DALLAS, TEXAS 75019
972.980.9917
www.brinker.com

09/23/2024

ISSUE FOR BID

THESE DOCUMENTS ARE FOR BIDDING PURPOSES ONLY. DO NOT USE FOR CONSTRUCTION.

RESTAURANT #CH1679
PROTOTYPE 18.5FS

CHILI'S TOOELE
951 N MAIN STREET
TOOELE, UT 84074

CLIENT: BRINKER RESTAURANT CORP.
A VIRGINIA CORPORATION

DATE	DESCRIPTION
6/27/2024	ISSUE FOR PERMIT
9/23/2024	ISSUE FOR BID

	DATE	DESCRIPTION
1	07.30.2024	CITY COMMENTS

PROJECT NUMBER:
CHI24007

SHEET TITLE:
WEATHER BARRIER INSTALLATION DETAILS

SHEET NUMBER:
A307

1 07.30.2024 CITY COMMENTS

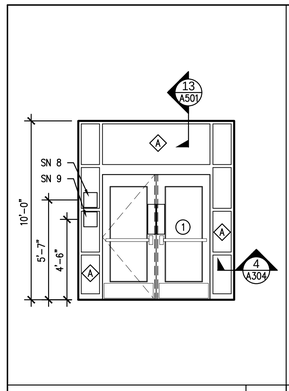

ELEVATION 1 — 1/4"=1'-0"

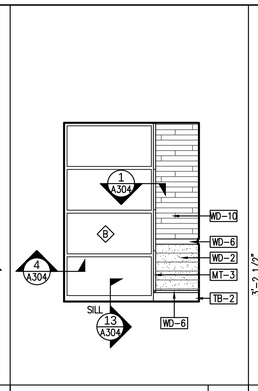

ELEVATION 2 — 1/4"=1'-0"

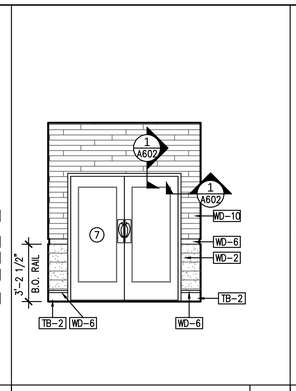

ELEVATION 3 — 1/4"=1'-0"

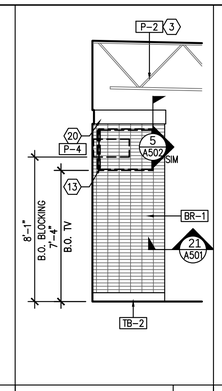

ELEVATION 4 — 1/4"=1'-0"

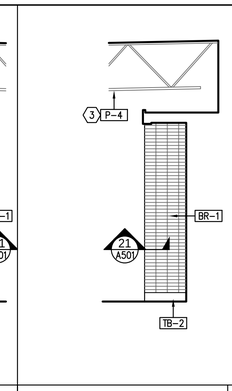

ELEVATION 5 — 1/4"=1'-0"

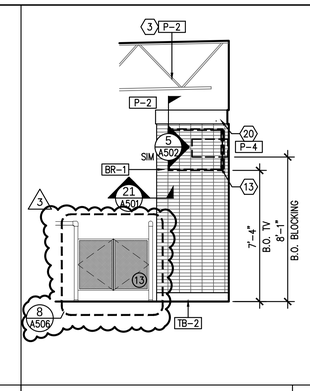

ELEVATION 6 — 1/4"=1'-0"

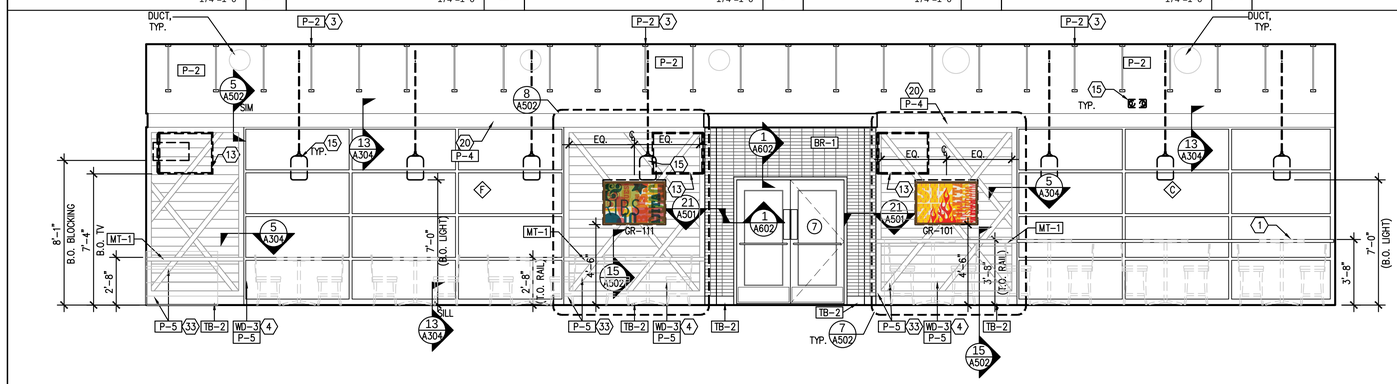

ELEVATION 7 — 1/4"=1'-0"

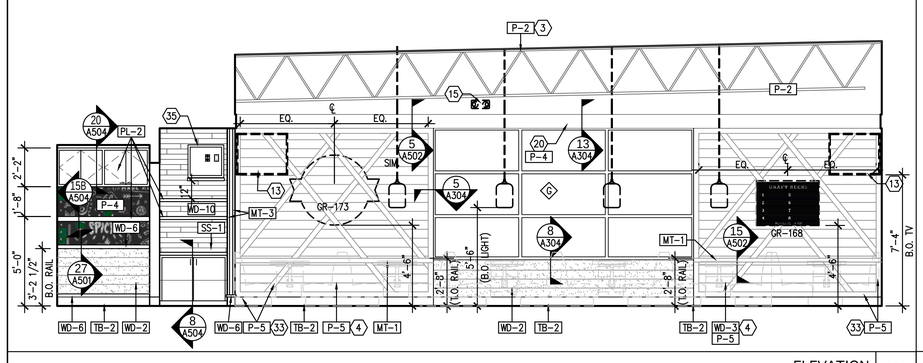

ELEVATION 8 — 1/4"=1'-0"

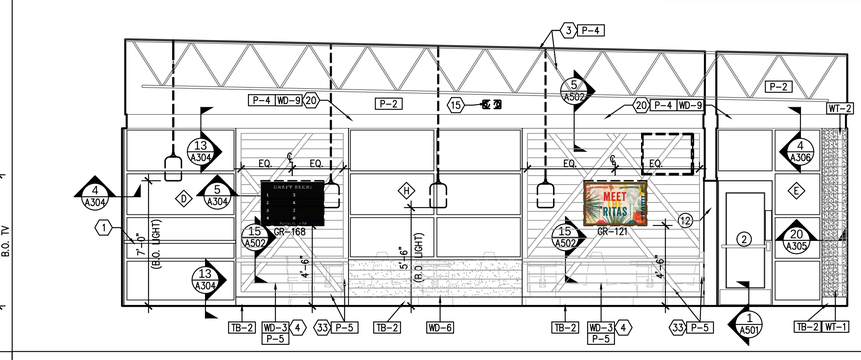

ELEVATION 9

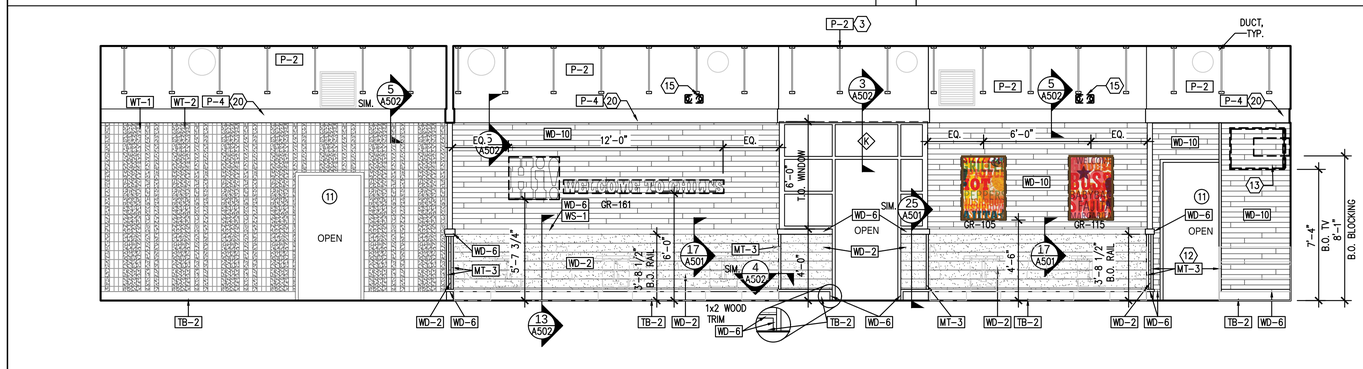

ELEVATION 10

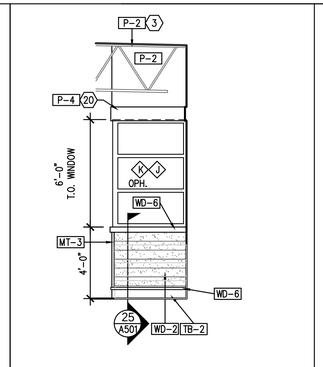

ELEVATION 11

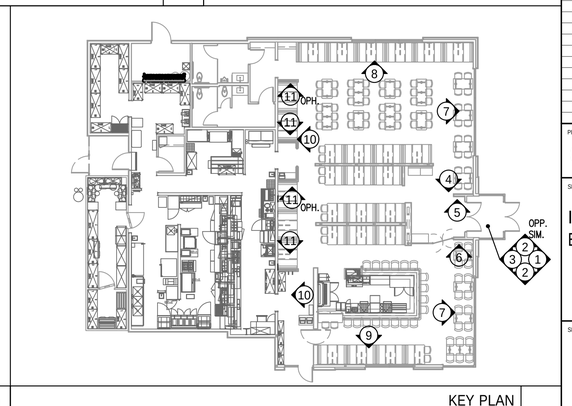

KEY PLAN

INTERIOR FINISH SCHEDULE

INTERIOR PAINT	
P-1	WARM STONE
P-2	URBANE BRONZE
P-4	TRICORN BLACK
P-5	REQUISITE GREY
P-6	SALUTE RED
P-7	CHATROOM
BRICK	
BR-1	BURGUNDY
WOOD PANELING	
WD-2	VINYL WOOD PLANK - CARBO
WD-3	SHEET PANELING
WD-4	DOUGLAS FIR
WD-5	CUSTOM MDF RED OAK VENEER PANEL
WD-6	RED OAK
WD-7	BEADBOARD
WD-9	PINE
WD-10	VINYL WOOD PLANK - CLASSIC OAK
WOOD STAIN	
WS-1	CUSTOM STAIN
FLOOR TILE	
FT-1	LIMESTONE PEARL MATTE
FT-2	ITALIAN OAK WOOD MATTE
WD-2	VINYL WOOD PLANK - CARBO
QT-1	DIABLO RED #0T01
WALL TILE	
WT-1	MUSTARD
WT-2	ARCHITECTURAL GREY
WT-4	ARCHITECTURAL GRAY
WT-5	ANTHRACITE
TILE BASE	
TB-2	CHAMBERLAIN
VB-1	VINYL BASE
QT-1	DIABLO RED #0T01
GROUT	
G-1	BLACK
G-2	CHARCOAL
G-3	BLACK "KERAPOXY"
G-4	IRON
SOLID SURFACE	
SS-1	SHARPHAM - WATERSTONE COLLECTION
SS-2	SERENE SAGE
PLASTIC PANEL	
PP-1	PEARL GRAY
PP-2	WHITE
METAL FINISHES	
MT-1	METAL CHAIR RAIL
MT-2	BLACK MALLEABLE IRON RAIL SYSTEM
MT-3	METAL CORNER GUARD
MT-4	WROUGHT IRON BLACK
MT-5	DILEX-AHKA 80 AE
CEILING	
CT-1	VINYL FACED GYPSUM CEILING PANEL
PL-1	EGGSHELL WHITE
PL-2	BLACK
PL-3	SLEEPING IN
GLASS	
GL-1	NIAGARA

GENERAL NOTES

1. ALL WALL CAPS AND WOOD TRIM INCLUDING THE WOOD TRIM LOCATED AT TRANSITION FROM WALL FINISH TO EXPOSED CEILING AND STRUCTURE ARE TO BE POPLAR, U.N.O. FINISH PER ELEVATIONS.
2. REFER TO A504 SHEETS FOR MILLWORK DETAILS.
3. "BY OWNER" SHALL MEAN ITEM FURNISHED BY OWNER – ASSEMBLED AND INSTALLED BY CONTRACTOR AS PART OF THE WORK FOR THIS CONTRACT.
4. "NOT IN CONTRACT" (NIC) SHALL MEAN ITEM PROVIDED AND INSTALLED BY OWNER UNDER SEPARATE CONTRACT.
5. REFER TO I102 FOR WALL MURALS, WALL GRAPHICS (GR), AND DECOR FURNISHINGS.
6. CHAIR RAIL AND WALL COVERINGS DO NOT CONTINUE BEHIND CORNER BOOTH.
7. FOR FRP SS CONNECTION, RE: 16/A501.
8. FOR FRP SS TO CEILING CONNECTION, RE: 18/A501.

KEY NOTES:

1. SAFETY RAIL (3/8"x2" TALL) TO MATCH STOREFRONT, RE: 2/A300.
2. BAR CROWN
3. ROOF TRUSS
4. 4'x10'x1/4" SHEET PANELING WITH 6" O.C. GROOVES
5. TRAY JACK, RE: 14/A504.
6. USB RECEPTACLE, RE: ELECTRICAL. STAINLESS STEEL PANEL, RE: KITCHENS.
7. LIGHT SWITCH BANK (DIMMER) RE: ELECTRICAL.
8. KITCHEN – CORNER GUARD OR END CAP, RE: 5/A501, RE: KITCHEN DRAWINGS.
9. LIQUOR CAGE BY OWNER INSTALLED BY G.C.
10. (2) 2x12 BLOCKING FOR SHELF SUPPORT.
11. G.C. TO INSTALL PENETRATION IN WALL FOR 2" PVC PIPE WITH METAL FLANGE ON BOTH SIDES OF WALL FOR ECOLAB TUBING. REF:19/A501
12. HOT ROLLED STEEL ANGLE. RE: 4/A502
13. TELEVISION, RE: A500
14. BASE TO BE INSTALLED AFTER STAINLESS STEEL PANEL IS INSTALLED.
15. LIGHT FIXTURE RE: ELECTRICAL
16. MIRROR BEYOND
17. THERMOSTAT, RE: MECHANICAL FLOOR PLAN
18. STAINLESS STEEL CLOSURE STRIP TO SEAL COOLER/ FREEZER TO WALL
19. UNISTRUT
20. 1x10 WOOD TRIM PAINTED P-4
21. FIRE SPRINKLER MONITOR CONTROL PANEL, PROVIDED BY BRINKER CONTRACTOR AND INSTALLED BY BRINKER CONTRACTOR, RE: ELECTRICAL
22. MOP SINK BY CONTRACTOR
23. UNPAINTED GYPSUM BOARD
24. SAFE
25. MECHANICAL HOOD, RE: MECHANICAL
26. SECURITY PANEL, RE: ELECTRICAL
27. WATERPROOF MEMBRANE, RE: 4/A501
28. ELECTRICAL PANELS, RE: ELECTRICAL
29. PROVIDE 1x4 WD-6 TRANSITION STRIP STAINED WS-1 ALONG TOP OF FRP
30. ELECTRICAL OUTLET, RE: ELECTRICAL
31. POST DETAIL, RE: 10/A501
32. 8"x8" RECESSED JUNCTION BOX RE: ELECTRICAL
33. ~~1x4 WOOD TRIM PAINTED P-6~~
34. STAINLESS STEEL ADHERED OVER CEMENT BOARD WITH MARLITE C551, PANEL PROVIDED BY OWNER
35. ~~MUSIC SYSTEM, RE: ELECTRICAL~~
36. FULL-HEIGHT CABINET. SHELVING BY OWNER. INSTALLED BY G.C., RE: 14/A504.
37. STAINLESS STEEL (N.I.C.)
38. LIGHTING CONTROLS, RE: ELECTRICAL
39. ROOF LADDER, RE: 5,10 AND 19/A142.
40. NOT USED
41. NOT USED
42. RECESSED MAGNETIC DOOR CONTACT PROVIDED BY SECURITY COMPANY
43. DETEX EXIT ALARM
44. FLY TRAP, RE: KITCHEN
45. IRON CHILI LOGO SCREEN, BY OWNER
46. 24"X36" ACCESS PANELS BY GC. PANELS TO MATCH ADJACENT FINISH.
47. G.C. TO INSTALL PENETRATION IN WALL FOR 2" PVC PIPE WITH METAL FLANGE ON BOTH SIDES OF WALL FOR ECOLAB TUBING. RE:19/A501
48. G.C. TO INSTALL TILE BACKER BOARD BEHIND TILE.
49. PROVIDE 2X12 BLOCKING, TOP AT 36"A.F.F. RE: 17/A504.
50. PROVIDED BY OWNER, INSTALLED BY G.C.; BOTTOM AT 80", PROVIDE BLOCKING AS REQUIRED.
51. 2X10, WS-1 FINISH

ARCHITECT:

DAVID SCOTT WINDLE, AIA

6201 CAMPUS CIRCLE DRIVE E.
IRVING, TEXAS 75038
TEL: 972.870.1288
WWW.IDSTUDIO4.COM
E-MAIL scottw@idstudio4.com

CORPORATE:
BRINKER RESTAURANT CORPORATION,
A VIRGINIA CORPORATION
3000 OLYMPUS BLVD.
DALLAS, TEXAS 75019
972.980.9917
www.brinker.com

09/23/2024

ISSUE FOR BID

THESE DOCUMENTS ARE FOR BIDDING PURPOSES ONLY. DO NOT USE FOR CONSTRUCTION.

RESTAURANT #CH1679
PROTOTYPE 18.5FS

CHILI'S TOOELE

951 N MAIN STREET
TOOELE, UT 84074

CLIENT: BRINKER RESTAURANT CORP.
A VIRGINIA CORPORATION

DATE	DESCRIPTION
6/27/2024	ISSUE FOR PERMIT
9/23/2024	ISSUE FOR BID

	DATE	DESCRIPTION
1	08.07.2024	CITY COMMENTS
3	09.10.2024	CITY COMMENTS

PROJECT NUMBER:
CHI24007

SHEET TITLE:
INTERIOR ELEVATIONS

SHEET NUMBER:
A401

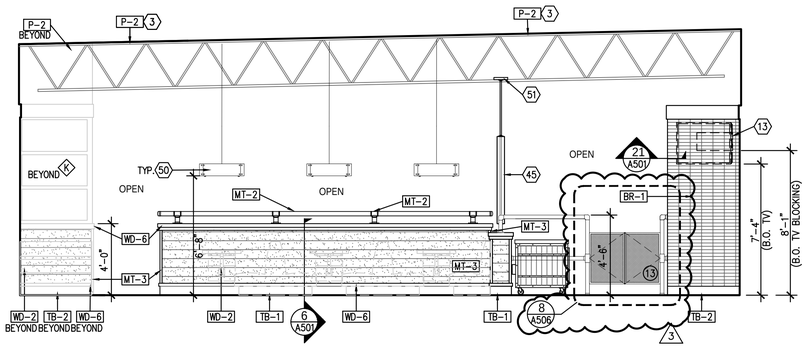

ELEVATION 1/4"=1'-0" 1

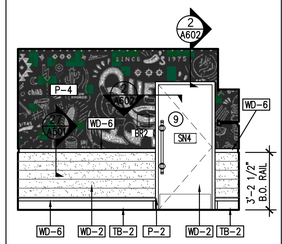

ELEVATION 1/4"=1'-0" 2

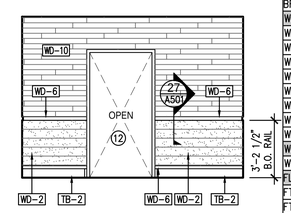

ELEVATION 1/4"=1'-0" 3

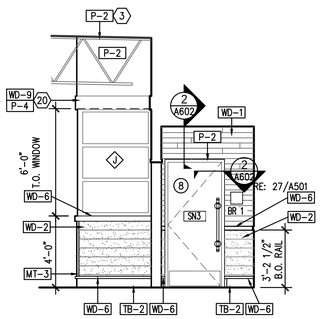

ELEVATION 1/4"=1'-0" 4

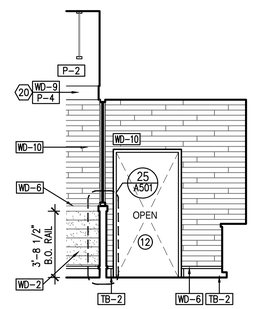

ELEVATION 1/4" = 1'-0" 5

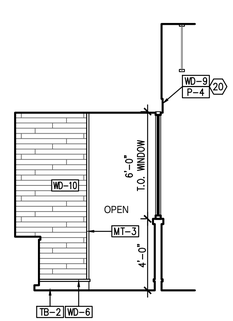

ELEVATION 1/4"=1'-0" 6

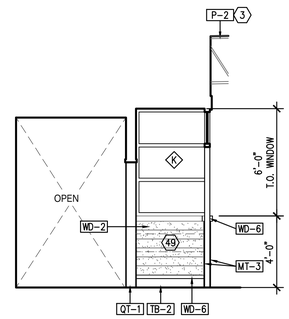

ELEVATION 1/4"=1'-0" 7

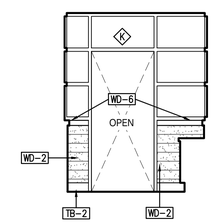

ELEVATION 1/4"=1'-0" 8

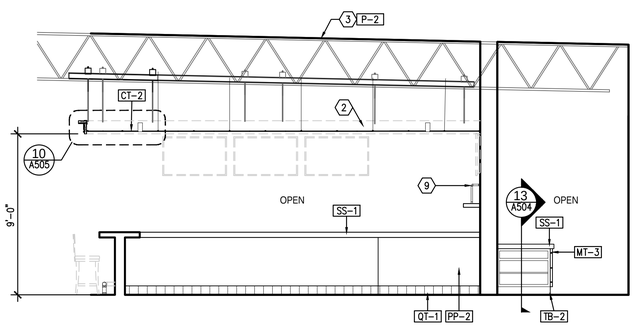

ELEVATION 1/4"=1'-0" 9

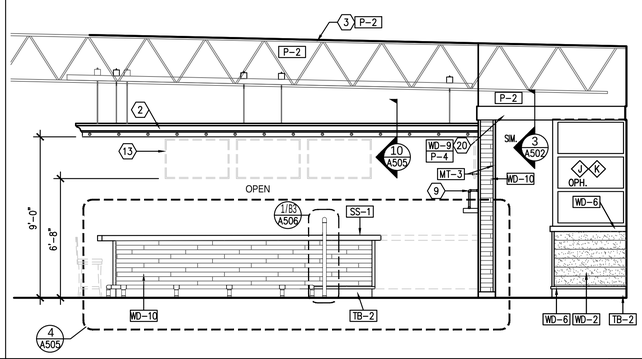

ELEVATION 1/4"=1'-0" 10

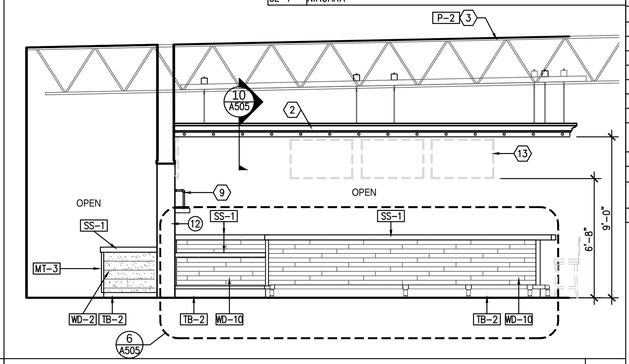

ELEVATION 1/4"=1'-0" 11

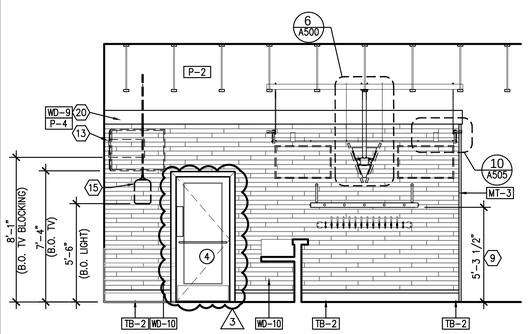

ELEVATION 1/4"=1'-0" 12

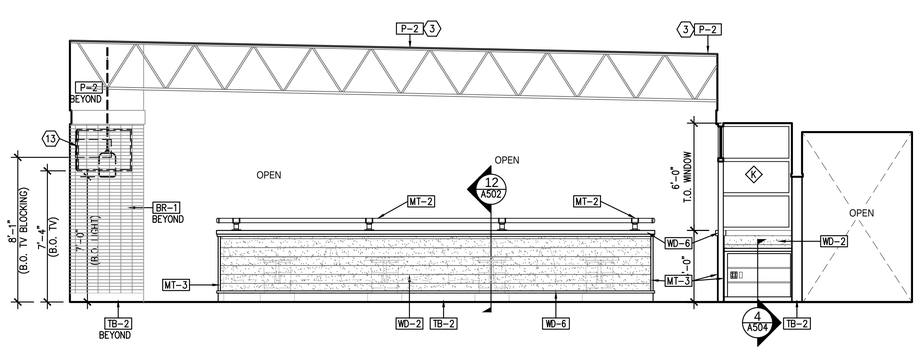

ELEVATION 1/4"=1'-0" 13

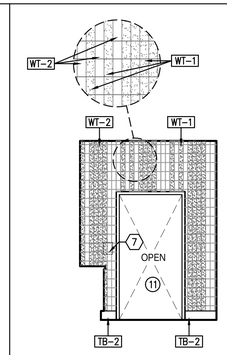

ELEVATION 1/4"=1'-0" 14

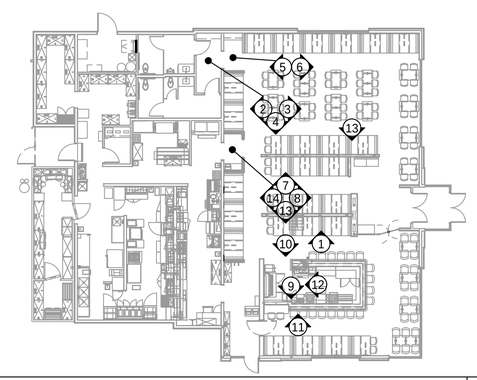

KEY PLAN

INTERIOR FINISH SCHEDULE

INTERIOR PAINT	
P-1	WARM STONE
P-2	URBANE BRONZE
P-4	TRICORN BLACK
P-5	REQUISITE GREY
P-6	SALUTE RED
P-7	CHATROOM
BRICK	
BR-1	BURGUNDY
WOOD PANELING	
WD-2	VINYL WOOD PLANK – CARBO
WD-3	SHEET PANELING
WD-4	DOUGLAS FIR
WD-5	CUSTOM MDF RED OAK VENEER PANEL
WD-6	RED OAK
WD-7	BEADBOARD
WD-9	PINE
WD-10	VINYL WOOD PLANK – CLASSIC OAK
WOOD STAIN	
WS-1	CUSTOM STAIN
FLOOR TILE	
FT-1	LIMESTONE PEARL MATTE
FT-2	ITALIAN OAK WOOD MATTE
WD-2	VINYL WOOD PLANK – CARBO
QT-1	DIABLO RED #0T01
WALL TILE	
WT-1	MUSTARD
WT-2	ARCHITECTURAL GREY
WT-4	ARCHITECTURAL GRAY
WT-5	ANTHRACITE
TILE BASE	
TB-2	CHAMBERLAIN
VB-1	VINYL BASE
QT-1	DIABLO RED #0T01
GROUT	
G-1	BLACK
G-2	CHARCOAL
G-3	BLACK "KERAPOXY"
G-4	IRON
SOLID SURFACE	
SS-1	SHARPHAM – WATERSTONE COLLECTION
SS-2	SERENE SAGE
PLASTIC PANEL	
PP-1	PEARL GRAY
PP-2	WHITE
METAL FINISHES	
MT-1	METAL CHAIR RAIL
MT-2	BLACK MALLEABLE IRON RAIL SYSTEM
MT-3	METAL CORNER GUARD
MT-4	WROUGHT IRON BLACK
MT-5	DILEX–AHKA 80 AE
CEILING	
CT-1	VINYL FACED GYPSUM CEILING PANEL
PL-1	EGGSHELL WHITE
PL-2	BLACK
PL-3	SLEEPING IN
GLASS	
GL-1	NIAGARA

GENERAL NOTES

1. ALL WALL CAPS AND WOOD TRIM INCLUDING THE WOOD TRIM LOCATED AT TRANSITION FROM WALL FINISH TO EXPOSED CEILING AND STRUCTURE ARE TO BE POPLAR, U.N.O. FINISH PER ELEVATIONS.
2. REFER TO A504 SHEETS FOR MILLWORK DETAILS.
3. "BY OWNER" SHALL MEAN ITEM FURNISHED BY OWNER – ASSEMBLED AND INSTALLED BY CONTRACTOR AS PART OF THE WORK FOR THIS CONTRACT.
4. "NOT IN CONTRACT" (NIC) SHALL MEAN ITEM PROVIDED AND INSTALLED BY OWNER UNDER SEPARATE CONTRACT.
5. REFER TO I102 FOR WALL MURALS, WALL GRAPHICS (GR), AND DECOR FURNISHINGS.
6. CHAIR RAIL AND WALL COVERINGS DO NOT CONTINUE BEHIND CORNER BOOTH.
7. FOR FRP SS CONNECTION, RE: 16/A501.
8. FOR FRP SS TO CEILING CONNECTION, RE: 18/A501.

KEY NOTES:

1. SAFETY RAIL (3/8"x2" TALL) TO MATCH STOREFRONT, RE: 2/A300.
2. BAR CROWN
3. ROOF TRUSS
4. 4'x10'x1/4" SHEET PANELING WITH 6" O.C. GROOVES
5. TRAY JACK, RE: 14/A504.
6. USB RECEPTACLE, RE: ELECTRICAL. STAINLESS STEEL PANEL, RE: KITCHENS.
7. LIGHT SWITCH BANK (DIMMER) RE: ELECTRICAL.
8. KITCHEN – CORNER GUARD OR END CAP, RE: 5/A501, RE: KITCHEN DRAWINGS.
9. LIQUOR CAGE BY OWNER INSTALLED BY G.C.
10. (2) 2x12 BLOCKING FOR SHELF SUPPORT.
11. G.C. TO INSTALL PENETRATION IN WALL FOR 2" PVC PIPE WITH METAL FLANGE ON BOTH SIDES OF WALL FOR ECOLAB TUBING. REF:19/A501
12. HOT ROLLED STEEL ANGLE. RE: 4/A502
13. TELEVISION, RE: A500
14. BASE TO BE INSTALLED AFTER STAINLESS STEEL PANEL IS INSTALLED.
15. LIGHT FIXTURE RE: ELECTRICAL
16. MIRROR BEYOND
17. THERMOSTAT, RE: MECHANICAL FLOOR PLAN
18. STAINLESS STEEL CLOSURE STRIP TO SEAL COOLER/ FREEZER TO WALL
19. UNISTRUT
20. 1x10 WOOD TRIM PAINTED P-4
21. FIRE SPRINKLER MONITOR CONTROL PANEL, PROVIDED BY BRINKER CONTRACTOR AND INSTALLED BY BRINKER CONTRACTOR, RE: ELECTRICAL
22. MOP SINK BY CONTRACTOR
23. UNPAINTED GYPSUM BOARD
24. SAFE
25. MECHANICAL HOOD, RE: MECHANICAL
26. SECURITY PANEL, RE: ELECTRICAL
27. WATERPROOF MEMBRANE, RE: 4/A501
28. ELECTRICAL PANELS, RE: ELECTRICAL
29. PROVIDE 1x4 WD-6 TRANSITION STRIP STAINED WS-1 ALONG TOP OF FRP
30. ELECTRICAL OUTLET, RE: ELECTRICAL
31. POST DETAIL, RE: 10/A501
32. 8"x8" RECESSED JUNCTION BOX RE: ELECTRICAL
33. 1x4 WOOD TRIM PAINTED P-5
34. STAINLESS STEEL ADHERED OVER CEMENT BOARD WITH MARLITE C551, PANEL PROVIDED BY OWNER
35. MUSIC SYSTEM RE: ELECTRICAL
36. FULL–HEIGHT CABINET. SHELVING BY OWNER. INSTALLED BY G.C., RE: 14/A504.
37. STAINLESS STEEL (N.I.C.)
38. LIGHTING CONTROLS, RE: ELECTRICAL
39. ROOF LADDER, RE: 5,10 AND 19/A142.
40. NOT USED
41. NOT USED
42. RECESSED MAGNETIC DOOR CONTACT PROVIDED BY SECURITY COMPANY
43. DETEX EXIT ALARM
44. FLY TRAP, RE: KITCHEN
45. IRON CHILI LOGO SCREEN, BY OWNER
46. 24"X36" ACCESS PANELS BY GC. PANELS TO MATCH ADJACENT FINISH.
47. G.C. TO INSTALL PENETRATION IN WALL FOR 2" PVC PIPE WITH METAL FLANGE ON BOTH SIDES OF WALL FOR ECOLAB TUBING. RE:19/A501
48. G.C. TO INSTALL TILE BACKER BOARD BEHIND TILE.
49. PROVIDE 2X12 BLOCKING, TOP AT 36"A.F.F. RE: 17/A504.
50. PROVIDED BY OWNER, INSTALLED BY G.C.; BOTTOM AT 80", PROVIDE BLOCKING AS REQUIRED.
51. 2X10, WS–1 FINISH

ARCHITECT:

DAVID SCOTT WINDLE, AIA

6201 CAMPUS CIRCLE DRIVE E.
IRVING, TEXAS 75038
TEL: 972.870.1288
WWW.IDSTUDIO4.COM
E-MAIL scottw@idstudio4.com

CORPORATE:
BRINKER RESTAURANT CORPORATION,
A VIRGINIA CORPORATION
3000 OLYMPUS BLVD.
DALLAS, TEXAS 75019
972.980.9917
www.brinker.com

09/23/2024

ISSUE FOR BID

THESE DOCUMENTS ARE FOR BIDDING PURPOSES ONLY. DO NOT USE FOR CONSTRUCTION.

RESTAURANT #CH1679
PROTOTYPE 18.5FCS

CHILI'S TOOELE
951 N MAIN STREET
TOOELE, UT 84074

CLIENT: BRINKER RESTAURANT CORP.
A VIRGINIA CORPORATION

DATE	DESCRIPTION
6/27/2024	ISSUE FOR PERMIT
9/23/2024	ISSUE FOR BID

	DATE	DESCRIPTION
1	08.07.2024	CITY COMMENTS
3	09.10.2024	CITY COMMENTS

PROJECT NUMBER:
CHI24007

SHEET TITLE:
INTERIOR ELEVATIONS

SHEET NUMBER:
A402

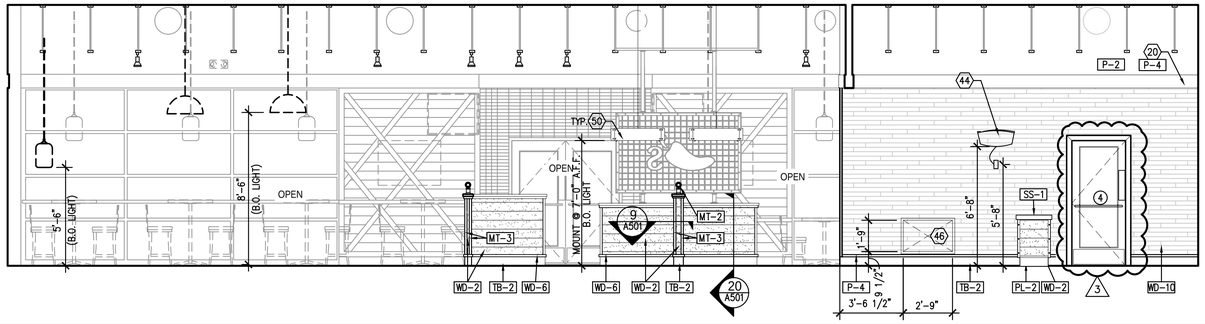

ELEVATION 1 — 1/4"=1'-0"

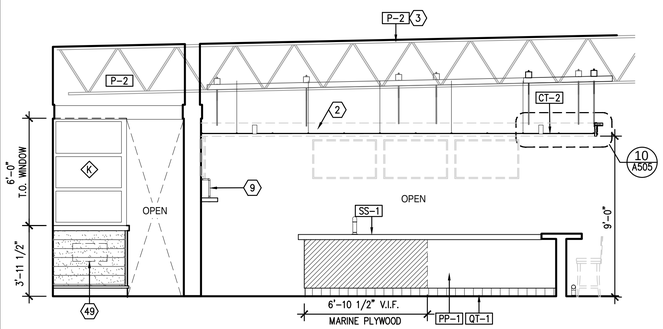

ELEVATION 2 — 1/4"=1'-0"

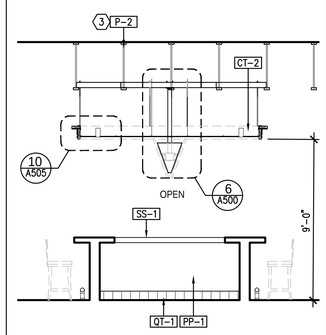

ELEVATION 3 — 1/4"=1'-0"

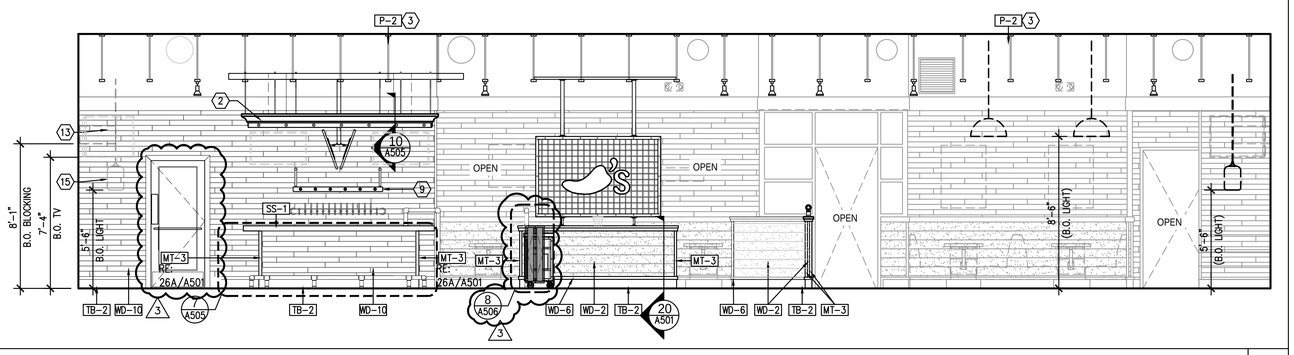

ELEVATION 4 — 1/4"=1'-0"

INTERIOR FINISH SCHEDULE

INTERIOR PAINT	
P-1	WARM STONE
P-2	URBANE BRONZE
P-4	TRICORN BLACK
P-5	REQUISITE GREY
P-6	SALUTE RED
P-7	CHATROOM
BRICK	
BR-1	BURGUNDY
WOOD PANELING	
WD-2	VINYL WOOD PLANK – CARBO
WD-3	SHEET PANELING
WD-4	DOUGLAS FIR
WD-5	CUSTOM MDF RED OAK VENEER PANEL
WD-6	RED OAK
WD-7	BEADBOARD
WD-9	PINE
WD-10	VINYL WOOD PLANK – CLASSIC OAK
WOOD STAIN	
WS-1	CUSTOM STAIN
FLOOR TILE	
FT-1	LIMESTONE PEARL MATTE
FT-2	ITALIAN OAK WOOD MATTE
WD-2	VINYL WOOD PLANK – CARBO
QT-1	DIABLO RED #0T01
WALL TILE	
WT-1	MUSTARD
WT-2	ARCHITECTURAL GREY
WT-4	ARCHITECTURAL GRAY
WT-5	ANTHRACITE
TILE BASE	
TB-2	CHAMBERLAIN
VB-1	VINYL BASE
QT-1	DIABLO RED #0T01
GROUT	
G-1	BLACK
G-2	CHARCOAL
G-3	BLACK "KERAPOXY"
G-4	IRON
SOLID SURFACE	
SS-1	SHARPHAM – WATERSTONE COLLECTION
SS-2	SERENE SAGE
PLASTIC PANEL	
PP-1	PEARL GRAY
PP-2	WHITE
METAL FINISHES	
MT-1	METAL CHAIR RAIL
MT-2	BLACK MALLEABLE IRON RAIL SYSTEM
MT-3	METAL CORNER GUARD
MT-4	WROUGHT IRON BLACK
MT-5	DILEX-AHKA 80 AE
CEILING	
CT-1	VINYL FACED GYPSUM CEILING PANEL
CT-2	AMERICAN TIN CEILING TILE
PLASTIC LAMINATE	
PL-1	EGGSHELL WHITE
PL-2	BLACK
PL-3	SLEEPING IN
GLASS	
GL-1	NIAGARA

GENERAL NOTES

1. ALL WALL CAPS AND WOOD TRIM INCLUDING THE WOOD TRIM LOCATED AT TRANSITION FROM WALL FINISH TO EXPOSED CEILING AND STRUCTURE ARE TO BE POPLAR, U.N.O. FINISH PER ELEVATIONS.
2. REFER TO A504 SHEETS FOR MILLWORK DETAILS.
3. "BY OWNER" SHALL MEAN ITEM FURNISHED BY OWNER – ASSEMBLED AND INSTALLED BY CONTRACTOR AS PART OF THE WORK FOR THIS CONTRACT.
4. "NOT IN CONTRACT" (NIC) SHALL MEAN ITEM PROVIDED AND INSTALLED BY OWNER UNDER SEPARATE CONTRACT.
5. REFER TO I102 FOR WALL MURALS, WALL GRAPHICS (GR), AND DECOR FURNISHINGS.
6. CHAIR RAIL AND WALL COVERINGS DO NOT CONTINUE BEHIND CORNER BOOTH.
7. FOR FRP SS CONNECTION, RE: 16/A501.
8. FOR FRP SS TO CEILING CONNECTION, RE: 18/A501.

KEY NOTES:

1. SAFETY RAIL (3/8"x2" TALL) TO MATCH STOREFRONT, RE: 2/A300.
2. BAR CROWN
3. ROOF TRUSS
4. 4'x10'x1/4" SHEET PANELING WITH 6" O.C. GROOVES
5. TRAY JACK, RE: 14/A504.
6. USB RECEPTACLE, RE: ELECTRICAL. STAINLESS STEEL PANEL, RE: KITCHENS.
7. LIGHT SWITCH BANK (DIMMER) RE: ELECTRICAL.
8. KITCHEN – CORNER GUARD OR END CAP, RE: 5/A501, RE: KITCHEN DRAWINGS.
9. LIQUOR CAGE BY OWNER INSTALLED BY G.C.
10. (2) 2x12 BLOCKING FOR SHELF SUPPORT.
11. G.C. TO INSTALL PENETRATION IN WALL FOR 2" PVC PIPE WITH METAL FLANGE ON BOTH SIDES OF WALL FOR ECOLAB TUBING. REF:19/A501
12. HOT ROLLED STEEL ANGLE. RE: 4/A502
13. TELEVISION, RE: A500
14. BASE TO BE INSTALLED AFTER STAINLESS STEEL PANEL IS INSTALLED.
15. LIGHT FIXTURE RE: ELECTRICAL
16. MIRROR BEYOND
17. THERMOSTAT, RE: MECHANICAL FLOOR PLAN
18. STAINLESS STEEL CLOSURE STRIP TO SEAL COOLER/ FREEZER TO WALL
19. UNISTRUT
20. 1x10 WOOD TRIM PAINTED P-4
21. FIRE SPRINKLER MONITOR CONTROL PANEL, PROVIDED BY BRINKER CONTRACTOR AND INSTALLED BY BRINKER CONTRACTOR, RE: ELECTRICAL
22. MOP SINK BY CONTRACTOR
23. UNPAINTED GYPSUM BOARD
24. SAFE
25. MECHANICAL HOOD, RE: MECHANICAL
26. SECURITY PANEL, RE: ELECTRICAL
27. WATERPROOF MEMBRANE, RE: 4/A501
28. ELECTRICAL PANELS, RE: ELECTRICAL
29. PROVIDE 1x4 WD-6 TRANSITION STRIP STAINED WS-1 ALONG TOP OF FRP
30. ELECTRICAL OUTLET, RE: ELECTRICAL
31. POST DETAIL, RE: 10/A501
32. 8"x8" RECESSED JUNCTION BOX RE: ELECTRICAL
33. 1x4 WOOD TRIM PAINTED P-5
34. STAINLESS STEEL ADHERED OVER CEMENT BOARD WITH MARLITE C551, PANEL PROVIDED BY OWNER
35. MUSIC SYSTEM, RE: ELECTRICAL
36. FULL-HEIGHT CABINET. SHELVING BY OWNER. INSTALLED BY G.C., RE: 14/A504.
37. STAINLESS STEEL (N.I.C.)
38. LIGHTING CONTROLS, RE: ELECTRICAL
39. ROOF LADDER, RE: 5,10 AND 19/A142.
40. NOT USED
41. NOT USED
42. RECESSED MAGNETIC DOOR CONTACT PROVIDED BY SECURITY COMPANY
43. DETEX EXIT ALARM
44. FLY TRAP, RE: KITCHEN
45. IRON CHILI LOGO SCREEN, BY OWNER
46. 24"X36" ACCESS PANELS BY GC. PANELS TO MATCH ADJACENT FINISH.
47. G.C. TO INSTALL PENETRATION IN WALL FOR 2" PVC PIPE WITH METAL FLANGE ON BOTH SIDES OF WALL FOR ECOLAB TUBING. RE:19/A501
48. G.C. TO INSTALL TILE BACKER BOARD BEHIND TILE.
49. PROVIDE 2X12 BLOCKING, TOP AT 36"A.F.F. RE: 17/A504.
50. PROVIDED BY OWNER, INSTALLED BY G.C.; BOTTOM AT 80", PROVIDE BLOCKING AS REQUIRED.
51. 2X10, WS-1 FINISH

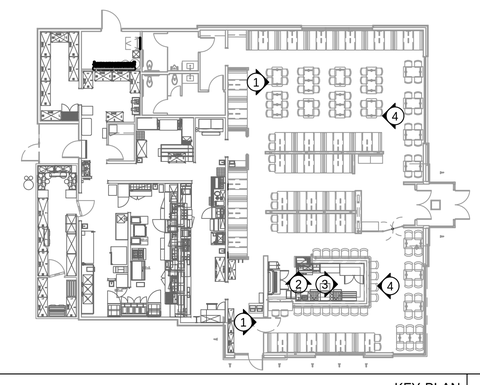

KEY PLAN

ARCHITECT:

DAVID SCOTT WINDLE, AIA

6201 CAMPUS CIRCLE DRIVE E.
IRVING, TEXAS 75038
TEL: 972.870.1288
WWW.IDSTUDIO4.COM
E-MAIL scottw@idstudio4.com

CORPORATE:
BRINKER RESTAURANT CORPORATION,
A VIRGINIA CORPORATION
3000 OLYMPUS BLVD.
DALLAS, TEXAS 75019
972.980.9917
www.brinker.com

09/23/2024
ISSUE FOR BID
THESE DOCUMENTS ARE FOR BIDDING PURPOSES ONLY. DO NOT USE FOR CONSTRUCTION.

RESTAURANT #CH1679
PROTOTYPE 18.5FS

CHILI'S TOOELE

951 N MAIN STREET
TOOELE, UT 84074

CLIENT: BRINKER RESTAURANT CORP.
A VIRGINIA CORPORATION

Xref .\3

DATE	DESCRIPTION
6/27/2024	ISSUE FOR PERMIT
9/23/2024	ISSUE FOR BID

#	DATE	DESCRIPTION
1	08.07.2024	CITY COMMENTS
3	09.10.2024	CITY COMMENTS

PROJECT NUMBER:
CHI24007

SHEET TITLE:
INTERIOR ELEVATIONS

SHEET NUMBER:
A403

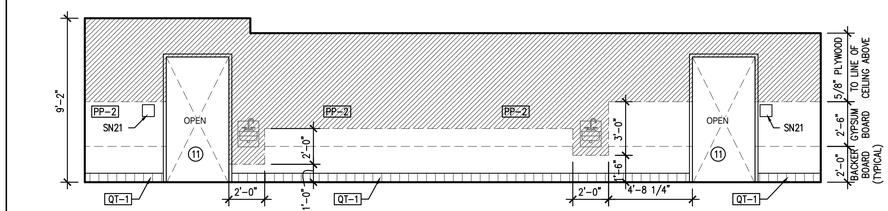

ELEVATION 1 1/4"=1'-0"

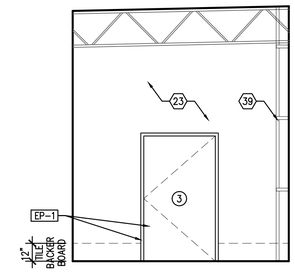

ELEVATION 2 1/4"=1'-0"

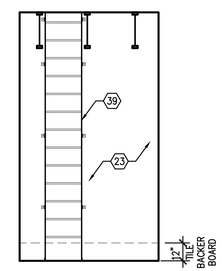

ELEVATION 3 1/4"=1'-0"

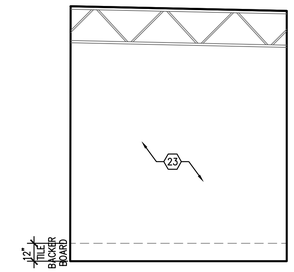

ELEVATION 4 1/4"=1'-0"

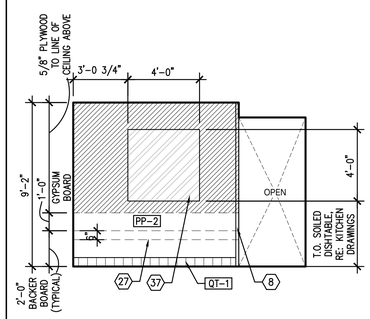

ELEVATION 5 1/4"=1'-0"

NOTE: DETEX ALARM SHALL BE INSTALLED BY A "BASS-SECURITY" TECHNICIAN. GENERAL CONTRACTOR SHALL COORDINATE WITH "BRINKER" INSTALLATION OF ANY ADDITIONAL ELECTRICAL DEVICES/ CONDUITS NEEDED THAT WILL NOT BE PROVIDED BY "BASS-SECURITY" FOR PROPER OPERATION OF DETEX SYSTEM.

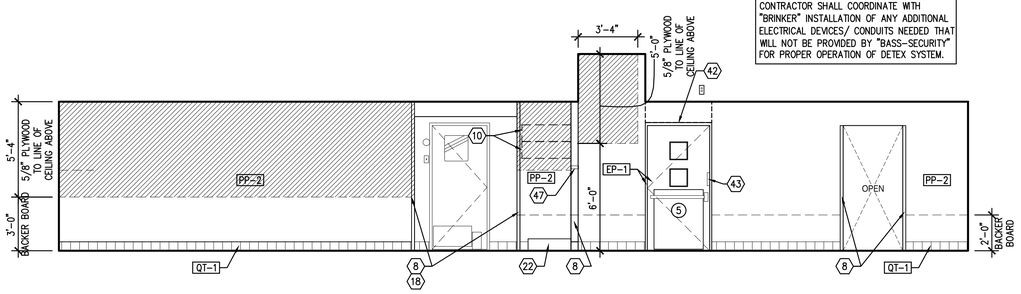

ELEVATION 6 1/4"=1'-0"

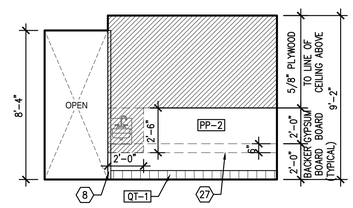

ELEVATION 7 1/4"=1'-0"

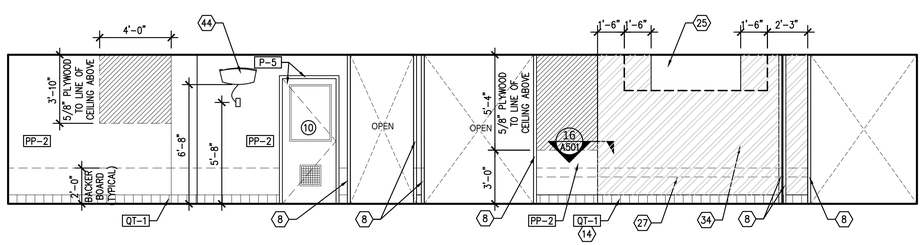

ELEVATION 8 1/4"=1'-0"

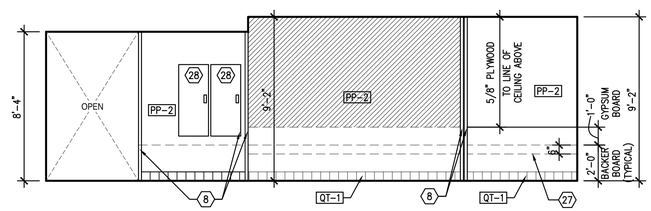

ELEVATION 9 1/4"=1'-0"

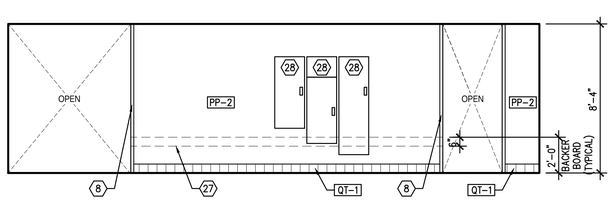

ELEVATION 10 1/4"=1'-0"

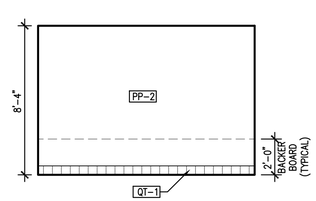

ELEVATION 11 1/4"=1'-0"

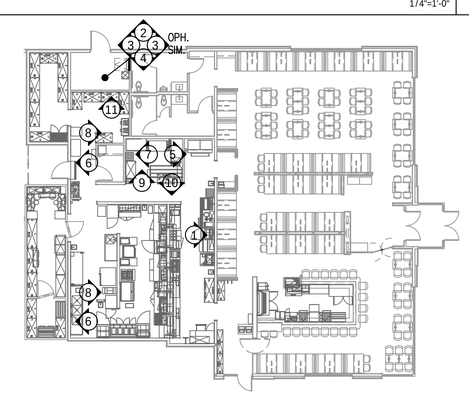

KEY PLAN

GENERAL NOTES

1. ALL WALL CAPS AND WOOD TRIM INCLUDING THE WOOD TRIM LOCATED AT TRANSITION FROM WALL FINISH TO EXPOSED CEILING AND STRUCTURE ARE TO BE POPLAR, U.N.O. FINISH PER ELEVATIONS.
2. REFER TO A504 SHEETS FOR MILLWORK DETAILS.
3. "BY OWNER" SHALL MEAN ITEM FURNISHED BY OWNER – ASSEMBLED AND INSTALLED BY CONTRACTOR AS PART OF THE WORK FOR THIS CONTRACT.
4. "NOT IN CONTRACT" (NIC) SHALL MEAN ITEM PROVIDED AND INSTALLED BY OWNER UNDER SEPARATE CONTRACT.
5. REFER TO I102 FOR WALL MURALS, WALL GRAPHICS (GR), AND DECOR FURNISHINGS.
6. CHAIR RAIL AND WALL COVERINGS DO NOT CONTINUE BEHIND CORNER BOOTH.
7. FOR FRP SS CONNECTION, RE: 16/A501.
8. FOR FRP SS TO CEILING CONNECTION, RE: 18/A501.

KEY NOTES:

1. SAFETY RAIL (3/8"x2" TALL) TO MATCH STOREFRONT, RE: 2/A300.
2. BAR CROWN
3. ROOF TRUSS
4. 4'x10'x1/4" SHEET PANELING WITH 6" O.C. GROOVES
5. TRAY JACK, RE: 14/A504.
6. USB RECEPTACLE, RE: ELECTRICAL. STAINLESS STEEL PANEL, RE: KITCHENS.
7. LIGHT SWITCH BANK (DIMMER) RE: ELECTRICAL.
8. KITCHEN – CORNER GUARD OR END CAP, RE: 5/A501, RE: KITCHEN DRAWINGS.
9. LIQUOR CAGE BY OWNER INSTALLED BY G.C.
10. (2) 2x12 BLOCKING FOR SHELF SUPPORT.
11. G.C. TO INSTALL PENETRATION IN WALL FOR 2" PVC PIPE WITH METAL FLANGE ON BOTH SIDES OF WALL FOR ECOLAB TUBING. REF:19/A501
12. HOT ROLLED STEEL ANGLE. RE: 4/A502
13. TELEVISION, RE: A500
14. BASE TO BE INSTALLED AFTER STAINLESS STEEL PANEL IS INSTALLED.
15. LIGHT FIXTURE RE: ELECTRICAL
16. MIRROR BEYOND
17. THERMOSTAT, RE: MECHANICAL FLOOR PLAN
18. STAINLESS STEEL CLOSURE STRIP TO SEAL COOLER/ FREEZER TO WALL
19. UNISTRUT
20. 1x10 WOOD TRIM PAINTED P-4
21. FIRE SPRINKLER MONITOR CONTROL PANEL, PROVIDED BY BRINKER CONTRACTOR AND INSTALLED BY BRINKER CONTRACTOR, RE: ELECTRICAL
22. MOP SINK BY CONTRACTOR
23. UNPAINTED GYPSUM BOARD
24. SAFE
25. MECHANICAL HOOD, RE: MECHANICAL
26. SECURITY PANEL, RE: ELECTRICAL
27. WATERPROOF MEMBRANE, RE: 4/A501
28. ELECTRICAL PANELS, RE: ELECTRICAL
29. PROVIDE 1x4 WD-6 TRANSITION STRIP STAINED WS-1 ALONG TOP OF FRP
30. ELECTRICAL OUTLET, RE: ELECTRICAL
31. POST DETAIL, RE: 10/A501
32. 8"x8" RECESSED JUNCTION BOX RE: ELECTRICAL
33. 1x4 WOOD TRIM PAINTED P-6
34. STAINLESS STEEL ADHERED OVER CEMENT BOARD WITH MARLITE C551, PANEL PROVIDED BY OWNER
35. MUSIC SYSTEM, RE: ELECTRICAL
36. FULL-HEIGHT CABINET. SHELVING BY OWNER. INSTALLED BY G.C., RE: 14/A504.
37. STAINLESS STEEL (N.I.C.)
38. LIGHTING CONTROLS, RE: ELECTRICAL
39. ROOF LADDER, RE: 5,10 AND 19/A142.
40. NOT USED
41. NOT USED
42. RECESSED MAGNETIC DOOR CONTACT PROVIDED BY SECURITY COMPANY
43. DETEX EXIT ALARM
44. FLY TRAP, RE: KITCHEN
45. IRON CHILI LOGO SCREEN, BY OWNER
46. 24"X36" ACCESS PANELS BY GC. PANELS TO MATCH ADJACENT FINISH.
47. G.C. TO INSTALL PENETRATION IN WALL FOR 2" PVC PIPE WITH METAL FLANGE ON BOTH SIDES OF WALL FOR ECOLAB TUBING. RE:19/A501
48. G.C. TO INSTALL TILE BACKER BOARD BEHIND TILE.
49. PROVIDE 2X12 BLOCKING, TOP AT 36"A.F.F. RE: 17/A504.
50. PROVIDED BY OWNER, INSTALLED BY G.C.; BOTTOM AT 80", PROVIDE BLOCKING AS REQUIRED.
51. 2X10, WS-1 FINISH

INTERIOR FINISH SCHEDULE

INTERIOR PAINT	
P-1	WARM STONE
P-2	URBANE BRONZE
P-4	TRICORN BLACK
P-5	REQUISITE GREY
P-6	SALUTE RED
P-7	CHATROOM
VB-1	VINYL BASE
QT-1	DIABLO RED #QT01
GROUT	
G-1	BLACK
G-2	CHARCOAL
G-3	BLACK "KERAPOXY"
G-4	IRON
SOLID SURFACE	
SS-1	SHARPHAM – WATERSTONE COLLECTION
SS-2	SERENE SAGE
PLASTIC PANEL	
PP-1	PEARL GRAY
PP-2	WHITE
METAL FINISHES	
MT-1	METAL CHAIR RAIL
MT-2	BLACK MALLEABLE IRON RAIL SYSTEM
MT-3	METAL CORNER GUARD
MT-4	WROUGHT IRON BLACK
MT-5	DILEX-AHKA 80 AE
CEILING	
CT-1	VINYL FACED GYPSUM CEILING PANEL
CT-2	AMERICAN TIN CEILING TILE
PLASTIC LAMINATE	
PL-1	EGGSHELL WHITE
PL-2	BLACK
PL-3	SLEEPING IN
GLASS	
GL-1	NIAGARA

ARCHITECT:

DAVID SCOTT WINDLE, AIA

6201 CAMPUS CIRCLE DRIVE E.
IRVING, TEXAS 75038
TEL: 972.870.1288
WWW.IDSTUDIO4.COM
E-MAIL scottw@idstudio4.com

CORPORATE:
BRINKER RESTAURANT CORPORATION,
A VIRGINIA CORPORATION
3000 OLYMPUS BLVD.
DALLAS, TEXAS 75019
972.980.9917
www.brinker.com

09/23/2024

ISSUE FOR BID

THESE DOCUMENTS ARE FOR BIDDING PURPOSES ONLY. DO NOT USE FOR CONSTRUCTION.

RESTAURANT #CH1679
PROTOTYPE 18.5FS

CHILI'S TOOELE
951 N MAIN STREET
TOOELE, UT 84074

CLIENT: BRINKER RESTAURANT CORP.
A VIRGINIA CORPORATION

DATE	DESCRIPTION
6/27/2024	ISSUE FOR PERMIT
9/23/2024	ISSUE FOR BID

	DATE	DESCRIPTION
1	08.07.2024	CITY COMMENTS

PROJECT NUMBER:
CHI24007

SHEET TITLE:
INTERIOR ELEVATIONS

SHEET NUMBER:
A404

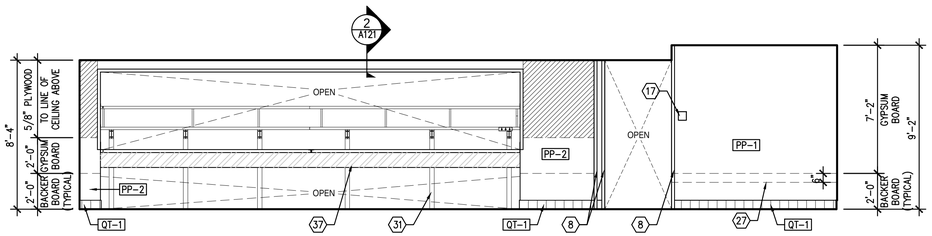

ELEVATION 1 — 1/4"=1'-0"

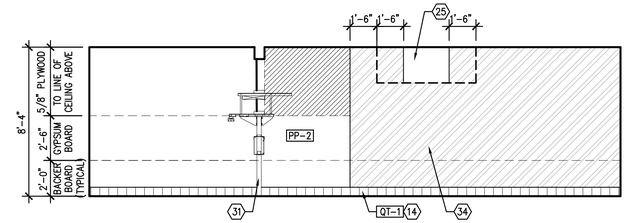

ELEVATION 2 — 1/4"=1'-0"

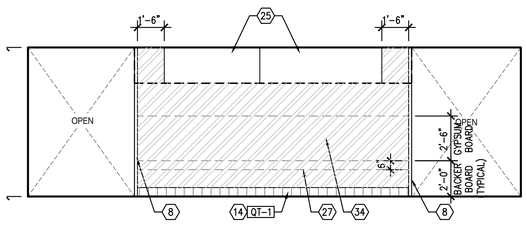

ELEVATION 3 — 1/4"=1'-0"

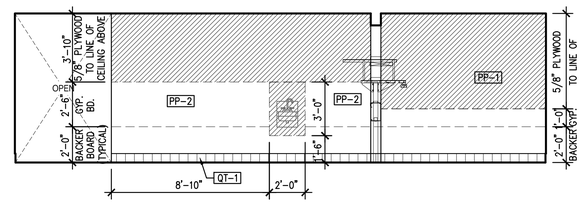

ELEVATION 4 — 1/4"=1'-0"

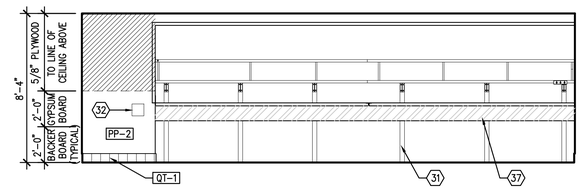

ELEVATION 5 — 1/4"=1'-0"

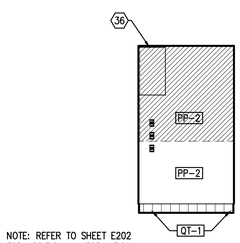

NOTE: REFER TO SHEET E202 FOR ADDITIONAL INFORMATION.

OFFICE 6 — 1/4"=1'-0"

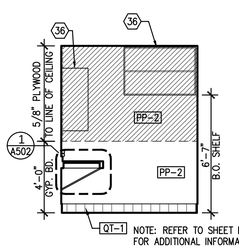

NOTE: REFER TO SHEET E202 FOR ADDITIONAL INFORMATION.

OFFICE 7 — 1/4"=1'-0"

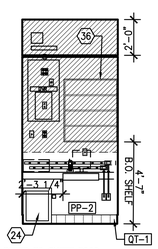

NOTE: REFER TO SHEET E202 FOR ADDITIONAL INFORMATION.

OFFICE 8 — 1/4"=1'-0"

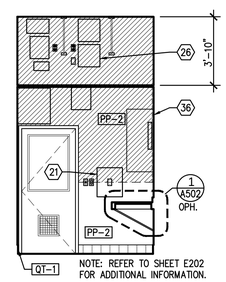

NOTE: REFER TO SHEET E202 FOR ADDITIONAL INFORMATION.

OFFICE 9 — 1/4"=1'-0"

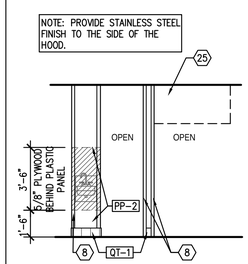

ELEVATION 10 — 1/4"=1'-0"

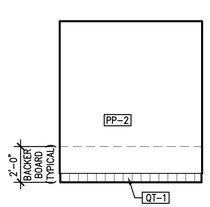

ELEVATION 11 — 1/4"=1'-0"

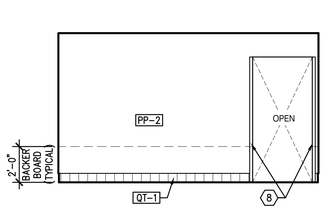

ELEVATION 12 — 1/4"=1'-0"

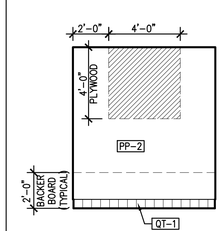

ELEVATION 13 — 1/4"=1'-0"

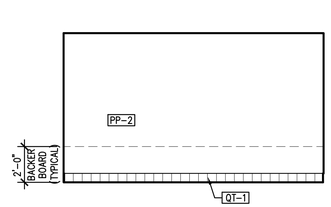

ELEVATION 14 — 1/4"=1'-0"

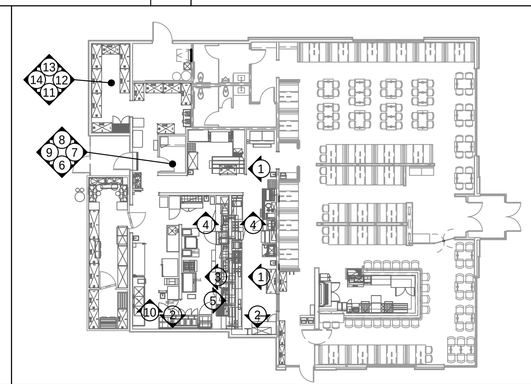

KEY PLAN

GENERAL NOTES

1. ALL WALL CAPS AND WOOD TRIM INCLUDING THE WOOD TRIM LOCATED AT TRANSITION FROM WALL FINISH TO EXPOSED CEILING AND STRUCTURE ARE TO BE POPLAR, U.N.O. FINISH PER ELEVATIONS.
2. REFER TO A504 SHEETS FOR MILLWORK DETAILS.
3. "BY OWNER" SHALL MEAN ITEM FURNISHED BY OWNER – ASSEMBLED AND INSTALLED BY CONTRACTOR AS PART OF THE WORK FOR THIS CONTRACT.
4. "NOT IN CONTRACT" (NIC) SHALL MEAN ITEM PROVIDED AND INSTALLED BY OWNER UNDER SEPARATE CONTRACT.
5. REFER TO I102 FOR WALL MURALS, WALL GRAPHICS (GR), AND DECOR FURNISHINGS.
6. CHAIR RAIL AND WALL COVERINGS DO NOT CONTINUE BEHIND CORNER BOOTH.
7. FOR FRP SS CONNECTION, RE: 16/A501.
8. FOR FRP SS TO CEILING CONNECTION, RE: 18/A501.

KEY NOTES:

1. SAFETY RAIL (3/8"x2" TALL) TO MATCH STOREFRONT, RE: 2/A.300.
2. BAR CROWN
3. ROOF TRUSS
4. 4'x10'x1/4" SHEET PANELING WITH 6" O.C. GROOVES
5. TRAY JACK, RE: 14/A504.
6. USB RECEPTACLE, RE: ELECTRICAL. STAINLESS STEEL PANEL, RE: KITCHENS.
7. LIGHT SWITCH BANK (DIMMER) RE: ELECTRICAL.
8. KITCHEN – CORNER GUARD OR END CAP, RE: 5/A501, RE: KITCHEN DRAWINGS.
9. LIQUOR CAGE BY OWNER INSTALLED BY G.C.
10. (2) 2x12 BLOCKING FOR SHELF SUPPORT.
11. G.C. TO INSTALL PENETRATION IN WALL FOR 2" PVC PIPE WITH METAL FLANGE ON BOTH SIDES OF WALL FOR ECOLAB TUBING. REF:19/A501
12. HOT ROLLED STEEL ANGLE. RE: 4/A502
13. TELEVISION, RE: A500
14. BASE TO BE INSTALLED AFTER STAINLESS STEEL PANEL IS INSTALLED.
15. LIGHT FIXTURE RE: ELECTRICAL
16. MIRROR BEYOND
17. THERMOSTAT, RE: MECHANICAL FLOOR PLAN
18. STAINLESS STEEL CLOSURE STRIP TO SEAL COOLER/ FREEZER TO WALL
19. UNISTRUT
20. 1x10 WOOD TRIM PAINTED P–4
21. FIRE SPRINKLER MONITOR CONTROL PANEL, PROVIDED BY BRINKER CONTRACTOR AND INSTALLED BY BRINKER CONTRACTOR, RE: ELECTRICAL
22. MOP SINK BY CONTRACTOR
23. UNPAINTED GYPSUM BOARD
24. SAFE
25. MECHANICAL HOOD, RE: MECHANICAL
26. SECURITY PANEL, RE: ELECTRICAL
27. WATERPROOF MEMBRANE, RE: 4/A501
28. ELECTRICAL PANELS, RE: ELECTRICAL
29. PROVIDE 1x4 WD–6 TRANSITION STRIP STAINED WS–1 ALONG TOP OF FRP
30. ELECTRICAL OUTLET, RE: ELECTRICAL
31. POST DETAIL, RE: 10/A501
32. 8"x8" RECESSED JUNCTION BOX RE: ELECTRICAL
33. ~~1x4 WOOD TRIM PAINTED P–6~~
34. STAINLESS STEEL ADHERED OVER CEMENT BOARD WITH MARLITE C551, PANEL PROVIDED BY OWNER
35. MUSIC SYSTEM, RE: ELECTRICAL
36. FULL–HEIGHT CABINET. SHELVING BY OWNER. INSTALLED BY G.C., RE: 14/A504.
37. STAINLESS STEEL (N.I.C.)
38. LIGHTING CONTROLS, RE: ELECTRICAL
39. ROOF LADDER, RE: 5,10 AND 19/A142.
40. NOT USED
41. NOT USED
42. RECESSED MAGNETIC DOOR CONTACT PROVIDED BY SECURITY COMPANY
43. DETEX EXIT ALARM
44. FLY TRAP, RE: KITCHEN
45. IRON CHILI LOGO SCREEN, BY OWNER
46. 24"X36" ACCESS PANELS BY GC. PANELS TO MATCH ADJACENT FINISH.
47. G.C. TO INSTALL PENETRATION IN WALL FOR 2" PVC PIPE WITH METAL FLANGE ON BOTH SIDES OF WALL FOR ECOLAB TUBING. RE:19/A501
48. G.C. TO INSTALL TILE BACKER BOARD BEHIND TILE.
49. PROVIDE 2X12 BLOCKING, TOP AT 36"A.F.F. RE: 17/A504.
50. PROVIDED BY OWNER, INSTALLED BY G.C.; BOTTOM AT 80", PROVIDE BLOCKING AS REQUIRED.
51. 2X10, WS–1 FINISH

INTERIOR FINISH SCHEDULE

INTERIOR PAINT	
P–1	WARM STONE
P–2	URBANE BRONZE
P–4	TRICORN BLACK
P–5	REQUISITE GREY
P–6	SALUTE RED
P–7	CHATROOM
VB–1	VINYL BASE
QT–1	DIABLO RED #0T01
GROUT	
G–1	BLACK
G–2	CHARCOAL
G–3	BLACK "KERAPOXY"
G–4	IRON
SOLID SURFACE	
SS–1	SHARPHAM – WATERSTONE COLLECTION
SS–2	SERENE SAGE
PLASTIC PANEL	
PP–1	PEARL GRAY
PP–2	WHITE
METAL FINISHES	
MT–1	METAL CHAIR RAIL
MT–2	BLACK MALLEABLE IRON RAIL SYSTEM
MT–3	METAL CORNER GUARD
MT–4	WROUGHT IRON BLACK
MT–5	DILEX–AHKA 80 AE
CEILING	
CT–1	VINYL FACED GYPSUM CEILING PANEL
CT–2	AMERICAN TIN CEILING TILE
PLASTIC LAMINATE	
PL–1	EGGSHELL WHITE
PL–2	BLACK
PL–3	SLEEPING IN
GLASS	
GL–1	NIAGARA

ARCHITECT:

DAVID SCOTT WINDLE, AIA

6201 CAMPUS CIRCLE DRIVE E.
IRVING, TEXAS 75038
TEL: 972.870.1288
WWW.IDSTUDIO4.COM
E-MAIL scottw@idstudio4.com

CORPORATE:
BRINKER RESTAURANT CORPORATION,
A VIRGINIA CORPORATION
3000 OLYMPUS BLVD.
DALLAS, TEXAS 75019
972.980.9917
www.brinker.com

09/23/2024
ISSUE FOR BID
THESE DOCUMENTS ARE FOR BIDDING PURPOSES ONLY. DO NOT USE FOR CONSTRUCTION.

RESTAURANT #CH1679
PROTOTYPE 18.5FS

CHILI'S TOOELE
951 N MAIN STREET
TOOELE, UT 84074

CLIENT: BRINKER RESTAURANT CORP.
A VIRGINIA CORPORATION

DATE	DESCRIPTION
6/27/2024	ISSUE FOR PERMIT
9/23/2024	ISSUE FOR BID

1	DATE	DESCRIPTION
1	08.07.2024	CITY COMMENTS

PROJECT NUMBER:
CHI24007

SHEET TITLE:
INTERIOR ELEVATIONS

SHEET NUMBER:
A405

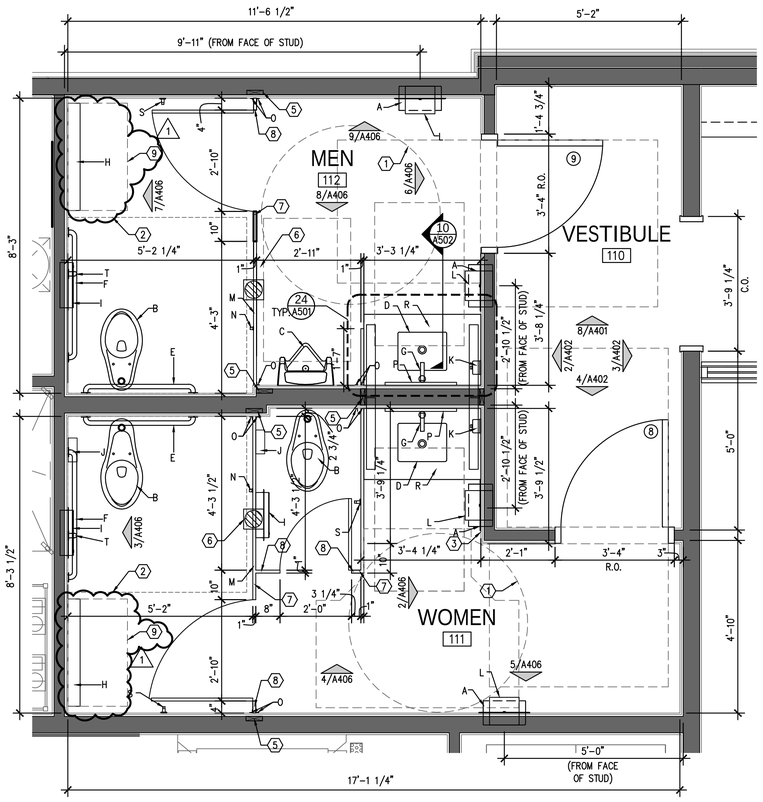

NOTE: SOME DIMENSIONS ARE TO FACE OF FINISH

ENLARGE RESTROOM PLAN 1/2"=1'-0" | 1

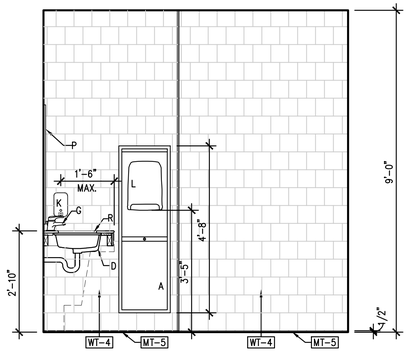

WOMEN 1/2"=1'-0" | 2

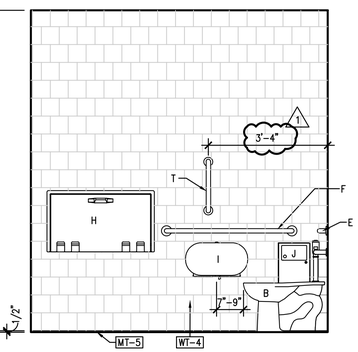

WOMEN 1/2"=1'-0" | 3

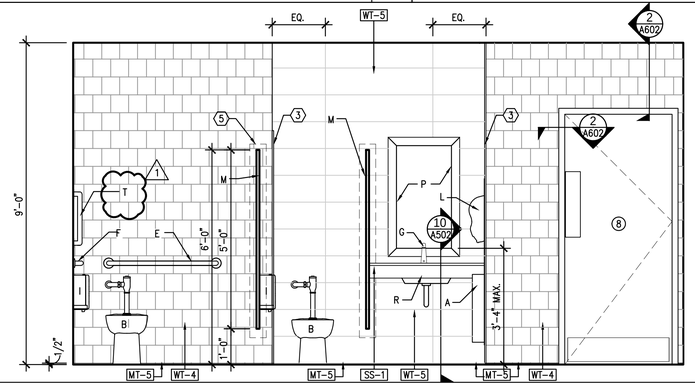

WOMEN 1/2"=1'-0" | 4

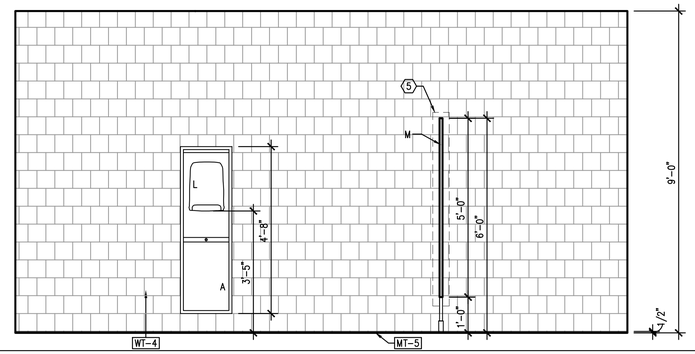

WOMEN 1/2"=1'-0" | 5

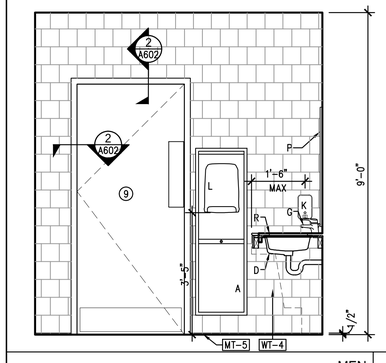

MEN 1/2"=1'-0" | 6

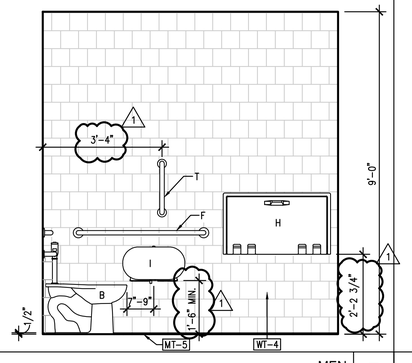

MEN 1/2"=1'-0" | 7

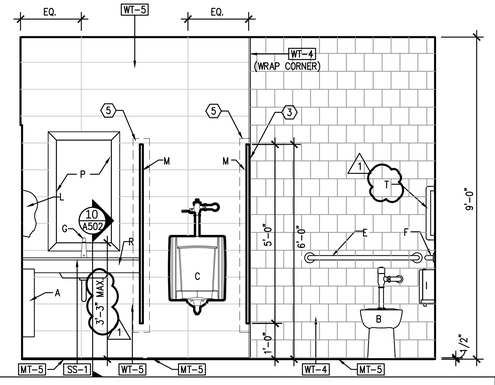

MEN 1/2"=1'-0" | 8

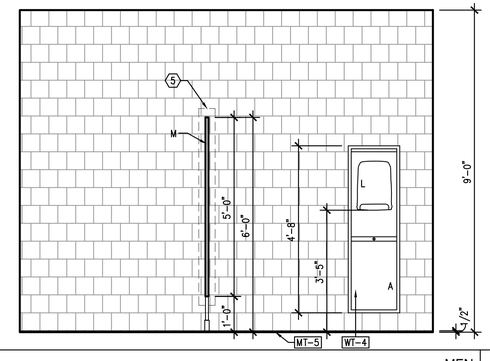

MEN 1/2"=1'-0" | 9

GENERAL NOTES

1	1/4" GAP MAXIMUM GAP AT DOORS TO PARTITION.
2	PROVIDE METAL BACKING FOR ALL ACCESSORIES AND ANCHOR WITH TOGGLE BOLTS OR LAG SCREWS – NO PLASTIC EXPANSION SHIELDS.
3	PROVIDE WALL BUMPER AT TOILET STALL DOORS WHERE THEY CAN CONTACT WALLS.
4	RE: PLUMBING DRAWINGS FOR SPECIFICATIONS OF ALL WATER CLOSETS, LAVATORIES, AND URINALS.
5	ALL EXPOSED PIPING TO BE INSULATED AS PER ADA REQUIREMENTS.
6	ALL ACCESSORIES BASED ON BOBRICK WASHROOM EQUIPMENT UNLESS OTHERWISE NOTED.
7	RESTROOM SIGNAGE, RE: A103
8	MAXIMUM PULL FORCES FOR INTERIOR DOORS: 5.0 LBS.
9	DOOR CLOSERS AND GATE CLOSERS SHALL BE ADJUSTED SO THAT FROM AN OPEN POSITION OF 90 DEGREES, THE TIME REQUIRED TO MOVE THE DOOR TO A POSITION OF 12 DEGREES FROM THE LATCH IS 5 SECONDS MINIMUM.
10	WATER CLOSET DOOR TO BE SELF CLOSING W/ PULL HANDLE ON EACH SIDE OF DOOR NEXT TO LATCH PER SEC. 604.9.3 ICC A117.1–09

KEY NOTES

1	ADA CLEARANCE. SEE ADA STANDARDS.
2	60" x 59" CLEAR FLOOR SPACE PER ADA CLEARANCE
3	BULL NOSE TILE @ CORNER
4	BULLNOSE TILE TRIM TO MATCH WT–4
5	2x6 WOOD BLOCKING IN WALL
6	FLOOR DRAIN, RE: PLUMBING
7	PARTITION POST FLOOR TO CEILING. GC TO PROVIDE BLOCKING AT CEILING.
8	PARTITION POST FLOOR TO 6'–0" A.F.F.
9	36" x 20" DIAPER CHANGING STATION CLEAR FLOOR SPACE.

TOILET ACCESSORY SCHEDULE

TAG	DESCRIPTION	REMARKS
A	RECESSED OPEN CABINET AND WASTE RECEPTACLE	ASI, MODEL: 0469–ND
B	WATER CLOSET	REF PLUMBING
C	URINAL	REF PLUMBING
D	HANDICAP ACCESSIBLE LAVATORY	REF PLUMBING
E	GRAB BAR (36")	BOBRICK B–6806 (HORIZONTAL)
F	GRAB BAR (42")	BOBRICK B–6806 (HORIZONTAL)
G	FAUCET	REF PLUMBING
H	DIAPER CHANGING STATION	FURNISHED BY OWNER AND INSTALLED BY CONTRACTOR
I	TOILET TISSUE DISPENSER	FURNISHED BY OWNER AND INSTALLED BY CONTRACTOR
J	SANITARY NAPKIN DISPOSAL	FURNISHED BY OWNER AND INSTALLED BY CONTRACTOR
K	SOAP DISPENSER	F1301BC, PROVIDED BY OWNER INSTALLED BY CONTRACTOR
L	PAPER TOWEL DISPENSER	SAN JAMAR T8400TBK, PROVIDED BY OWNER, INSTALLED BY CONTRACTOR
M	TOILET PARTITIONS	DIAMOND TEXTURED RE: SPEC SECTION 102113
N	COAT HOOK	BOBRICK B–233
O	CONTINUOUS 'L' ANGLE	FULL HEIGHT OF PARTITION
P	24" x 40" MIRROR	FURNISHED BY OWNER AND INSTALLED BY CONTRACTOR, REF. SHEET I102
R	COUNTERTOP	RE: DETAIL 10/A502, FURNISHED AND INSTALLED BY CONTRACTOR
S	DOOR BUMPER	BOBRICK B–687
T	GRAB BAR (18")	BOBRICK B–6806 (VERTICAL)

FINISH SCHEDULE

INTERIOR PAINT	
P–7	CHATROOM
WALL TILE	
WT–4	ARCHITECTURAL GRAY
WT–5	ANTHRACITE
SOLID SURFACE	
SS–1	SHARPHAM – WATERSTONE COLLECTION
METAL FINISHES	
MT–5	DILEX–AHKA 80 AE SCHLUTER
GROUT	

TYPE	COLOR NAME	REMARKS
G–4	WINTER GRAY, #335	MAPEI, FLOOR AND WALL TILE

NOTES: SELECT PRODUCT THAT IS APPROPRIATE FOR EACH APPLICATION (IE: EPOXY, CEMENT, ETC.). CONSULT TILE MANUFACTURERS FOR RECOMMENDED GROUT FORMULA

HANDICAP ACCESSIBLE TOLERANCES

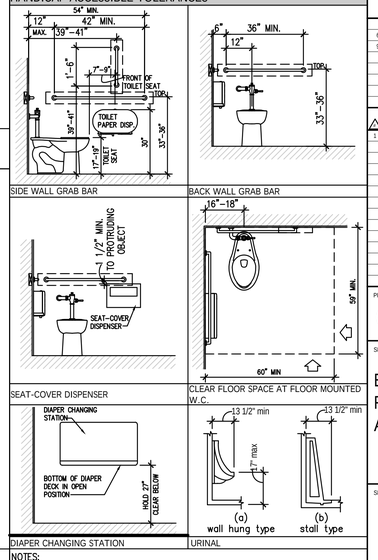

NOTES:
1. DIMENSIONS SHOWN HERE ARE FROM FACE OF WALL OR FLOOR FINISH.
2. DIMENSIONS SHOWN ON RESTROOM INTERIOR ELEVATIONS TAKE PRIORITY.

ARCHITECT:

DAVID SCOTT WINDLE, AIA

6201 CAMPUS CIRCLE DRIVE E.
IRVING, TEXAS 75038
TEL: 972.870.1288
WWW.IDSTUDIO4.COM
E-MAIL scottw@idstudio4.com

CORPORATE:
BRINKER RESTAURANT CORPORATION,
A VIRGINIA CORPORATION
3000 OLYMPUS BLVD.
DALLAS, TEXAS 75019
972.980.9917
www.brinker.com

09/23/2024
ISSUE FOR BID
THESE DOCUMENTS ARE FOR BIDDING PURPOSES ONLY. DO NOT USE FOR CONSTRUCTION.

RESTAURANT #CH1679
PROTOTYPE 18.5FS

CHILI'S TOOELE
951 N MAIN STREET
TOOELE, UT 84074

CLIENT: BRINKER RESTAURANT CORP.
A VIRGINIA CORPORATION

DATE	DESCRIPTION
6/27/2024	ISSUE FOR PERMIT
9/23/2024	ISSUE FOR BID

	DATE	DESCRIPTION
1	08.07.2024	CITY COMMENTS

PROJECT NUMBER:
CHI24007

SHEET TITLE:
ENLARGED RESTROOM PLAN AND ELEVATIONS

SHEET NUMBER:
A406

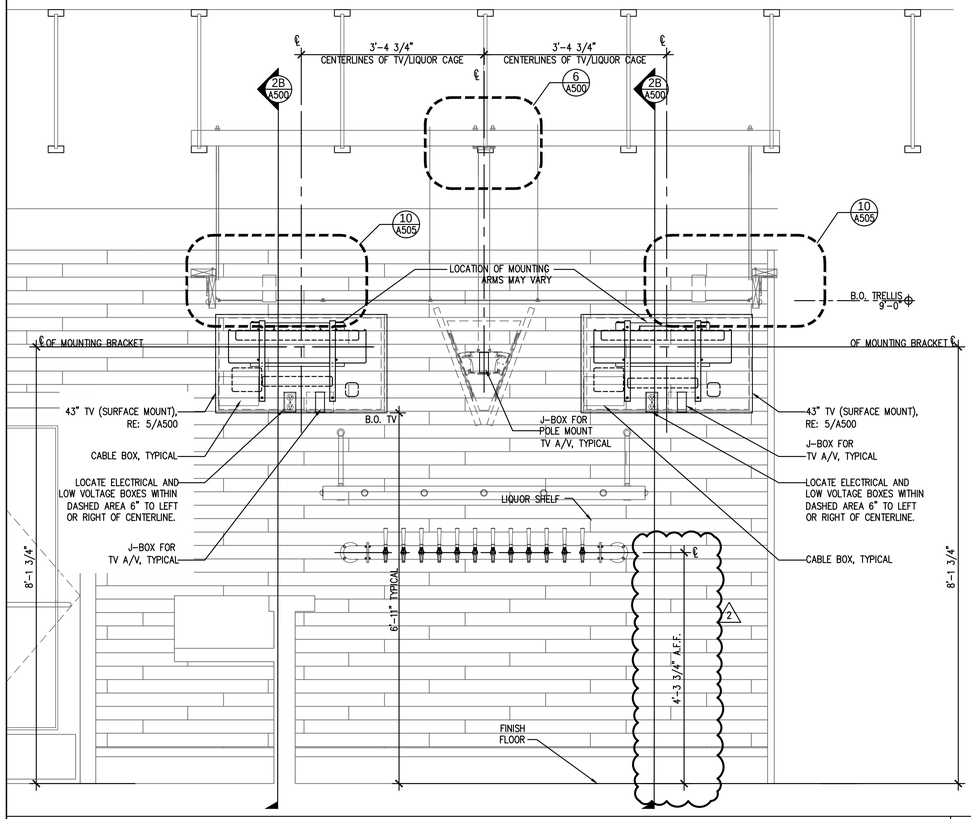

TV'S AT BACK BAR 1
3/4"=1'-0"

NOT USED 2A
1"=1'-0"

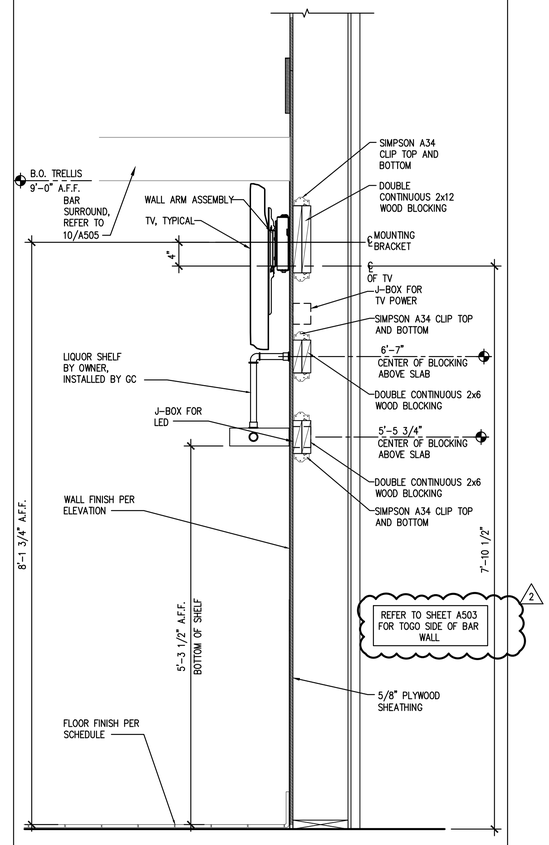

TV AT BACKWALL SECTION 2B
1"=1'-0"

NOT USED 3

GENERAL NOTES

1	FIELD VERIFY SIZE OF TV(2) TO PROPERLY COORDINATE TV LAYOUT. CUT SHEETS TO BE PROVIDED BY PURCHASING.
2	G.C. TO INSTALL DUPLEX OUTLETS AND RG-6 CABLE FOR TV'S, HOME RUN RG-6 CABLE FROM DIRECT TV 16 SWITCH TO ALL TV'S. G.C. TO PROVIDE 3'-0" TAG IN AT WALL MOUNTS, 8'-0" TAG IN AT CEILING MOUNT AND 8'-0" AT OTHER END WHERE THE SWITCH IS GOING TO BE LOCATED.
3	OUTLETS AT ALL TV'S ARE TO BE RECESSED "CLOCK" TYPE.
4	G.C. TO INSTALL OUTLET FOR LIQUOR CAGE.
5	G.C. TO INSTALL (1) DUPLEX AND (1) J-BOX AT 55" TV FOR SOUND ON BACK BAR AS SHOWN.
6	G.C. TO PROVIDE 22 GAUGE COPPER ELECTRICAL WIRE FOR TV/MUSIC SOUND CONNECTION.

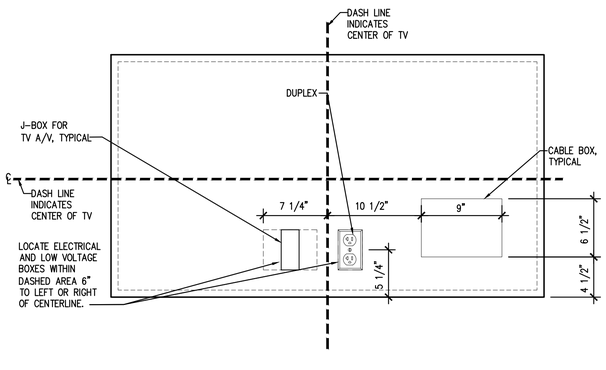

55" TV CABLE/ELECTRICAL BOX LOCATIONS 4
1 1/2"=1'-0"

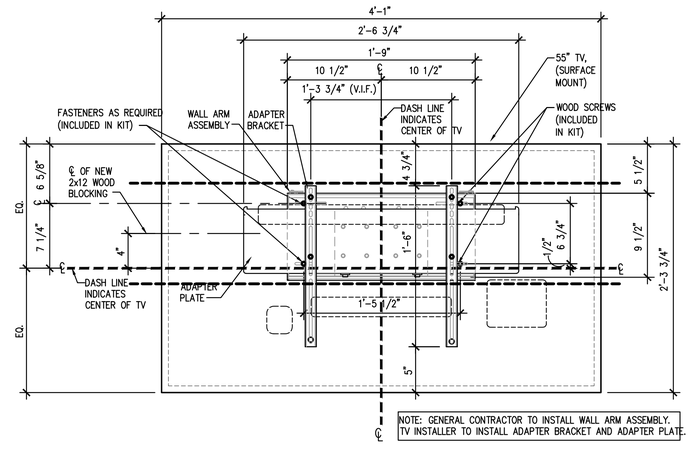

55" TV WITH PEERLESS ARTICULATE MOUNT 5
1 1/2"=1'-0"

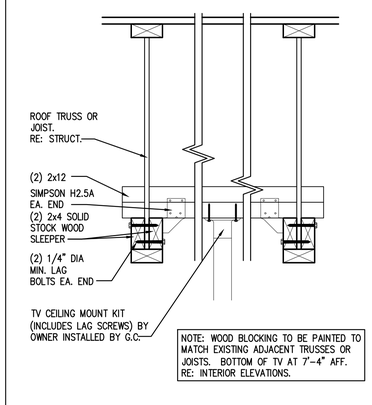

TYPICAL MOUNT DETAIL 6
1 1/2"=1'-0"

ARCHITECT:

DAVID SCOTT WINDLE, AIA

6201 CAMPUS CIRCLE DRIVE E.
IRVING, TEXAS 75038
TEL: 972.870.1288
WWW.IDSTUDIO4.COM
E-MAIL scottw@idstudio4.com

CORPORATE:
BRINKER RESTAURANT CORPORATION, A VIRGINIA CORPORATION
3000 OLYMPUS BLVD.
DALLAS, TEXAS 75019
972.980.9917
www.brinker.com

09/23/2024
ISSUE FOR BID
THESE DOCUMENTS ARE FOR BIDDING PURPOSES ONLY. DO NOT USE FOR CONSTRUCTION.

RESTAURANT #CH1679
PROTOTYPE 18.5FCS

CHILI'S TOOELE
951 N MAIN STREET
TOOELE, UT 84074

CLIENT: BRINKER RESTAURANT CORP. A VIRGINIA CORPORATION

DATE	DESCRIPTION
6/27/2024	ISSUE FOR PERMIT
9/23/2024	ISSUE FOR BID

	DATE	DESCRIPTION
3	08.23.2024	OWNER COMMENTS

PROJECT NUMBER:
CHI24007

SHEET TITLE:
TV & BAR DIE WALL DETAILS

SHEET NUMBER:
A500

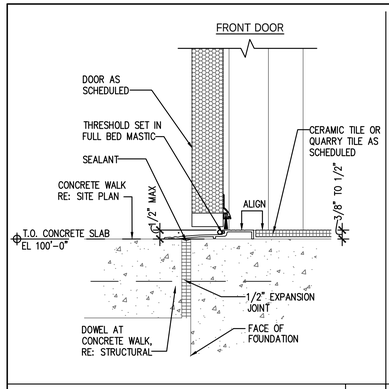

DOOR SILL 3=1'-0" | 1

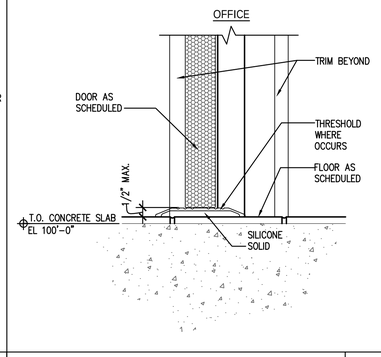

DOOR SILL 3=1'-0" | 2

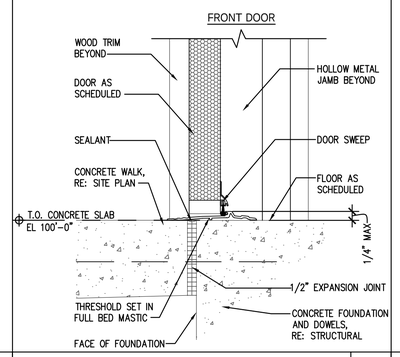

DOOR SILL 3=1'-0" | 3

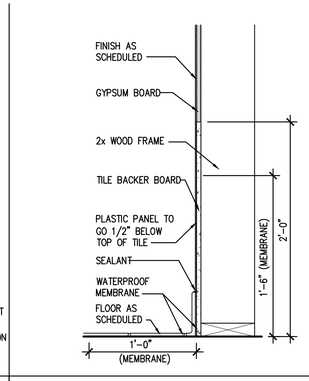

WATERPROOF MEMBRANE 1 1/2"=1'-0" | 4

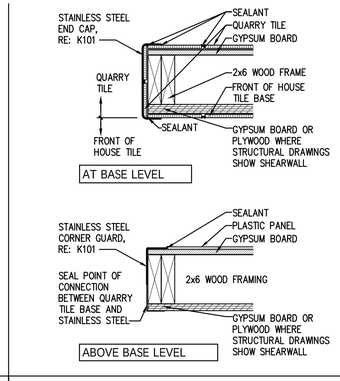

BASE AT KITCHEN WALL 1 1/2"=1'-0" | 5

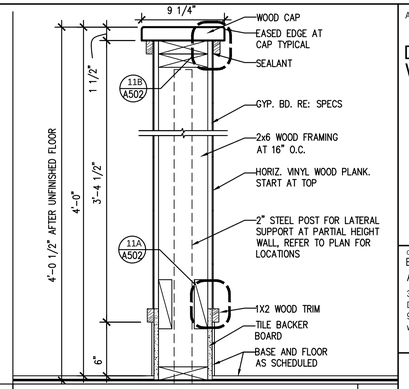

LOW WALL SECTION 1 1/2"=1'-0" | 6

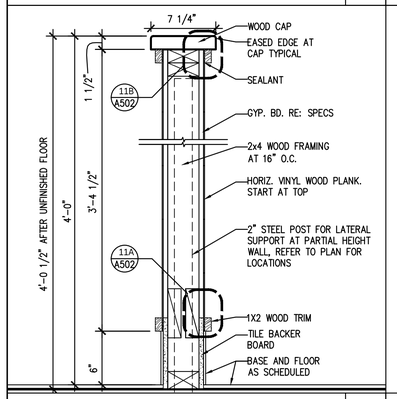

LOW WALL SECTION 1 1/2"=1'-0" | 7

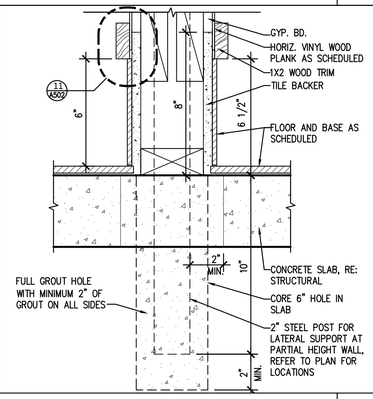

LOW WALL SLAB CONNECTION DETAIL 3=1'-0" | 8

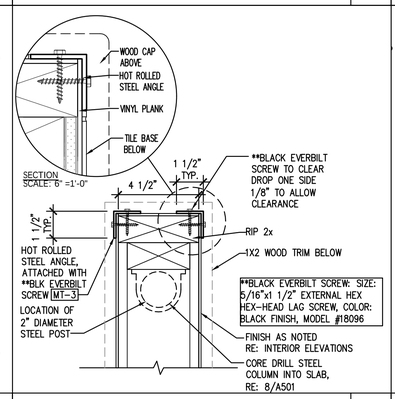

LOW WALL END CONDITION PLAN 3=1'-0" | 9

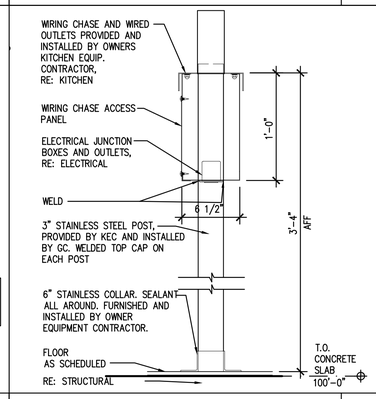

PASS THROUGH POST DETAIL 1 1/2"=1'-0" | 10

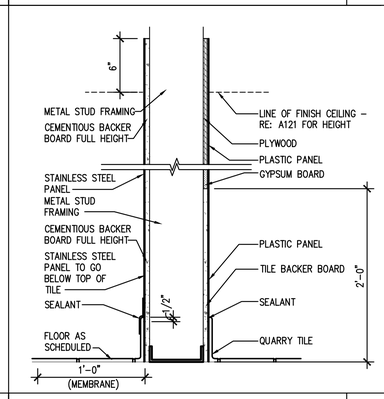

WALL SECTION AT KITCHEN 1 1/2"=1'-0" | 11

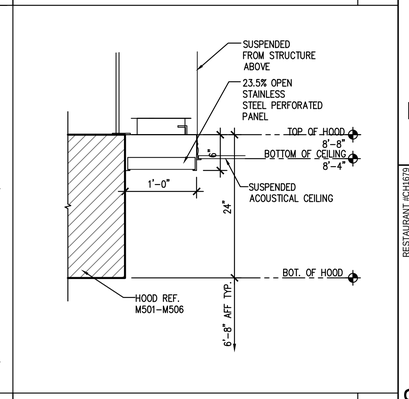

HOOD SECTION 1 1/2"=1'-0" | 12

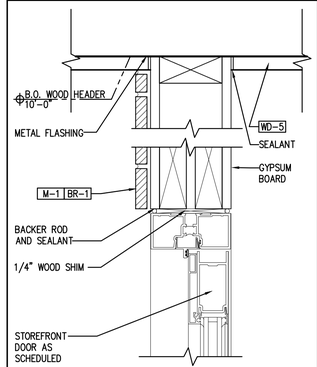

STOREFRONT SECTION AT VESTIBULE 3=1'-0" | 13

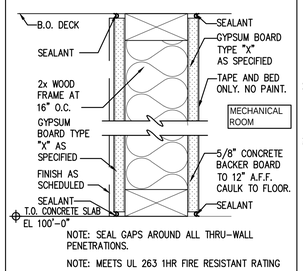

UTILITY ROOM PARTITION 3=1'-0" | 14

NOTE: GC TO VERIFY FINISHES IN ALL AREAS

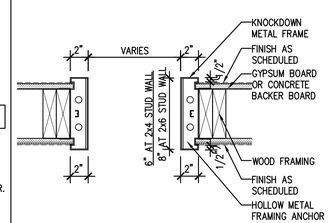

JAMB AT CASED OPENING 1 1/2"=1'-0" | 15

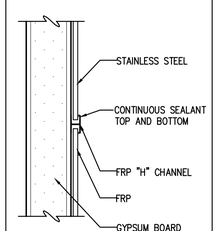

DETAIL AT FRP SS. CONNECTION 6" = 1'-0" | 16

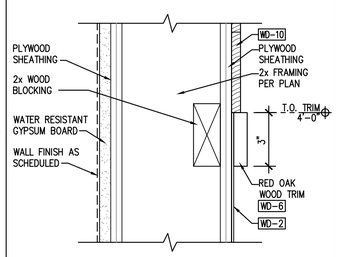

DETAIL 3"=1'-0" | 17

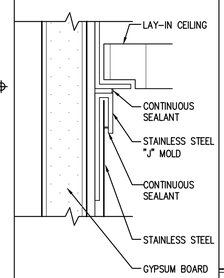

DETAIL AT SS TO CLG. CONNECTION 6" = 1'-0" | 18

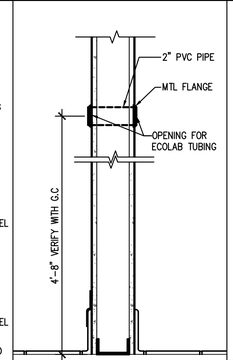

ECOLAB TUBING 1 1/2"=1'-0" | 19

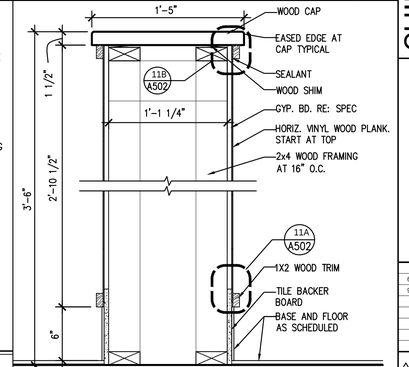

LOW WALL SECTION 1 1/2"=1'-0" | 20

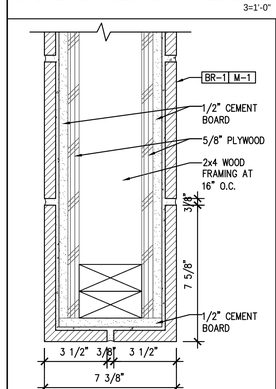

WALL PLAN 3"=1'-0" | 21

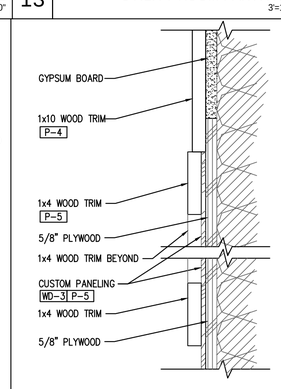

DETAIL 3" = 1'-0" | 22

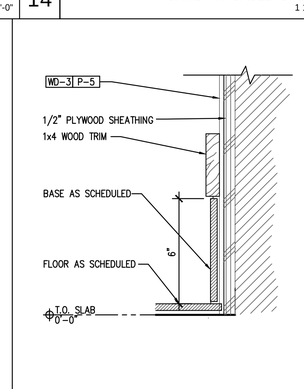

DETAIL 3" = 1'-0" | 23

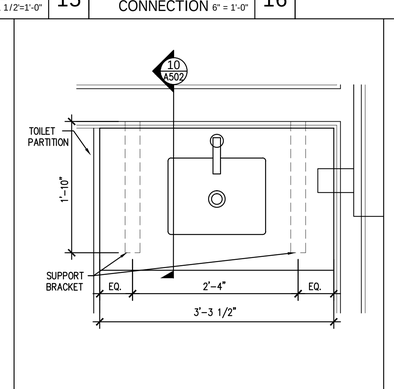

RESTROOM COUNTER TOP 1"=1'-0" | 24

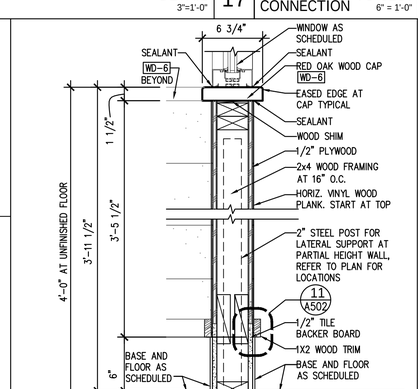

LOW WALL SECTION 1 1/2"=1'-0" | 25

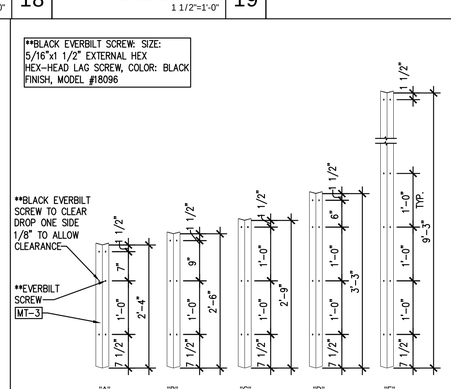

CORNER GUARD ELEVATIONS 3/4"=1'-0" | 26

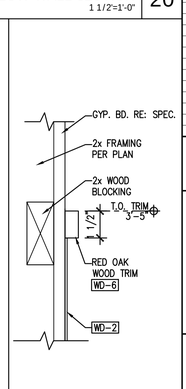

DETAIL 3"=1'-0" | 27

ARCHITECT:

DAVID SCOTT WINDLE, AIA

6201 CAMPUS CIRCLE DRIVE E.
IRVING, TEXAS 75038
TEL: 972.870.1288
WWW.IDSTUDIO4.COM
E-MAIL scottw@idstudio4.com

CORPORATE:
BRINKER RESTAURANT CORPORATION, A VIRGINIA CORPORATION
3000 OLYMPUS BLVD.
DALLAS, TEXAS 75019
972.980.9917
www.brinker.com

09/23/2024
ISSUE FOR BID
THESE DOCUMENTS ARE FOR BIDDING PURPOSES ONLY. DO NOT USE FOR CONSTRUCTION.

RESTAURANT #CH1679
PROTOTYPE 18.5FS

CHILI'S TOOELE
951 N MAIN STREET
TOOELE, UT 84074

CLIENT: BRINKER RESTAURANT CORP. A VIRGINIA CORPORATION

DATE	DESCRIPTION
6/27/2024	ISSUE FOR PERMIT
9/23/2024	ISSUE FOR BID

DATE	DESCRIPTION

PROJECT NUMBER:
CHI24007

SHEET TITLE:
INTERIOR DETAILS

SHEET NUMBER:
A501

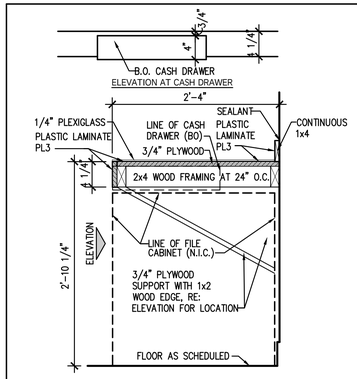

OFFICE COUNTER 1 — 1"=1'-0"

NOT USED 2

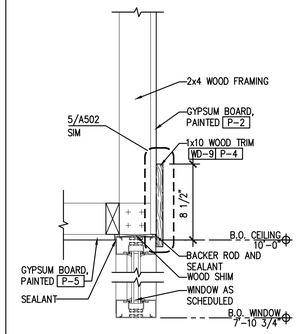

SECTION 3 — 1 1/2"=1'-0"

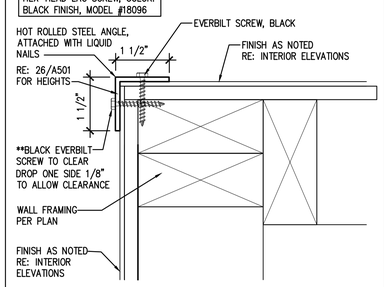

CORNER DETAIL 4 — 6"=1'-0"

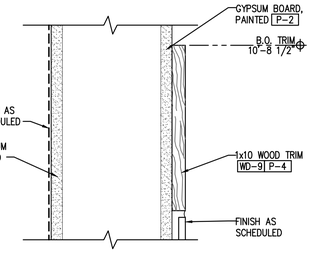

SOFFIT SECTION 5 — 1 1/2"= 1'-0"

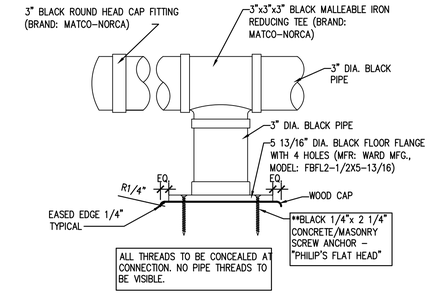

DETAIL 6 — 3"=1'-0"

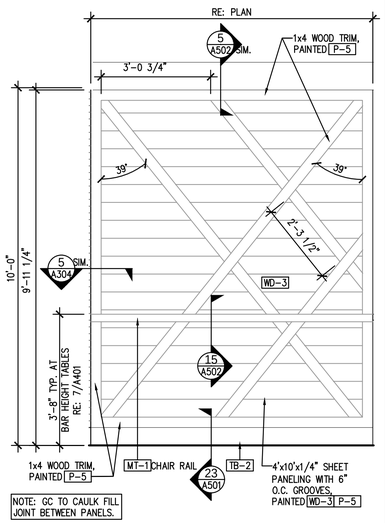

PANELING ELEVATION 7 — 1/2"=1'-0"

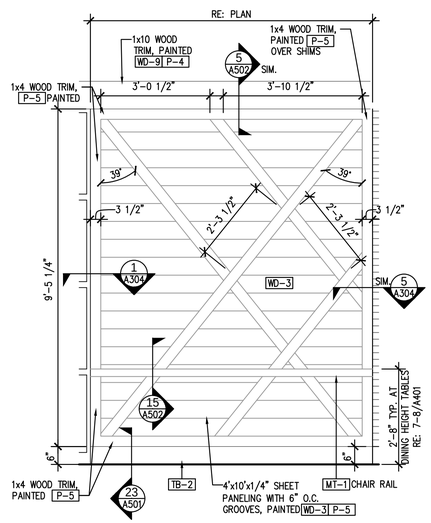

PANELING ELEVATION 8 — 1/2"=1'-0"

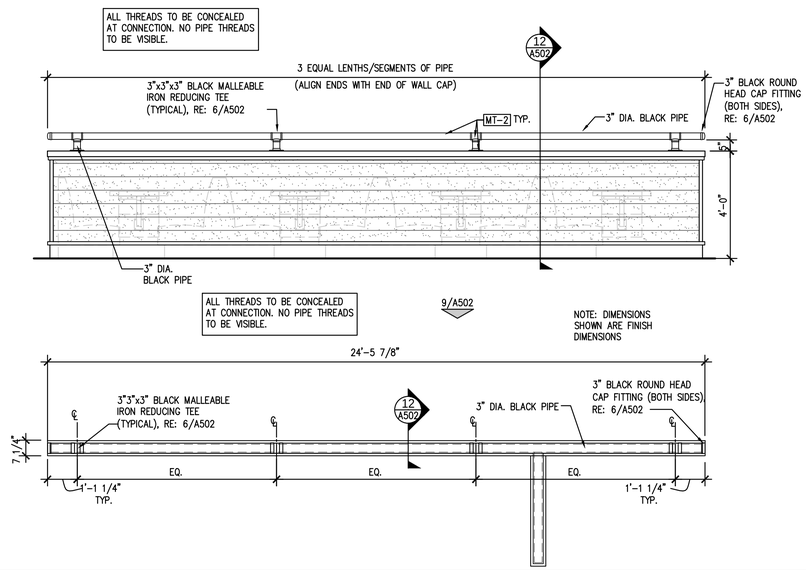

LOW WALL PLAN 9 — 3/8"=1'-0"

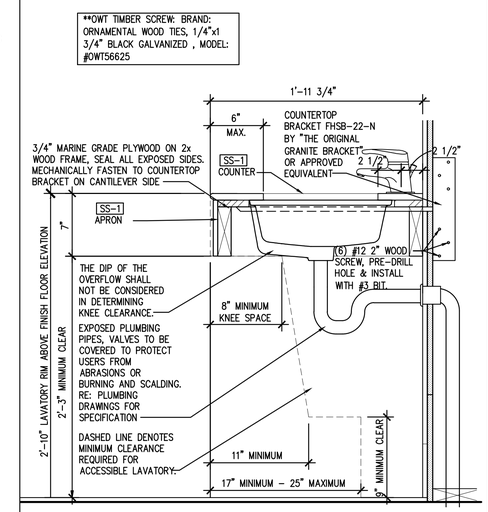

RESTROOM LAVATORY DETAIL 10 — 1 1/2"=1'-0"

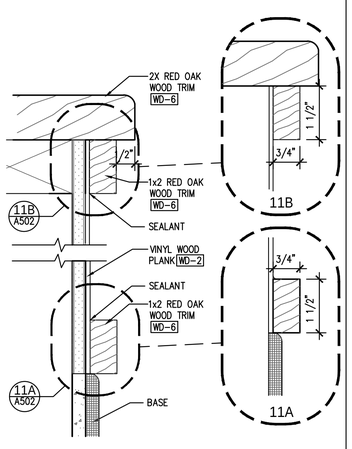

TRIM DETAIL 11 — 6"=1'-0"

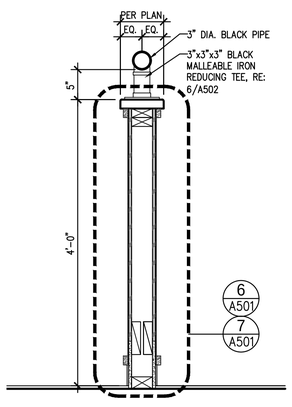

LOW WALL DETAIL 12 — 1"=1'-0"

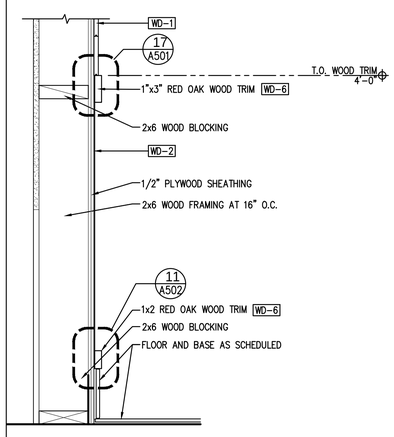

WALL TRIM AT RAISED BOOTHS 13 — 1 1/2"=1'-0"

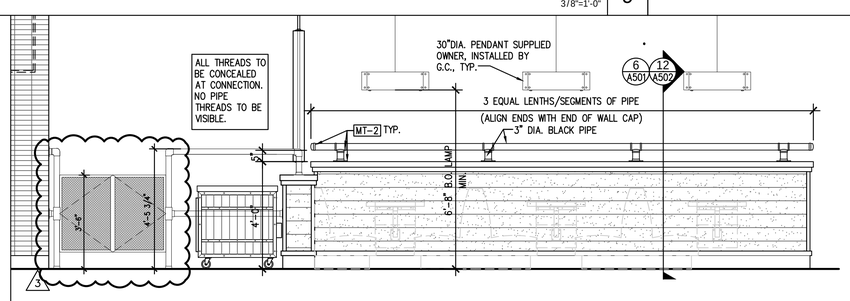

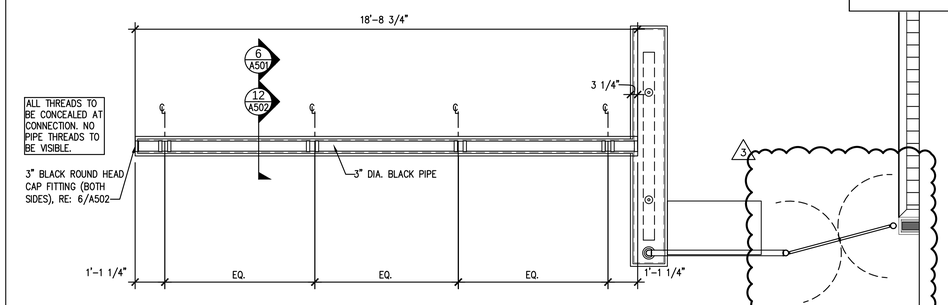

LOW WALL REFLECTED CEILING PLAN 14 — 3/8"=1'-0"

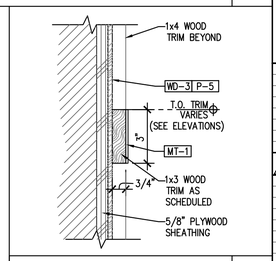

DETAIL 15 — 3" = 1'-0"

NOT USED 16 — 1" = 1'-0"

ARCHITECT:

DAVID SCOTT WINDLE, AIA

6201 CAMPUS CIRCLE DRIVE E.
IRVING, TEXAS 75038
TEL: 972.870.1288
WWW.IDSTUDIO4.COM
E-MAIL scottw@idstudio4.com

CORPORATE:
BRINKER RESTAURANT CORPORATION, A VIRGINIA CORPORATION
3000 OLYMPUS BLVD.
DALLAS, TEXAS 75019
972.980.9917
www.brinker.com

09/23/2024
ISSUE FOR BID
THESE DOCUMENTS ARE FOR BIDDING PURPOSES ONLY. DO NOT USE FOR CONSTRUCTION.

RESTAURANT #CH1679
PROTOTYPE 18.5FS

CHILI'S TOOELE
951 N MAIN STREET
TOOELE, UT 84074

CLIENT: BRINKER RESTAURANT CORP. A VIRGINIA CORPORATION

DATE	DESCRIPTION
6/27/2024	ISSUE FOR PERMIT
9/23/2024	ISSUE FOR BID

	DATE	DESCRIPTION
3	09.10.2024	CITY COMMENTS

PROJECT NUMBER:
CHI24007

SHEET TITLE:
INTERIOR DETAILS

SHEET NUMBER:
A502

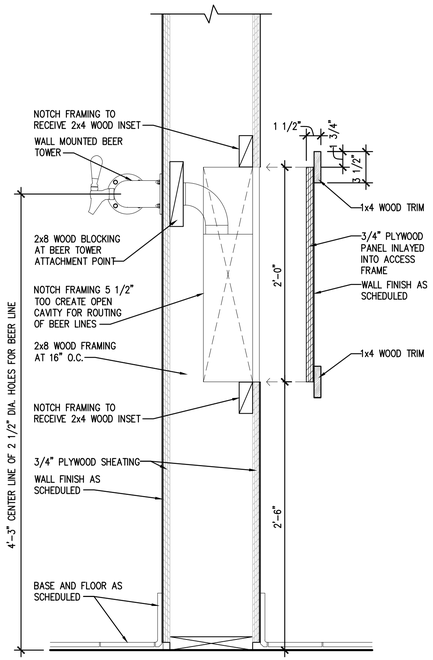

BACK BAR WALL SECTION 1

1 1/2"=1'-0"

1

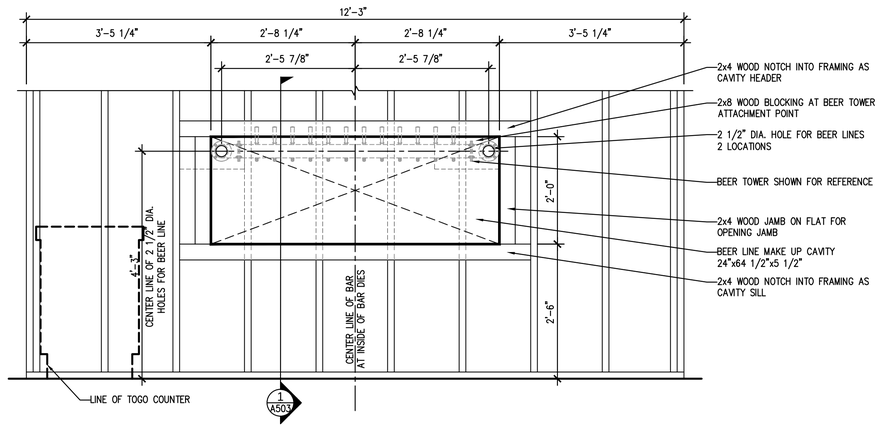

FRAMING ELEVATION (TOGO SIDE OF BACK BAR WALL)

3/4"=1'-0"

2

ARCHITECT:

DAVID SCOTT WINDLE, AIA

6201 CAMPUS CIRCLE DRIVE E.
IRVING, TEXAS 75038
TEL: 972.870.1288
WWW.IDSTUDIO4.COM
E-MAIL scottw@idstudio4.com

CORPORATE:
BRINKER RESTAURANT CORPORATION, A VIRGINIA CORPORATION
3000 OLYMPUS BLVD.
DALLAS, TEXAS 75019
972.980.9917
www.brinker.com

09/23/2024

ISSUE FOR BID

THESE DOCUMENTS ARE FOR BIDDING PURPOSES ONLY. DO NOT USE FOR CONSTRUCTION.

RESTAURANT #CH1679
PROTOTYPE 18.5FS

CHILI'S TOOELE

951 N MAIN STREET
TOOELE, UT 84074

CLIENT: BRINKER RESTAURANT CORP. A VIRGINIA CORPORATION

DATE	DESCRIPTION
6/27/2024	ISSUE FOR PERMIT
9/23/2024	ISSUE FOR BID

△	DATE	DESCRIPTION

PROJECT NUMBER:

CHI24007

SHEET TITLE:

INTERIOR DETAILS

SHEET NUMBER:

A503

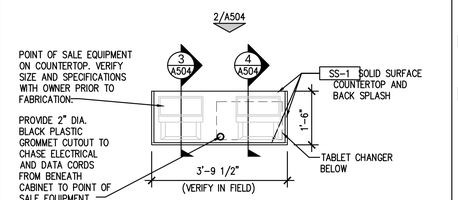

MW01 POS CABINET - PLAN 1
1/2"=1'-0"

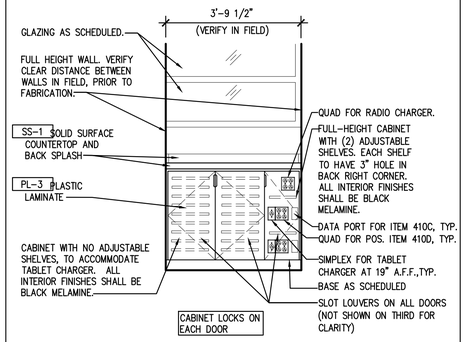

MW01 POS CABINET - ELEVATION 2
1/2"=1'-0"

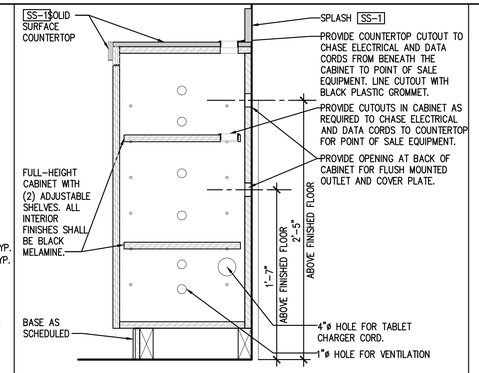

MW01 POS CABINET - SECTION 3
1 1/2"=1'-0"

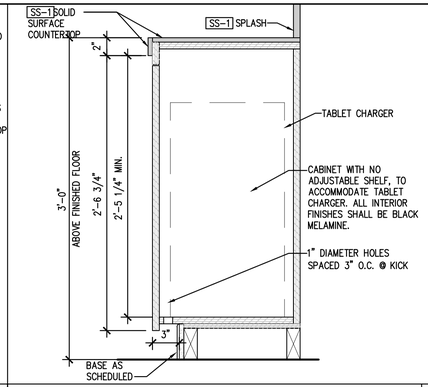

POS CABINET - SECTION 4
1 1/2"=1'-0"

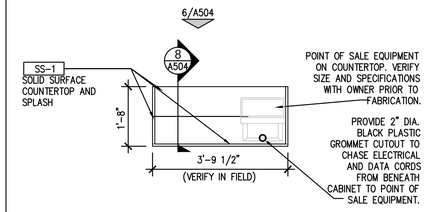

MW02 POS CABINET - PLAN 5
1/2"=1'-0"

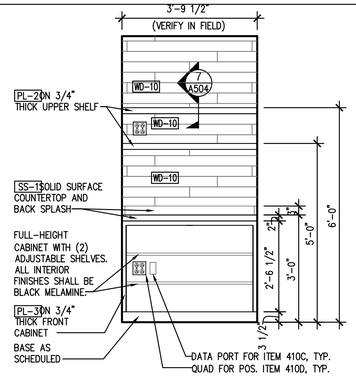

MW02 POS CABINET - ELEVATION 6
1/2"=1'-0"

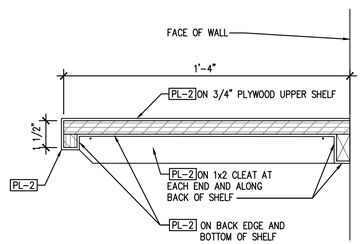

MW02 POS CABINET - SECTION 7
3"=1'-0"

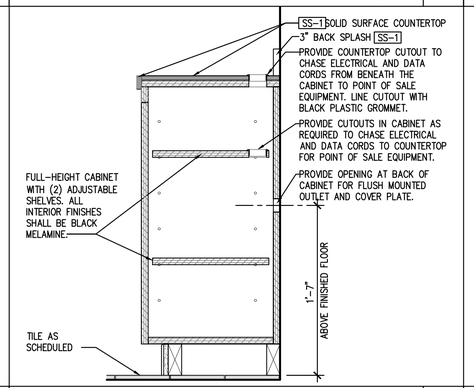

MW02 POS CABINET - SECTION 8
1 1/2"=1'-0"

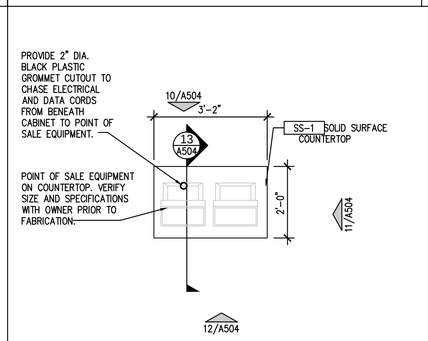

TG01 TO GO FRONT COUNTER - PLAN 9
1/2"=1'-0"

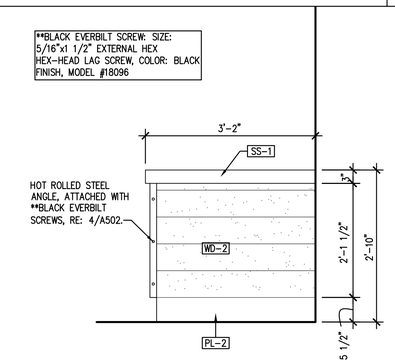

TG01 TO GO FRONT COUNTER - ELEVATION 10
3/4"=1'-0"

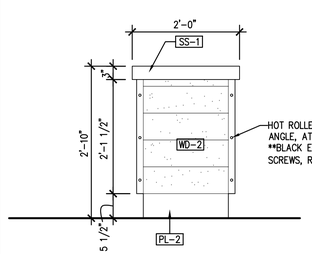

TG01 TO GO FRONT COUNTER - ELEVATION 11
3/4"=1'-0"

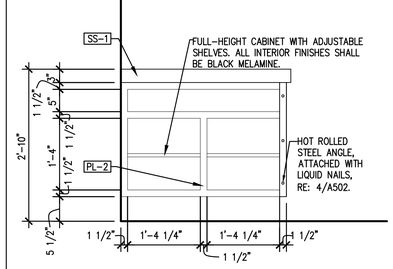

TG01 TO GO FRONT COUNTER - ELEVATION 12
1 1/2"=1'-0"

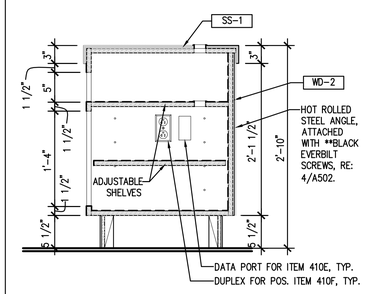

TG01 TO GO CABINET - SECTION 13
1"=1'-0"

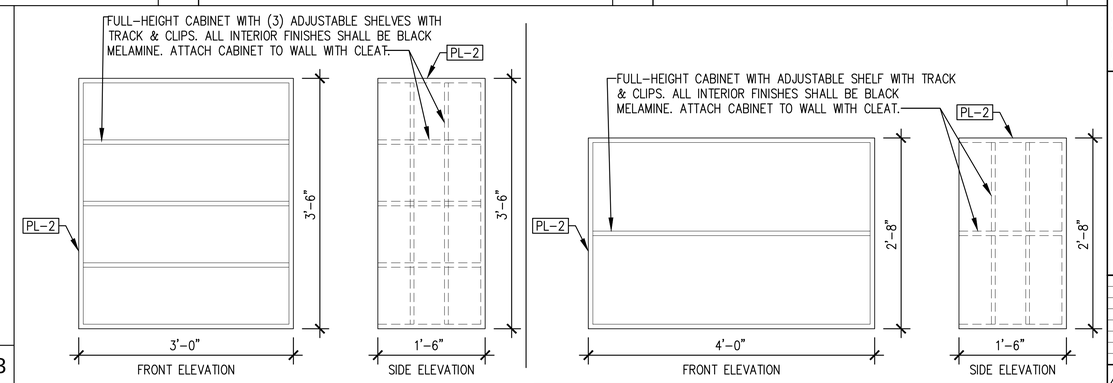

OFFICE CABINETS 14
1"=1'-0"

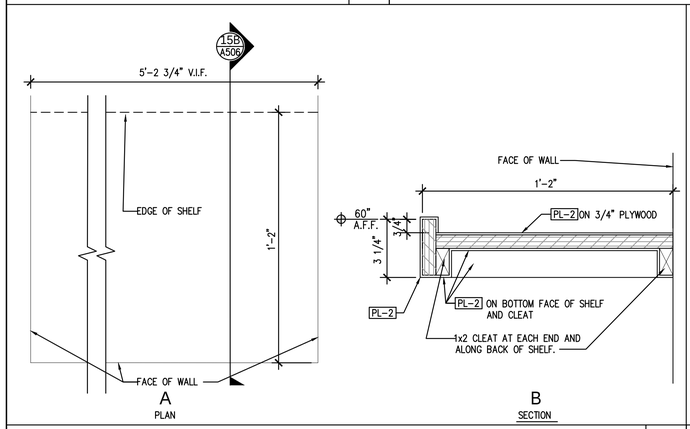

BOOSTER SHELF DETAIL 15
3"=1'-0"

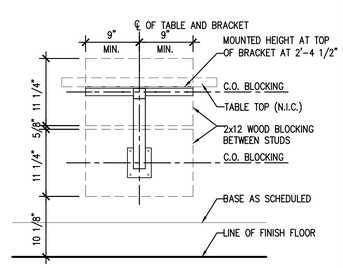

TABLE SUPPORT 16
1"=1'-0"

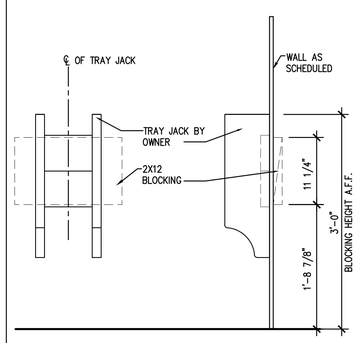

TRAY JACK 17
1"=1'-0"

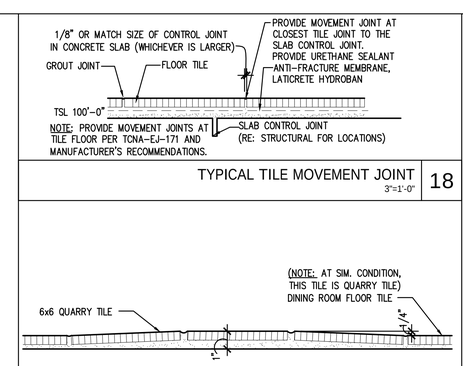

TYPICAL TILE MOVEMENT JOINT 18
3"=1'-0"

FLOOR TRANSITION (TO-GO TO BACK OF BAR) 19
3"=1'-0"

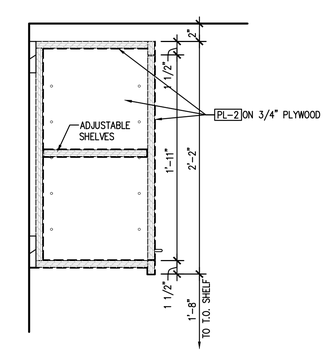

CABINET SECTION 20
1 1/2"=1'-0"

ARCHITECT:

DAVID SCOTT WINDLE, AIA

6201 CAMPUS CIRCLE DRIVE E.
IRVING, TEXAS 75038
TEL: 972.870.1288
WWW.IDSTUDIO4.COM
E-MAIL scottw@idstudio4.com

CORPORATE:
BRINKER RESTAURANT CORPORATION, A VIRGINIA CORPORATION
3000 OLYMPUS BLVD.
DALLAS, TEXAS 75019
972.980.9917
www.brinker.com

09/23/2024
ISSUE FOR BID
THESE DOCUMENTS ARE FOR BIDDING PURPOSES ONLY. DO NOT USE FOR CONSTRUCTION.

RESTAURANT #CH1679
PROTOTYPE 18.5FS

CHILI'S TOOELE
951 N MAIN STREET
TOOELE, UT 84074

CLIENT: BRINKER RESTAURANT CORP., A VIRGINIA CORPORATION

DATE	DESCRIPTION
6/27/2024	ISSUE FOR PERMIT
9/23/2024	ISSUE FOR BID

DATE	DESCRIPTION

PROJECT NUMBER:
CHI24007

SHEET TITLE:
MILLWORK DETAILS

SHEET NUMBER:
A504

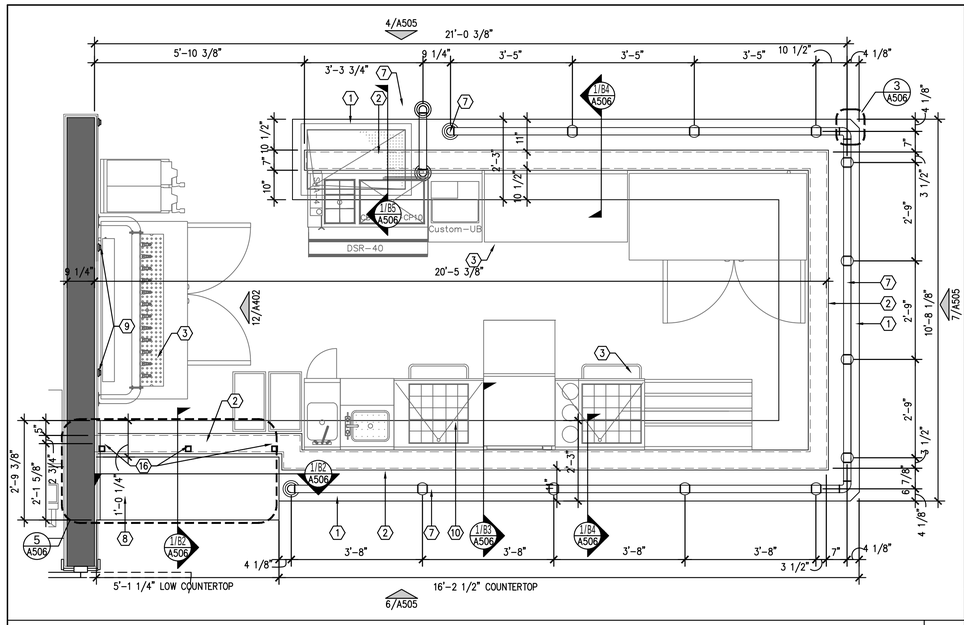

BAR COUNTER PLAN 1/2"=1'-0" 1

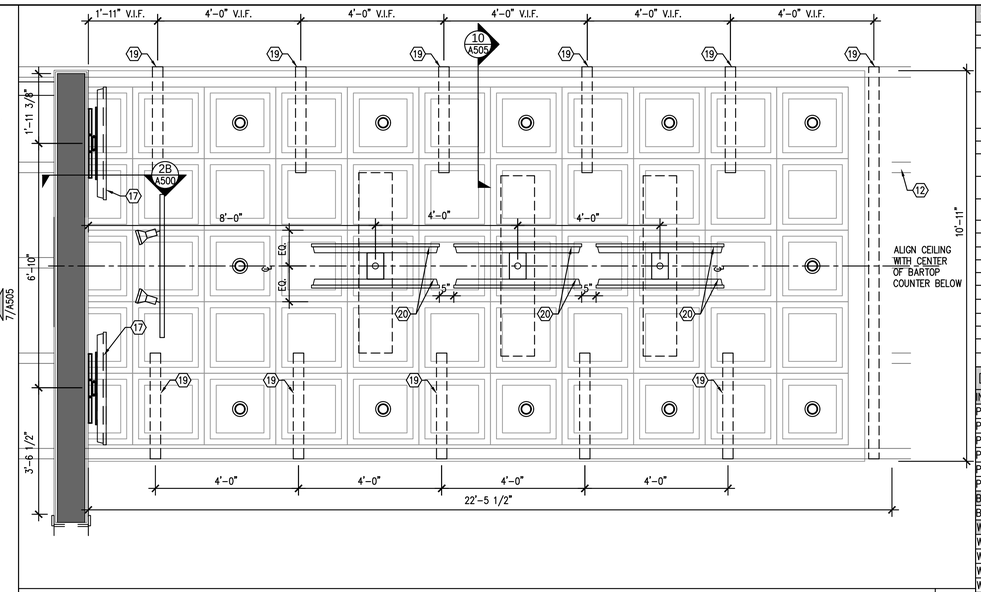

BAR CEILING 1/2"=1'-0" 2

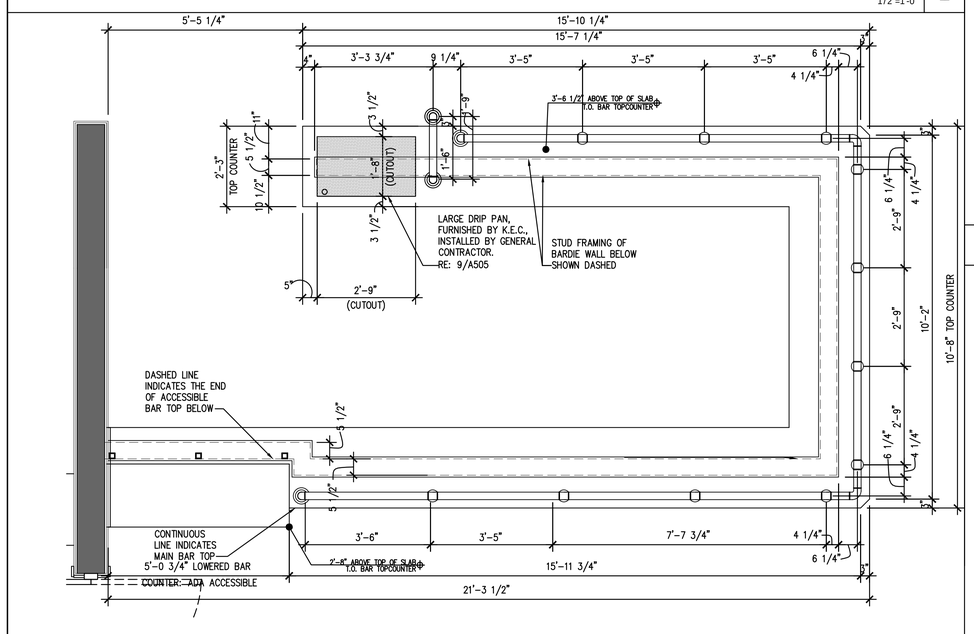

BARTOP PLAN WITH DRAIN PAN, MARGARITA AND BEER PULL OPENINGS AT MW-10 BAR COUNTER 1/2"=1'-0" 3

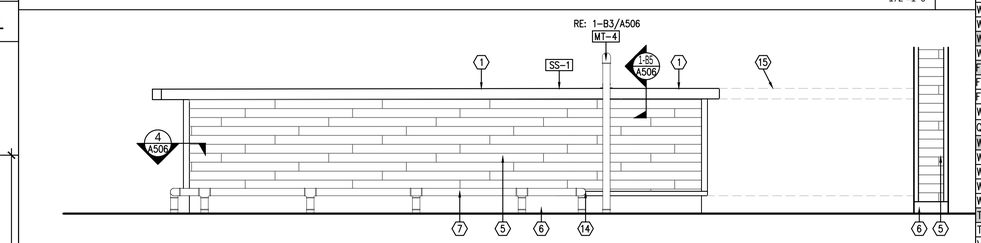

BAR ELEVATION 1/2"=1'-0" 4

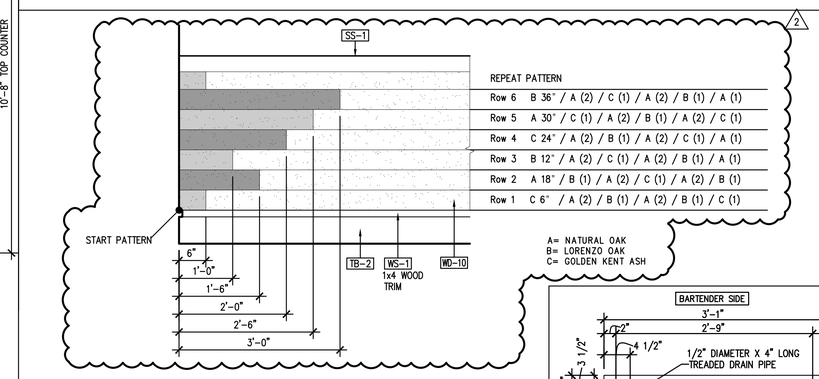

BAR ELEVATION 3/4"=1'-0" 5

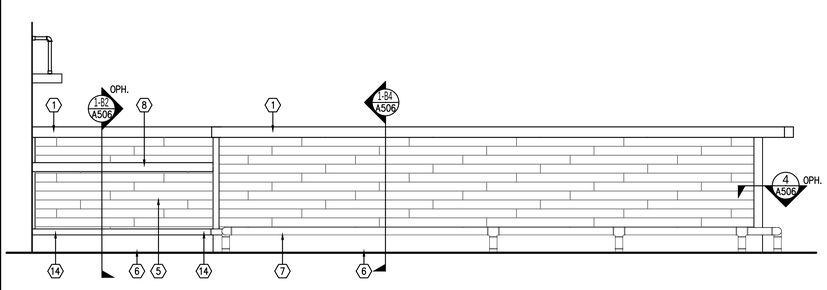

BAR ELEVATION 1/2"=1'-0" 6

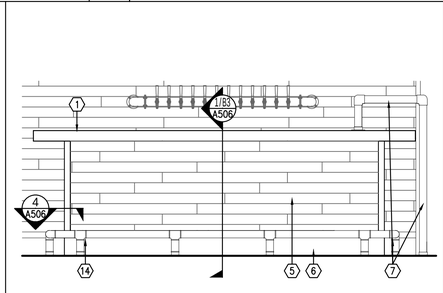

BAR ELEVATION 1/2"=1'-0" 7

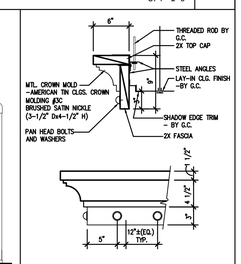

CROWN MOLDING 1" = 1'-0" 8

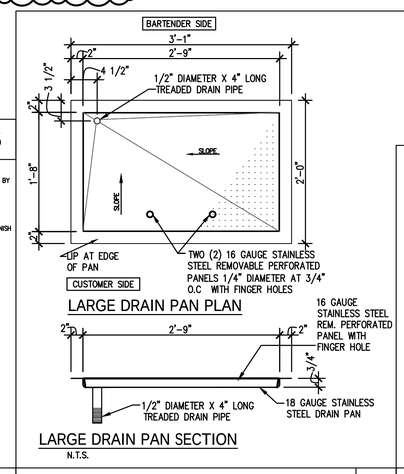

LARGE DRAIN PAN PLAN

LARGE DRAIN PAN SECTION N.T.S.

LARGE DRAIN PAN DETAIL 1" = 1'-0" 9

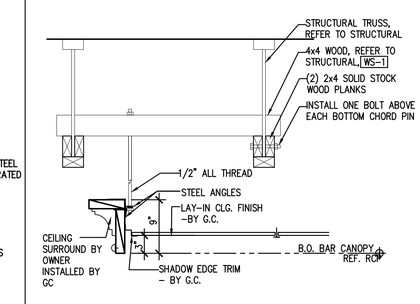

SECTION DETAIL 1"=1'-0" 10

KEYED NOTES	
1	SS-1 SOLID SURFACE COUNTER TOP, WITH 3" HIGH DROP EDGE BY GC.
2	LINE OF BAR-DIE WALL.
3	BAR EQUIPMENT BELOW COUNTER. VERIFY SPECIFICATIONS PRIOR TO FABRICATION TO ENSURE SIZING, PLUMBING AND ELECTRICAL REQUIREMENTS, ETC. INSTALL BAR EQUIPMENT TIGHT TO BAR DIE WALL, SEAL WITH SILICONE AT TOP/WALL INTERSECTION.
4	PROVIDE COUNTERTOP CUTOUT TO ACCOMMODATE DRAIN/WATER LINES AT EQUIPMENT. COORDINATE WITH LOCATION OF PLUMBING LINES BELOW. LINE CUTOUT WITH STAINLESS STEEL. RE: B5/A506.
5	WD-10 FINISH AS SCHEDULED
6	TB-2 BASE APPLIED TO CUSTOMER SIDE OF PART-HEIGHT WALLS.
7	2 1/2" DIAMETER THREADED BLACK IRON PIPE FOOTRAIL & FITTINGS. DRILL & EXPANSION BOLT COLLAR TO CONCRETE SLAB.
8	LOWERED PORTION OF BAR COUNTER (2'-8" A.F.F.) IS TO ACCOMMODATE ADA - ACCESSIBLE SEATING.
9	WALL DOOR STOP, ROCKWOOD 409 US26D, WROUGHT CONCAVE BUMPER, SMS & PLASTIC TOGGLE
10	BEER TOWER, RE: KITCHEN DRAWINGS.
11	LIQUOR CAGE BY OWNER INSTALLED BY GC. RE: 2B/A500
12	ROOF TRUSS
13	LIGHT TRACK, RE: ELECTRICAL.
14	1x2 WOOD TRIM, STAINED WS-1
15	VERTICAL DROP OF BAR COUNTER RE: B1 ON 1/A506
16	RE: 5/A506 FOR SUPPORT DETAIL
17	TELEVISION TO BE WALL MOUNTED PER LOCATION, RE: ELECTRICAL AND DATA.
18	LIGHT TRACK, RE: ELECTRICAL.
19	WOOD SUPPORT AND HANGER VERIFY PLACEMENT IN FIELD. RE: 10/A505
20	TELEVISION TO BE POLE MOUNTED PER LOCATION, RE: 6/A500 & ELECTRICAL.

INTERIOR FINISH SCHEDULE

INTERIOR PAINT	
P-1	WARM STONE
P-2	URBANE BRONZE
P-4	TRICORN BLACK
P-5	REQUISITE GREY
P-6	SALUTE RED
P-7	CHATROOM
BRICK	
BR-1	BURGUNDY
WOOD PANELING	
WD-2	VINYL WOOD PLANK - CARBO
WD-3	SHEET PANELING
WD-4	DOUGLAS FIR
WD-5	CUSTOM MDF RED OAK VENEER PANEL
WD-6	RED OAK
WD-7	BEADBOARD
WD-9	PINE
WD-10	VINYL WOOD PLANK - CLASSIC OAK
WOOD STAIN	
WS-1	CUSTOM STAIN
FLOOR TILE	
FT-1	LIMESTONE PEARL MATTE
FT-2	ITALIAN OAK WOOD MATTE
WD-2	VINYL WOOD PLANK - CARBO
QT-1	DIABLO RED #OT01
WALL TILE	
WT-1	MUSTARD
WT-2	ARCHITECTURAL GREY
WT-4	ARCHITECTURAL GRAY
WT-5	ANTHRACITE
TILE BASE	
TB-2	CHAMBERLAIN
VB-1	VINYL BASE
QT-1	DIABLO RED #OT01
GROUT	
G-1	BLACK
G-2	CHARCOAL
G-3	BLACK "KERAPOXY"
G-4	IRON
SOLID SURFACE	
SS-1	SHARPHAM - WATERSTONE COLLECTION
SS-2	SERENE SAGE
PLASTIC PANEL	
PP-1	PEARL GRAY
PP-2	WHITE
METAL FINISHES	
MT-1	METAL CHAIR RAIL
MT-2	BLACK MALLEABLE IRON RAIL SYSTEM
MT-3	METAL CORNER GUARD
MT-4	WROUGHT IRON BLACK
MT-5	DILEX-AHKA 80 AE
CEILING	
CT-1	VINYL FACED GYPSUM CEILING PANEL
CT-2	AMERICAN TIN CEILING TILE
PLASTIC LAMINATE	
PL-1	EGGSHELL WHITE
PL-2	BLACK
PL-3	SLEEPING IN
GLASS	
GL-1	NIAGARA

ARCHITECT:

DAVID SCOTT WINDLE, AIA

6201 CAMPUS CIRCLE DRIVE E.
IRVING, TEXAS 75038
TEL: 972.870.1288
WWW.IDSTUDIO4.COM
E-MAIL scottw@idstudio4.com

CORPORATE:
BRINKER RESTAURANT CORPORATION, A VIRGINIA CORPORATION
3000 OLYMPUS BLVD.
DALLAS, TEXAS 75019
972.980.9917
www.brinker.com

09/23/2024

ISSUE FOR BID

THESE DOCUMENTS ARE FOR BIDDING PURPOSES ONLY. DO NOT USE FOR CONSTRUCTION.

RESTAURANT #CH1679
PROTOTYPE 18.5FS

CHILI'S TOOELE
951 N MAIN STREET
TOOELE, UT 84074

CLIENT: BRINKER RESTAURANT CORP. A VIRGINIA CORPORATION

DATE	DESCRIPTION
6/27/2024	ISSUE FOR PERMIT
9/23/2024	ISSUE FOR BID

	DATE	DESCRIPTION
2	08.23.2024	OWNER COMMENTS

PROJECT NUMBER:

CHI24007

SHEET TITLE:

BAR COUNTER PLAN, ELEVATIONS AND DETAILS

SHEET NUMBER:

A505

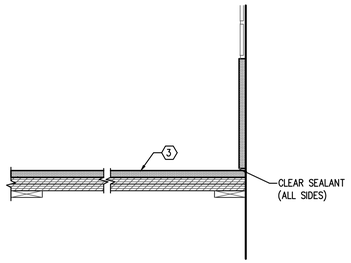

B1

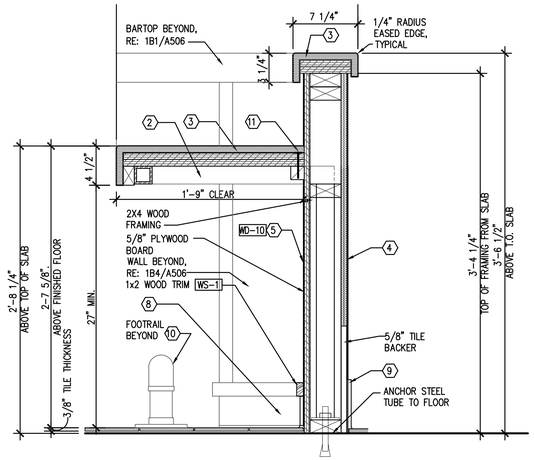

B2

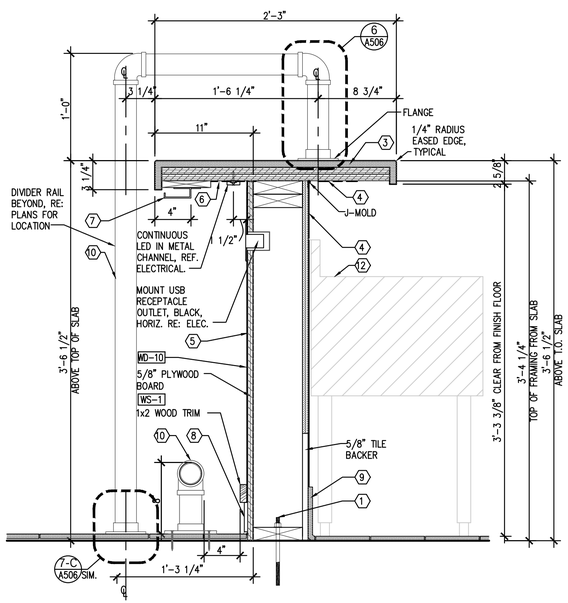

B3

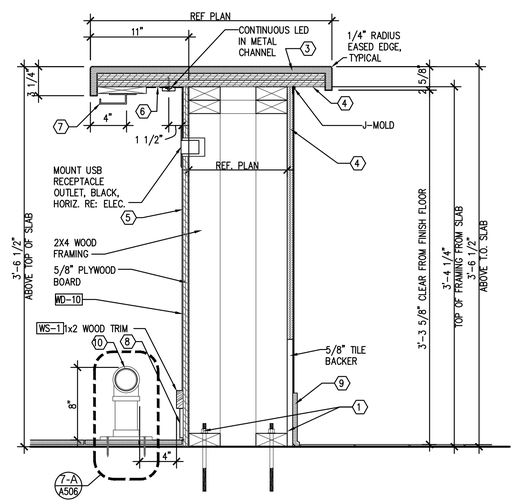

B4

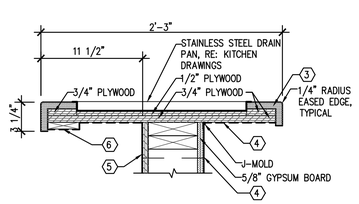

B5

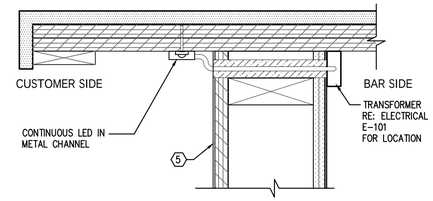

LED TRANSFORM SECTION 2
3"=1'-0"

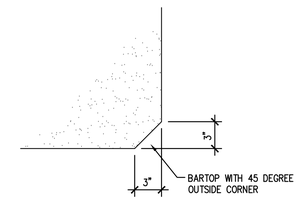

BARTOP PLAN DETAIL 3
1 1/2"=1'-0"

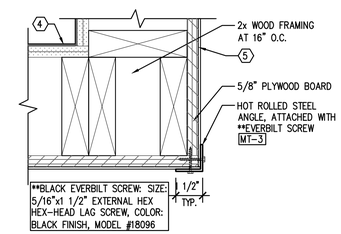

BAR DIE WALL CORNER TRIM - RIGHT SIDE 4
3"=1'-0"

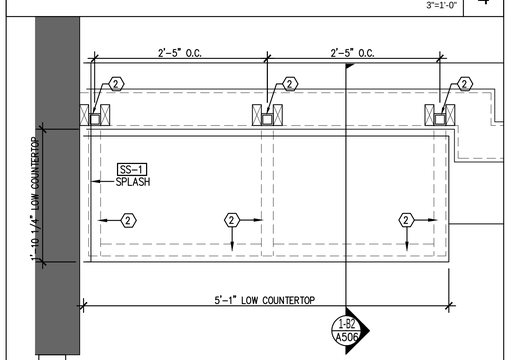

ADA COUNTER ENLARGED PLAN 5
1"=1'-0"

ALL THREADS TO BE CONCEALED AT CONNECTION. NO PIPE THREADS TO BE VISIBLE.

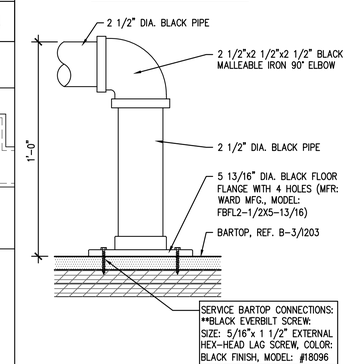

BARTOP DIVIDER RAIL DETAIL 6
3"=1'-0"

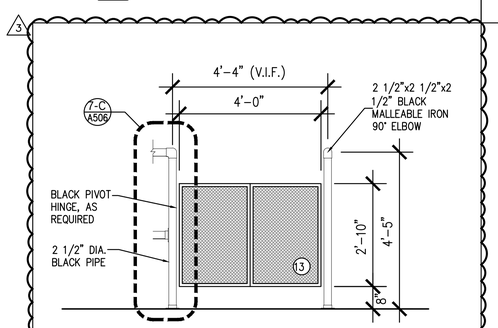

BAR GATE 8
1/2"=1'-0"

ALL THREADS TO BE CONCEALED AT CONNECTION. NO PIPE THREADS TO BE VISIBLE.

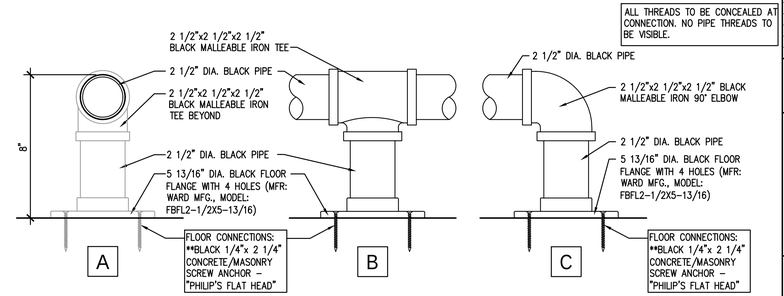

FOOTRAIL DETAILS 7
3"=1'-0"

BARTOP/BARDIE WALL SECTION 1
1 1/2"=1'-0"

	KEYED NOTES
1	2x WOOD STUD WALL. REFER TO PLAN. SECURE TO SLAB WITH EPOXY ANCHOR BOLTS.
2	2x2x1/4" STEEL TUBE SUPPORT.
3	3/4" SOLID SURFACE (SS-1) BAR TOP ON (2) LAYERS 3/4" MARINE GRADE PLYWOOD. EXPOSED FACE AT UNDERSIDE OF BAR TOP TO HAVE BLACK MELAMINE FINISH.
4	PP-1 PLASTIC PANEL ON 5/8" WATER RESISTANT GYPSUM WALL BOARD.
5	WD-10 FINISH AS SCHEDULED. PAINT 5/8" PLYWOOD WALL BOARD PRIOR TO INSTALL OF WD-10 FINISH.
6	UNDERSIDE OF BAR FINISHED WITH BLACK MELAMINE.
7	PURSE HOOK, REFER TO HARDWARE NOTES ON SHEET A103. PAINT EXPOSED 1"X6" BLOCKING (P-5).
8	TB-2 TILE BASE APPLIED TO CUSTOMER SIDE OF WALL
9	QT-1 QUARRY TILE BASE APPLIED TO SERVICE SIDE OF WALLS. WALLS AND BASE MUST BE INSTALLED PRIOR TO TILE FLOORING SO THAT FLOORING MAY BUTT UP TO BASE.
10	2 1/2" DIAMETER THREADED BLACK IRON PIPE DIVIDER RAIL AND FITTINGS. DRILL EXPANSION BOLT COLLAR TO CONCRETE SLAB AND BARTOP.
11	1/2" BOLT AT 12" O.C. RECESSED INTO PLYWOOD AND BOLTED THROUGH BLOCKING
12	BACK BAR EQUIPMENT. VERIFY SPECIFICATIONS WITH OWNER PRIOR TO FABRICATION OF COUNTERTOP.

ARCHITECT:

DAVID SCOTT WINDLE, AIA

6201 CAMPUS CIRCLE DRIVE E.
IRVING, TEXAS 75038
TEL: 972.870.1288
WWW.IDSTUDIO4.COM
E-MAIL scottw@idstudio4.com

CORPORATE:
BRINKER RESTAURANT CORPORATION,
A VIRGINIA CORPORATION
3000 OLYMPUS BLVD.
DALLAS, TEXAS 75019
972.980.9917
www.brinker.com

09/23/2024

ISSUE FOR BID

THESE DOCUMENTS ARE FOR BIDDING PURPOSES ONLY. DO NOT USE FOR CONSTRUCTION.

RESTAURANT #CH1679
PROTOTYPE 18.5FS

CHILI'S TOOELE
951 N MAIN STREET
TOOELE, UT 84074

CLIENT: BRINKER RESTAURANT CORP.
A VIRGINIA CORPORATION

DATE	DESCRIPTION
6/27/2024	ISSUE FOR PERMIT
9/23/2024	ISSUE FOR BID

	DATE	DESCRIPTION
3	09.10.2024	CITY COMMENTS

PROJECT NUMBER:
CHI24007

SHEET TITLE:
BAR TOP/
BAR-DIE WALL
SECTIONS AND
DETAILS

SHEET NUMBER:
A506

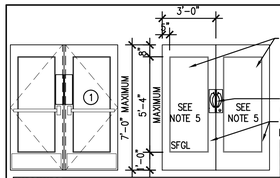

HARDWARE			
2	Continuous Hinge	Pemko BLFMSLF TKS1234UCBL21	Black
1	Removable Mullion	Dorma 1330-8 695, 7' Aluminum with Weatherstrip Mullion	695
2	Exit Device	Detex V40 711, CD, Device Only – Exit Only, No Trim–Black	693
2	Cylinder	LockNet LN2049 I/C	613
1	Cylinder	LockNet LN2050	613
3	Keying	LockNet I/C Core	626
2	Door Pull	PEPPER PULL (by Owner)	
1	Door Pull Plate	Rockwood 70CBSP CFC PULL PREP	Black
1	Door Pull Plate Finish	Rockwood 70CBSP PULL PREP	Black
2	Push Plate	Rockwood 70 Black Powder Coat 4.5" x 26". Mount 1" above the exit device on interior side of door.	Black
2	Surface Closer	DormaKaba 8916 SDS SN1 693	Black
2	Kick Plate	Rockwood K1050 10" x 2" LESS DOOR WIDTH; Black Powder coat	Black
1	Threshold	NGP 3250KB	Dark Bronze
1	Weatherstripping	NGP Door Sweep C627DKB	Dark Bronze
2	Gasketing	NGP Perimeter Seal 160SDKB	Dark Bronze

NOTE: DOOR AND FRAME BY GENERAL CONTRACTOR. NO SUBSTITUTIONS FROM SPECIFICATIONS. INCREASE MET FRAME SIZE BY 1/2" TO ALLOW FOR CONTINUOUS HINGE. DOOR COLOR: EP-5, SL4A1183 "SALUTE RED"-FLUROPON PREMIERE CLEARCOAT 390X320

DOOR ELEVATION 1 — 1/4"=1'-0"

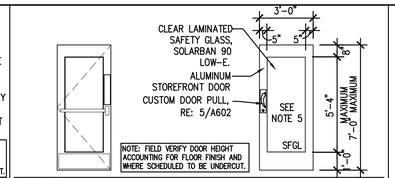

HARDWARE			
2	Continuous Hinge	Pemko BLFMSLF TKS1234UCBL21	Black
1	Exit Device	Detex V40 711, CD, Device Only – Exit Only, No Trim–Black	Black
1	Cylinder	LockNet LN2049 I/C	613
1	Cylinder	LockNet LN2050	613
2	Keying	LockNet I/C Core	613
1	Door Pull	PEPPER PULL (BY OWNER)	
1	Push Plate	Rockwood 70 Black Powder Coat 4.5" x 26". Mount 1" above the exit device on interior side of door.	Black
1	Door Pull Plate	Rockwood 70CBSP CFC Pull Prep	BSP
1	Surface Closer	DormaKaba 8916 SDS SN1 693	Black
1	Kick Plate	Rockwood K1050 10" x 2" LESS DOOR WIDTH; Black Powder Coat	Black
1	Threshold	NGP 3250KB	Dark Bronze
1	Weatherstripping	NGP Drip Cap 160DKB	Dark Bronze
1	Weatherstripping	NGP Door Sweep C627DKB	Dark Bronze
1	Gasketing	NGP Perimeter Seal 160SDKB	Dark Bronze

NOTE: DOOR AND FRAME GENERAL CONTRACTOR. NO SUBSTITUTIONS FROM SPECIFICATIONS. INCREASE MET FRAME SIZE BY 1/2" TO ALLOW FOR CONTINUOUS HINGE. DOOR COLOR: EP-5, SL4A1183 "SALUTE RED"-FLUROPON PREMIERE CLEARCOAT 390X320

DOOR ELEVATION 2 — 1/4"=1'-0"

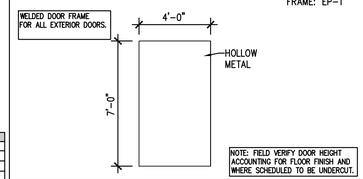

HARDWARE			
1	Continuous Hinge	Pemko CFM83HD1, Full Mortise Heavy Duty Continuous Geared Aluminum Hinge	C
1	Dead Lock	Yale B-D112 x Less Core 626, Cylinder x Thumbturn Deadbolt	626
1	Door Pull	Rockwood 131 US28, Cast Door Pulls	US28
1	Threshold	NGP 425–48", Threshold – ½"x5"	
1	Weatherstripping	NGP 160VA–48"x84", Perimeter Seal – ⅜"	A
1	Gasketing	NGP C627A–48", Nylon Brush – ⅜", 1 7/8"	A
1	Miscellaneous Item	NGP 16A, Drip Strip – 1 ½"x2 ½"	A
1	Miscellaneous Item	Don-Jo HDCC–3012–626, Heavy Duty Crash Chain	626

NOTE: LOUVER TO HAVE INSECT SCREEN. DOOR PREFINISHED PER COLOR IN ELEVATION

DOOR ELEVATION 3 — 1/4"=1'-0"

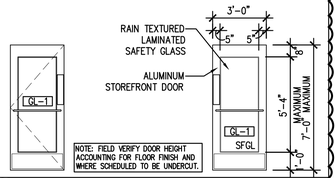

HARDWARE			
1	Pivot Hinge	Center pivot hinge	Black
2	Push Plate	Rockwood 70 Black Powder Coat 4.5" x 26". Mount 1" above the exit device on interior side of door.	Black
2	Push Bar	Rockwood 47 BSP, Mount at 41" A.F.F.	BSP
1	Concealed Closer	Calibre CA6900 Series– Model#6900–B06911; function: 105 NHO	Black
2	Kick Plate	Rockwood K1050 10" x 2" LESS DOOR WIDTH; Black Powder Coat	Black

NOTE: DOOR AND FRAME GENERAL CONTRACTOR. NO SUBSTITUTIONS FROM SPECIFICATIONS. INCREASE MET FRAME SIZE BY 1/2" TO ALLOW FOR CONTINUOUS HINGE. DOOR COLOR: POWDER COATED BLACK

DOOR ELEVATION 4 — 1/4"=1'-0"

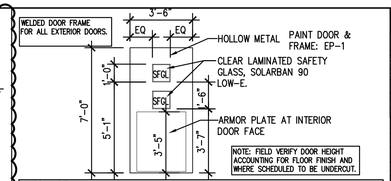

HARDWARE			
1	Miscellaneous Item	Misc AD–121A2, Transformer 12VDC 1.2, Power supply for Bell.	
1	Continuous Hinge	Pemko CFM83HD1, Full Mortise Heavy Duty Continuous Geared Aluminum Hinge	C
1	Exit Device	Detex 1003 C 630 LHR LD 4, Key Retracts Latch	630
1	Cylinder	LockNet LN2049C, Mortise Cylinder SFIC w/ Yale Cam Rim Cylinder	626
1	Cylinder	LockNet LN2050, Rim Cylinder SFIC 626 – Mortise Cylinder	626
2	Keying	LockNet I/C Core, Small Format I/C core 14001400	626
1	Surface Closer	Dorma 8916 SDS SN1 689, Spring Door Saver Parallel Arm	Black
1	Kick Plate	Rockwood K1050 32"x40" US32D, Standard Duty Metal Door Plate	US32D
1	Threshold	NGP 425–42", Threshold – ½"x5"	A
1	Weatherstripping	NGP 160SA–42" x 84", Perimeter Seal – ⅜"	A
1	Gasketing	NGP C627A–42", Nylon Brush – ⅜", 1 7/8"	A
1	Miscellaneous Item	NGP 16A–46", Drip Strip – 1 ½"x 2 ½" – Rain Drip	A
2	Miscellaneous Item	Edwards 435–4E1, Edwards Vibrating Bell 12VDC – Edwards Bell	
2	Miscellaneous Item	Securitron PBL–2, 1" Stainless Momentary, DPDT, Bi-Color LED Push Button for bell	

NOTE: WINDOWS WITH SAFETY GLASS (2). DOOR PREFINISHED PER COLOR IN ELEVATION

DOOR ELEVATION 5 — 1/4"=1'-0"

HARDWARE SCHEDULED

NOTE: ALL HARDWARE TO BE PROVIDED AS SPECIFIED - NO SUBSTITUTIONS ALLOWED

NOTE: WHEN REQUESTED BY CHILI'S, PROVIDE COAT HOOKS AND INSTALL AS DIRECTED BY CHILI'S REP. SEE BELOW FOR SPECIFICATION.

COAT HOOK MANUFACTURER: BESLAGSBODEN, MODEL: BK248M, FINISH: BRUSHED CHROME. LOCATIONS AND QUANTITY: TBD BY CHILI'S REP.

KEYING: ALL CYLINDER SHALL BE KEYED ALIKE. PROVIDE TWO (2) CHANGE KEYS AND ONE (1) CONTROL KEY.

WINDOW NOTES:

1. ALL EXTERIOR GLASS TO BE LOW "E" INSULATED
2. ALL DIMENSIONS ARE ROUGH OPENING (R.O.)
3. ALL EXTERIOR FRAMES 2"x4.5", ALUMINUM UNLESS NOTED OTHERWISE
4. ALL STOREFRONT IS ANNODIZED ALUMINUM – DARK BRONZE
5. PROVIDE CLEAR, LAMINATED SAFETY AND IMPACT SOLARBAN 90 LOW-E GLASS WHERE NOTE 5 IS SHOWN ON WINDOW ELEVATIONS.
6. ALL INTERIOR FRAMES 2"x4.5", ALUMINUM UNLESS NOTED OTHERWISE, RE: 3/A602

DOOR NOTES:

1. DOOR HANDLES, PULLS, LATCHES LOCKS AND OTHER OPERATION DEVICES ON DOORS REQUIRED TO BE ACCESSIBLE BY ADA SHALL NOT REQUIRE TIGHT GRASPING, TIGHT PINCHING, OR TWISTING OF THE WRIST TO OPERATE, AS REQUIRED BY IBC1010.1.9.1.
2. ALL INTERIOR DOORS (EXCEPT FIRE DOORS) FORCE FOR PUSHING OR PULLING SHALL NOT EXCEED 5 POUNDS. ALL OTHER – SWINGING, SLIDING, AND FOLDING – DOOR LATCHES SHALL RELEASE WHEN SUBJECT TO A 15-POUND FORCE, SHALL BE SET IN MOTION WHEN SUBJECT TO A 30-POUND FORCE, AND SWING TO A FULL-OPEN POSITION WHEN SUBJECTED TO A 15-POUND FORCE AS REQUIRED IBC 1010.1.3.
3. DOOR CLOSERS AND GATE CLOSERS SHALL BE ADJUSTED SO THAT FROM AN OPEN POSITION OF 90 DEGREES, THE TIME REQUIRED TO MOVE THE DOOR TO A POSITION OF 12 DEGREES FROM THE LATCH IS 5 SECONDS MINIMUM., AS REQUIRED BY ADA STANDARDS 404.2.8.1.

GENERAL NOTE

G.C. TO FIELD VERIFY R.O. DIMENSIONS PRIOR TO STOREFRONT ORDER.

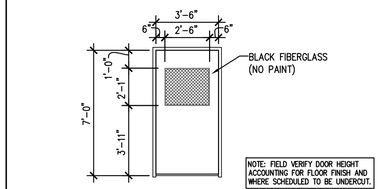

HARDWARE			
1	Miscellaneous Item	Misc AD–121A2, Transformer 12VDC 1.2A Transformer	
1	Continuous Hinge	Pemko CFM83HD1, Full Mortise Heavy Duty Continuous Geared Aluminum Hinge	C
1	Exit Device	Detex 1003 C 630 LHR LD, Key Retracts Latch	630
1	Cylinder	LockNet LN2049 I/C Mortise Cylinder, I/C Mortise Cylinder US10B	613
1	Cylinder	LockNet LN2050, Rim Cylinder SFIC 626	626
1	Keying	LockNet I/C Core, Small Format I/C core 14001400	626
1	Electric Strike	HES 9500–24VDC–630–200SMJ, Surface Mounted Electric Strike, Fire Rated	630
1	Elec. Lock Device	Securitron MKA, Mortise Keywitch, SPDT	
1	Surface Closer	Dorma 8916 SDS SN1 693, Spring Door Saver Parallel Arm	Black
1	Accessory	HES 2002F–24, AC Plug–in Transformer	
1	Miscellaneous Item	Edwards 435–4E1, Edwards Vibrating Bell 12VDC – Edwards Bell	C
1	Miscellaneous Item	Securitron PB2, 2" Square Momentary, SPDT, Illuminated	
2	Miscellaneous Item	Securitron PBL–2, 1" Stainless Momentary, DPDT, Bi-Color LED	

DOOR ELEVATION 6 — 1/4"=1'-0"

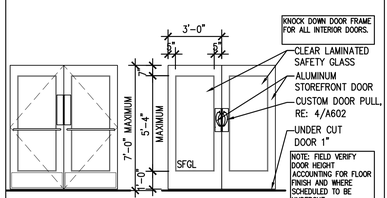

HARDWARE			
2	Continuous Hinge	Pemko BLFMSLF TKS1234UCBL21	Black
2	Door Pull	Pepper pull (by Owner)	
1	Door Pull Plate	Rockwood 70CBSP CFC Pull Prep	BSP
2	Push Plate	Rockwood 70" Black Powder Coat 4.5" x 26", Mount at 44" A.F.F. TO B.O. PLATE.	BSP
2	Push Bar	Rockwood 47 BSP, Mount at 41" A.F.F.	BSP
2	Surface Closer	DormaKaba 8916 AF86P 693	Black
2	Kick Plate	Rockwood K1050 10"x2" LESS DOOR WIDTH; Black Powder Coat	Black
2	Wall Door Stop	Rockwood 409 US10B	Bronze

NOTE: DOOR AND FRAME BY GENERAL CONTRACTOR. DOOR TO HAVE SMOOTH EDGES AND NO DOOR GASKET. NO SUBSTITUTIONS FROM SPECIFICATIONS DOOR COLOR: EP-5, SL4A1183 "SALUTE RED"-FLUROPON PREMIERE CLEARCOAT 390X320

DOOR ELEVATION 7 — 1/4"=1'-0"

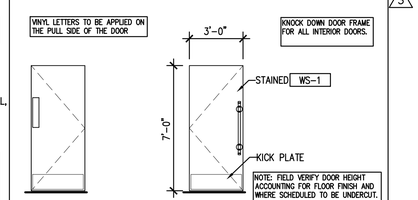

HARDWARE			
3	Standard Hinge	McKinney TA2714 4 1/2"x4 1/2" D4 Black	D4
1	Door Pull	Custom. See sheet A602 for material types and mounting details.	Black
1	Push Plate	Rockwood 70C BSP MOUNT AT 44" A.F.F. TO B.O. PLATE, 1" OFF EDGE	BSP
1	Surface Closer	DormaKaba 8616 AF86P 689	689
2	Kick Plate	Rockwood K1050 10"x2", LESS DOOR WIDTH; Black Powder Coat	Black
1	Wall Door Stop	Rockwood 409 US10B	Bronze
3	Door Silencer	Rockwood 608	
1	Toe Pull	StepNpull	Black
3	Door Silencer	Rockwood 608, Door Silencers for Metal Frame	

NOTE: UNDERCUT DOOR BY 1 1/2", COLOR: WS-1.

DOOR ELEVATION 8 9 — 1/4"=1'-0"

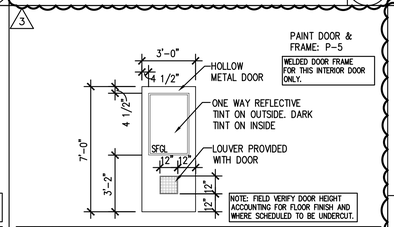

HARDWARE			
3	Standard Hinge	McKinney MPB79 4 1/2"x4 1/2" US26D, Steel Standard Weight Five Knuckle	US26D
1	Lockset	Yale B–AU 5405EN 626 – LH, Storeroom Function Lockset	626
1	Keying	LockNet I/C Core, Small Format I/C core 14001400	626
1	Surface Closer	Dorma 8616 AF86P 689, Parallel, Regular, and Top Jamb, Non–Hold Open Arm	689
1	Wall Door Stop	Rockwood 409 US26D, Wrought Concave Bumper, SMS & Plastic Toggle	US26D
1	Threshold	NGP 424E–36", Threshold – ½"x4"	
2	Gasketing	NGP 600–36", Nylon Brush – ½", ⅞"	
3	Door Silencer	Rockwood 608, Door Silencers for Metal Frame	

NOTE: GLASS TO BE ONE-WAY VIEW

DOOR ELEVATION 10 — 1/4"=1'-0"

NOT USED 11 — N/A

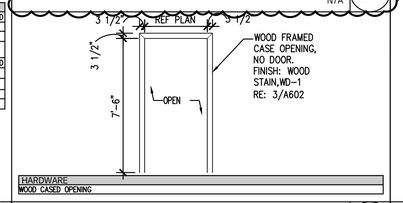

HARDWARE
WOOD CASED OPENING

CASED OPENINGS 12 — 1/4"=1'-0"

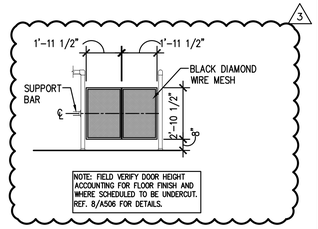

BAR GATE 13 — 1/4"=1'-0"

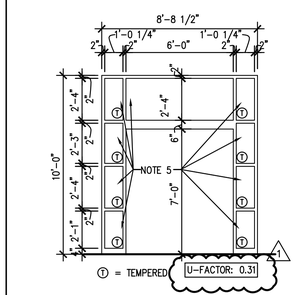

WINDOW ELEVATION A — 1/4"=1'-0"

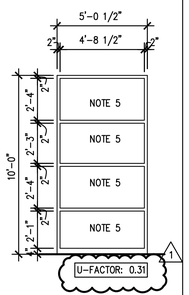

WINDOW ELEVATION B — 1/4"=1'-0"

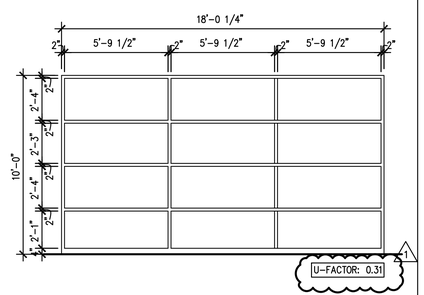

WINDOW ELEVATION C — 1/4"=1'-0"

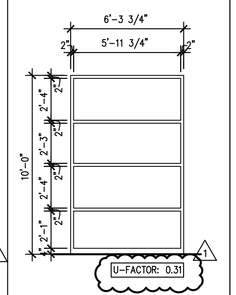

WINDOW ELEVATION D — 1/4"=1'-0"

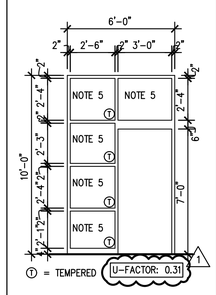

WINDOW ELEVATION E — 1/4"=1'-0"

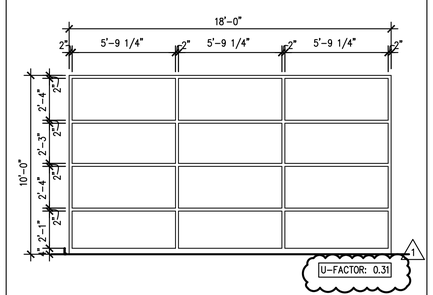

WINDOW ELEVATION F — 1/4"=1'-0"

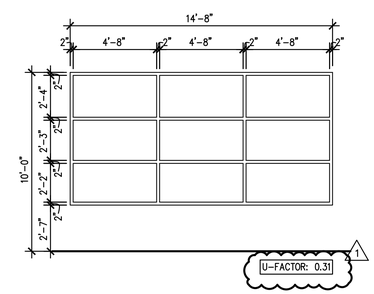

WINDOW ELEVATION G — 1/4"=1'-0"

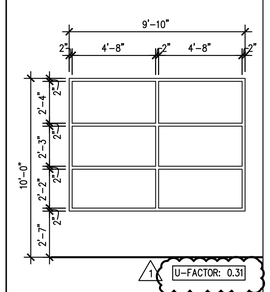

WINDOW ELEVATION H — 1/4"=1'-0"

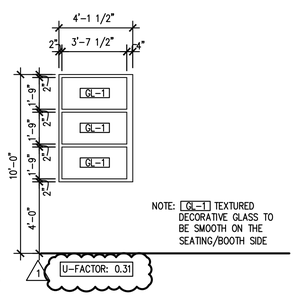

WINDOW ELEVATION J — 1/4"=1'-0"

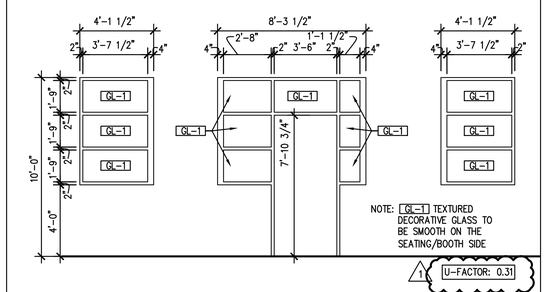

WINDOW ELEVATION K — 1/4"=1'-0"

ARCHITECT:

DAVID SCOTT WINDLE, AIA

6201 CAMPUS CIRCLE DRIVE E.
IRVING, TEXAS 75038
TEL: 972.870.1288
WWW.IDSTUDIO4.COM
E-MAIL scottw@idstudio4.com

CORPORATE:
BRINKER RESTAURANT CORPORATION,
A VIRGINIA CORPORATION
3000 OLYMPUS BLVD.
DALLAS, TEXAS 75019
972.980.9917
www.brinker.com

09/23/2024
ISSUE FOR BID
THESE DOCUMENTS ARE FOR BIDDING PURPOSES ONLY. DO NOT USE FOR CONSTRUCTION.

RESTAURANT #CH1679
PROTOTYPE 18.5FS

CHILI'S TOOELE
951 N MAIN STREET
TOOELE, UT 84074

CLIENT: BRINKER RESTAURANT CORP.
A VIRGINIA CORPORATION

DATE	DESCRIPTION
6/27/2024	ISSUE FOR PERMIT
9/23/2024	ISSUE FOR BID

△	DATE	DESCRIPTION
2	08.23.2024	OWNER COMMENTS
3	09.10.2024	CITY COMMENTS

PROJECT NUMBER:
CHI24007

SHEET TITLE:
DOOR AND WINDOW SCHEDULES

SHEET NUMBER:
A601

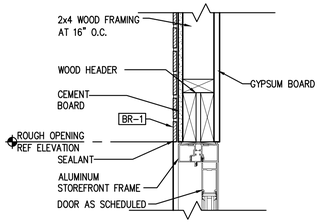

HEAD

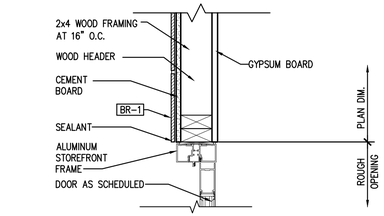

JAMB

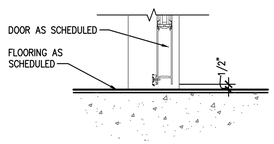

SILL

HOSTESS

ENTRY VESTIBULE

INTERIOR DOOR DETAILS 1 | 1 1/2"=1'-0"

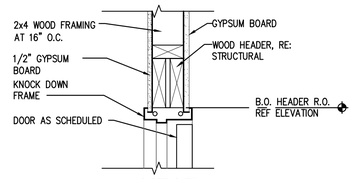

HEAD

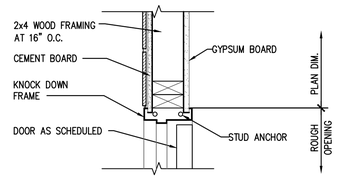

JAMB

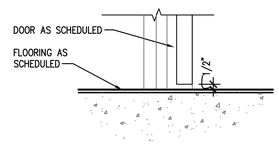

SILL

RESTROOM

VESTIBULE

INTERIOR DOOR DETAILS 1 | 1 1/2"=1'-0"

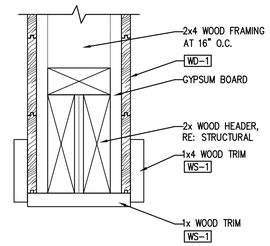

DETAIL 3 | 3"=1'-0"

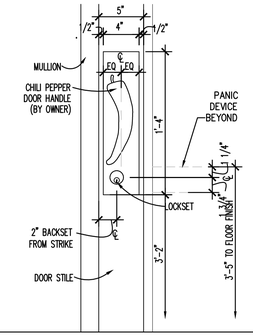

PUSHBAR/PEPPER DETAIL(TO GO ENTRY) N.T.S. | 5

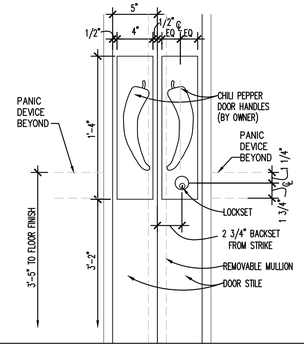

PUSHBAR/PEPPER DETAIL (MAIN ENTRY) N.T.S. | 4

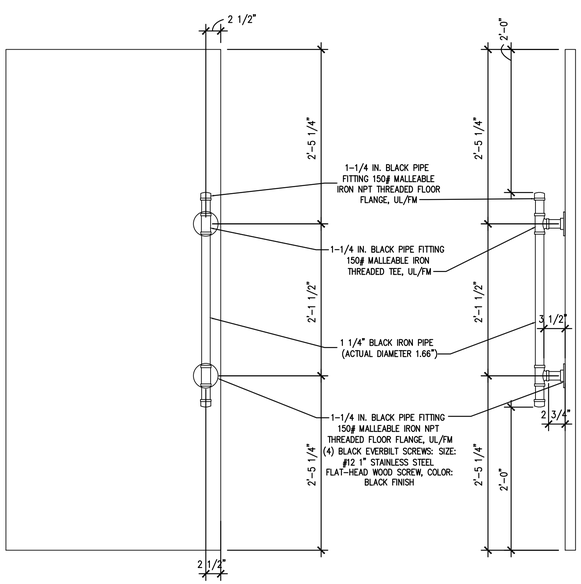

ELEVATION

ALL THREADS TO BE CONCEALED AT CONNECTION. NO PIPE THREADS TO BE VISIBLE.

SECTION

CUSTOM PULL BAR (RESTROOM) 1"=1'-0" | 6

ARCHITECT:

DAVID SCOTT WINDLE, AIA

6201 CAMPUS CIRCLE DRIVE E.
IRVING, TEXAS 75038
TEL: 972.870.1288
WWW.IDSTUDIO4.COM
E-MAIL scottw@idstudio4.com

CORPORATE:
BRINKER RESTAURANT CORPORATION, A VIRGINIA CORPORATION
3000 OLYMPUS BLVD.
DALLAS, TEXAS 75019
972.980.9917
www.brinker.com

09/23/2024
ISSUE FOR BID
THESE DOCUMENTS ARE FOR BIDDING PURPOSES ONLY. DO NOT USE FOR CONSTRUCTION.

RESTAURANT #CH1679
PROTOTYPE 18.5FS

CHILI'S TOOELE
951 N MAIN STREET
TOOELE, UT 84074

CLIENT: BRINKER RESTAURANT CORP. A VIRGINIA CORPORATION

DATE	DESCRIPTION
6/27/2024	ISSUE FOR PERMIT
9/23/2024	ISSUE FOR BID

△	DATE	DESCRIPTION

PROJECT NUMBER:
CHI24007

SHEET TITLE:
INTERIOR DOOR DETAILS

SHEET NUMBER:
A602

KITCHEN EQUIPMENT SCHEDULE

Sch #	Qty.	Description	Mfg ID	Item Number	Provided By:	Installed By:	NSF Listed	Custom Fab.	Casters/ Fixed	Water	Drain
001	1EA	Fly Fan	BERNER	SHD07-1042A	KES	KES	YES				
002	1EA	Walk-in Cooler/Freezer	TBD	005-1600-00-002	Owner	Owner	YES				Indirect
003	1LOT	Walk-In Shelving	INTERMETRO	005-1600-00-003	KES	KES	YES				
004	2EA	Ice Machines	MANITOWOC	IYF-1400C	Owner	Owner/G.C.	YES			Cold	
005	1EA	Follet Ice Bin	FOLLETT	SG1650SWFlex	Owner	Owner	YES				Indirect
007A	1LOT	Dry Storage Shelving	INTERMETRO	005-1600-00-007A	KES	KES	YES				
007B	1LOT	Color Bin Markers	CSM6	Smallware	Owner	YES	YES				
007C	1EA	Silverware Rolling Table	INTERMETRO		KES	KES	YES		Casters		
008A	1EA	Bulk CO2 System	CARBONATIC	CARBOMIZER 550	Owner	KES	YES				
008B	1EA	Regulator Package Kit CO2	MICROMATIC	942B	Owner	Owner	YES				
009	1EA	Bag in Box Storage Rack	INTERMETRO	005-1600-00-009	KES	KES	YES		Fixed		
011	1EA	Ecolab Hose Bibb	ECOLAB		Owner	Owner	YES				
012	1ASY	Fire Suppression System	ANSUL	R102	Owner	G.C.	YES				
015	1EA	Safe	ROLLAND	EV-2417	KES	KES					
016	1EA	2-Tier Dunnage Rack (Freezer)	ADVANCE TAB	KR-42	KES	KES	YES				
016A	1EA	Dunnage Rack (Freezer)	ADVANCE	DUN-2442	KES	KES	YES				
023	1EA	Walk-in Refrigeration System	TBD	005-1600-00-023	Owner	Owner/G.C.	YES				
025	1EA	Liquor Storage Cage	INTERMETRO	SEC33EK3	KES	KES	YES		Casters		
102	1EA	Prep Table w/ Sink & Sink cover	CUSTOM	005-1600-00-102	KES	KES	YES			H/C	Indirect

KITCHEN EQUIPMENT SCHEDULE

Sch #	Qty.	Description	Mfg ID	Item Number	Provided By:	Installed By:	NSF Listed	Custom Fab.	Casters/ Fixed	Water	Drain
103	1EA	Prep Sink Faucet	COMPONENT	KL61-8012 -SE1	KES	Plumber	YES			H/C	
108	1EA	Can Opener	EDLUND	#1	KES	KES	YES				
112	1EA	Exhaust System - Prep	CAPTIVE AIRE	5430ND	Owner	G.C.	YES				
117	1EA	Bermixer	ROBOT COUPE	MP450 COMBI	Smallwares	Owner	YES				
135	3EA	Trash Can	RUBBERMAID	Slim Jims	Smallwares	Owner	YES		Casters		
146A	6EA	12" Wall Hung Hand Sink	GLASTENDER	WHS-12	KES	KES	YES				
147	4ASY	Smart Wall System	INTERMETRO	005-1600-00-147	KES	KES	YES				
148	1EA	Work Table	CUSTOM	005-1600-00-148	KES	KES	YES				
201	1ASY	Fryer-4 Bank	HENNY PENNY	EEG164	KES	KES	YES		Casters		
202A	1EA	Quick DIsconnect-Gas (3/4")	DORMONT	43-S0239-48	KES	KES	YES				
206	3EA	Timer	FAST	Z120120HFC	KES	KES	YES				
210A	1EA	Batter Station	DELFIELD	DCH-BS-32LP	KES	KES	YES		Casters		
210B	1EA	Batter Station	DELFIELD	DCH-BS-32RP	KES	KES	YES		Casters		
215	1EA	Griddle	VULCAN	948RXCH1	KES	KES	YES				
216	1EA	Rethermalizer	FRYMASTER	FE155-CSD	KES	KES	YES		Casters	Hot	
223	1EA	Reach-In Freezer	BEVERAGE AIR	HF1HC-1HS-18	KES	KES	YES		Casters		
228	1EA	Exhaust System - Fryer	CAPTIVE AIRE	3650BD	Owner	G.C.	YES				
229	1EA	Exhaust System - Cookline	CAPTIVE AIRE	5430ND	Owner	G.C.	YES				
231	1EA	Fajita Meat Refrigerator	DELFIELD	DCH-FS-27-DRWP	KES	KES	YES		Casters		

KITCHEN EQUIPMENT SCHEDULE

Sch #	Qty.	Description	Mfg ID	Item Number	Provided By:	Installed By:	NSF Listed	Custom Fab.	Casters/ Fixed	Water	Drain
240	1EA	Combi Oven	CONVOTHERM	C4 ET 6.20ESCH1-DOUBLE	KES	KES	YES				
240B	1EA	Combi Oven Water Filter or RO Sytem	XPRESS	TBD	KES	KES	YES				
240C	1LOT	R.O. System Shelving	CUSTOM	005-1600-00-240C	KES	KES	YES				
241	2EA	Turbo Chef Ovens w/24" TC Stand	TURBO CHEF	DOUBLE BATCH	KES	KES	YES		FIXED		
246	1EA	Refrigerated Griddle Stand	DELFIELD	DCH-RES-48LP	KES	KES	YES		Casters		
253	2EA	Induction Plate Heater	SPRING USA	SM-351C-F	Smallwares	KES	YES				
257	1EA	Quad Holding Bins	Carter Hoffmann	MZ223SCBR	KES	KES	YES				
270	1SET	Positioning System	DORMONT	SAFETY-SET	KES	KES					
300	1EA	Dishmachine	ECOLAB	EC-44	Owner	KES	YES			Hot	Indirect
302A	1EA	Pre-Rinse Spray Assembly	COMPONENT	KN50-1000-BRLS	KES	Plumber	YES			H/C	
302B	2EA	Pre-Rinse Spray Valve	FISHER	2949	KES	Plumber	YES				
303	1EA	Clean Dish Storage Rack	INTERMETRO	005-1600-00-303	KES	KES	YES		Casters		
304	1EA	Spray Assembly - Prep	COMPONENT	KL60-1050-BSP6	KES	Plumber	YES			H/C	
305	1EA	Pot Sink Faucet	COMPONENT	KL61-8012-SE1	KES	Plumber	YES			H/C	
321	1EA	Under Counter Dish Shelving	INTERMETRO	005-1600-00-321	KES	KES	YES		Casters		
400	1EA	Soda Tower	LANCER	ICD 23308	Owner	Owner	YES				Indirect
401	1EA	Tea Dispenser	BUNN-O-MATIC	TDO4	Smallwares	KES	YES			Cold	Indirect
402	1EA	Combination Coffee and tea	BUNN-O-MATIC	ITCB	Smallwares	KES	YES			Cold	Indirect
406	1LOT	Rack Dolly Beverage	RABURN	WWD-100 BEV	Smallwares	Owner	YES		Casters		
407	1LOT	Wall Storage System-Beverage Station	INTERMETRO	005-1600-00-407	KES	KES	YES				
408	2EA	Carbonators	LANCER	E300297	Owner	Owner	YES			Cold	
409	1LOT	To Go Assembly Station (Gray Finish)	INTERMETRO	005-1600-00-409	KES	KES	YES		Fixed		
409B	1EA	To Go Cooler	DELFIELD	18660BUCMP	KES	KES	YES		Casters		
409C	1LOT	To Go Smart Wall Packing Station	INTERMETRO	005-1600-00-409C	KES	KES	YES		Fixed		
409D	1LOT	To Go Staging	INTERMETRO	005-1600-00-409D	KES	KES	YES		Fixed		
410	4EA	POS System	MICROS		Owner	Owner					
411	1EA	Day Dot Printer w/ Shelf	DAYMARK	9700	Owner	G.C.					
418	1EA	Quick Disconnect-Water	DORMONT	71-111518-48	Smallwares	KES	YES			Cold	
420	1EA	Tortilla/Chip Cabinet w/Stand	CARTER HOFFMAN	CW4	KES	KES	YES				
423	1EA	U/C Refrigerator (Beverage)	BEVERAGE AIR	SPE27HC-CHI	KES	KES	YES		Casters		
440	2EA	Coffee Dispenser	BUNN-O-MATIC	Smallwares	Smallwares	KES	YES				
503A	1EA	UC Refrigerator	BEVERAGE AIR	WTR27AHC-FLT-23	KES	KES	YES				
504	1EA	Reach-In Refrigerator	BEVERAGE AIR	HR1HC-1HS-18	KES	KES	YES				
507	1LOT	Heat Strip Package	HATCO	005-1600-00-507	KES	KES	YES				
518	1EA	Refrigerated Base	DELFIELD	DCHRB-45P	KES	KES	YES	YES			
519	1EA	Toaster	APW	M-95-2-CD-CHI	KES	KES	YES				
521	1EA	Tortilla Press	STAR	PST14T	KES	KES	YES				
522	1EA	Free Standing Ice Cream Cabinet	CUSTOM	KOF522A-01	KES	KES	YES				Indirect
522.1	1EA	Drop-In Ice Cream Freezer	GLASTENDER	DI-FR36	KES	KES	YES				
522.2	1EA	Dipwell Assembly	COMPONENT	K30-1010	KES	Plumber	YES			C	Indirect
522A	1EA	Flow Control & Strainer Assembly	BUNN-O-MATIC	22300.0175	KES	KES					
523	1EA	Soup Shelf Assembly	INTERMETRO	005-1600-00-523	KES	KES	YES				
524	1EA	Fry Holding	CARTER HOFFMAN	CNH28T	KES	KES	YES				
524A	1EA	Fry Holding Stand	CARTER HOFFMAN	CNH28T-STAND	KES	KES	YES				
528	2EA	2 Door Refrigerated Base	DELFIELD	DCH-SC-55RP	KES	KES	YES		Casters		
529	1EA	Drawer/Drawer Refrigerated Base	DELFIELD	DCH-EC-68DRWLP	KES	KES	YES		Casters		
529A	1EA	Door/Drawer Refrigerated Base	DELFIELD	DCH-EC-68DDCP	KES	KES	YES		Casters		
530	7EA	Portable Hot Food Well	APW	W-3Vi	Smallwares	Owner	YES				
532	5EA	Microwave Oven	SHARP	R-CD1200M	Smallwares	Owner	YES				
533	1LOT	Undercounter Shelving	INTERMETRO	005-1600-00-533	KES	KES	YES				
534A	5EA	Ticket Minder	H.A.SPARKE	QSR-4	KES	KES	YES				
550A	1EA	"Pre" Table	CUSTOM	005-1600-00-550A	KES	KES	YES				
550C	1EA	"Post" Table	CUSTOM	005-1600-00-550C	KES	KES	YES				
602	1EA	Frozen Drink Machine	FETCO	PEL0201	Owner	Owner	YES				
605	1EA	Wall Mounted Draft Beer Tower	MICROMATIC	CUSTOM	Owner	Owner	YES				Indirect
605A	1EA	Beer Tower Drip Tray	MICROMATIC	DP-820D-51	Owner	Owner	YES				Indirect
606	1EA	Glycol System	MICROMATIC	MMPP4301	Owner	Owner	YES				
606A	1EA	Beer System Gas Blender	MICROMATIC	MM200	Owner	Owner	YES				
611	1EA	Bar Gun	WUNDERBAR	M4-8600 RSFS	Owner	Owner	YES				
613	1EA	Glass Washer	ECOLAB	MODEL NUMBER	KES	KES	YES			H	Indirect
614A	1EA	Glass Rack Drainboard	CUSTOM	005-1600-00-614A	KES	KES	YES				Indirect
614B	1EA	Glass Rack Drainboard	CUSTOM	005-1600-00-614B	KES	KES	YES				Indirect
618A	1EA	Cocktail Station Ice Bin & Cold Plate	GLASTENDER	CBA-36L-CP10	KES	KES	YES				
618B	1EA	Blender Station	GLASTENDER	BSA-18R	KES	KES	YES				
622	1EA	Wall Shelf-Chiller	MICROMATIC	MMPPWS	KES	KES	YES				
628	6EA	Keg Dolly	BANNER	KS300	OWNER	OWNER			Casters		
631	1EA	Hand Sink Bar	GLASTENDER	DHSB-12MOD	KES	KES	YES			H/C	Indirect
632A	1EA	Back Bar Refigerator	MICROMATIC	MBB58-E	KES	KES	YES		4"Casters		
632B	1EA	Back Bar Refigerator	MICROMATIC	MBB58-E	KES	KES	YES		2" Casters		
633	1LOT	Beer Storage Unit	INTERMETRO	005-1600-00-633	KES	KES	YES		Fixed		
634	2EA	Trash/Recycle Cans	RUBBERMAID	SLIM JIM	Smallwares	Owner	YES		Casters		
635A	1EA	Storage Base/Cabinet	CUSTOM	005-1600-00-635A	KES	KES		YES			
635B	1EA	Storage Base/Cabinet	GLASTENDER	CUSTOM	KES	KES		YES			
641B	1EA	Large Bar Drain Pan	CUSTOM	005-1600-00-641B	KES	KES	YES				Indirect
649	1EA	Liquor Display	CUSTOM	005-1600-00-649	KES	KES	YES				
650	1EA	Lighted Liquor Display	GLASTENDER	-	KES	KES	YES				
700	1LOT	Aluminum Cove Base	NEW AGE	9787C (OR KOLPAK)	KES	KES		YES			
701	25EA	Corner Guards	CUSTOM	005-1600-00-701	KES	KES		YES			
701A	2EA	Kitchen Entrance S/S Casing	CUSTOM	005-1600-00-701A	KES	KES		YES			
701B	1EA	Walk-In Door Header S/S Casing	CUSTOM	005-1600-00-701B	KES	KES		YES			
701C	1EA	Storage Shed Entrance S/S Casing	CUSTOM	005-1600-00-701A	KES	KES		YES			
702	1EA	S/S Wall Panel Prep	CUSTOM	005-1600-00-702	KES	KES		YES			
703	1EA	Clean Dishtable	CUSTOM	005-1600-00-703	KES	KES		YES			
704	1EA	Beverage Table	CUSTOM	005-1600-00-704	KES	KES		YES			
710	1EA	Soiled Dishtable	CUSTOM	005-1600-00-710	KES	KES		YES			Indirect
741	1EA	Pant Leg Duct	CUSTOM	005-1600-00-741	KES	KES		YES			
743	1EA	Mop Sink Flashing	CUSTOM	005-1600-00-743	KES	KES		YES			
744	1EA	Microwave Shelf	CUSTOM	005-1600-00-744	KES	KES		YES			
748	1EA	Garbage Bag Holder	CUSTOM	005-1600-00-748	KES	KES		YES			
749	1EA	Table Set Shelf	CUSTOM	005-1600-00-749	KES	KES		YES			
754	1EA	Wing Sauce Rack	CUSTOM	005-1600-00-754	KES	KES		YES			
752	1EA	Zone 3 Work Table	CUSTOM	005-1600-00-752	KES	KES		YES			
765	1EA	Upper Pass Shelf	CUSTOM	005-1600-00-765	KES	KES		YES			
765.1	1EA	S/S Trim	CUSTOM	005-1600-00-765.1	KES	KES		YES			
766	1EA	Lower Pass Shelf	CUSTOM	005-1600-00-766	KES	KES		YES			
767	14EA	Onion/Bacon Holder	CUSTOM	005-1600-00-767	KES	KES		YES			
771	1EA	POS Table	CUSTOM	005-1600-00-771	KES	KES		YES			
791A	2EA	Hanging Rack	CUSTOM	005-1600-00-791A	KES	KES		YES			
791B	2EA	Ladder Hanging Bracket	CUSTOM	005-1600-00-791B	KES	KES		YES			
792	1EA	3 Compartment Sink	CUSTOM	005-1600-00-792	KES	KES		YES			Indirect
794	1EA	S/S Wall Panel-Fryer	CUSTOM	005-1600-00-794	KES	KES		YES			
794A	1EA	S/S Wall Panel-Cookline	CUSTOM	005-1600-00-794A	KES	KES		YES			
797	1EA	S/S Wall Panel-Dishroom	CUSTOM	005-1600-00-797	KES	KES		YES			
798	1EA	Wall Shelf	CUSTOM	005-1600-00-798	KES	KES		YES			
798A	1EA	Wall Shelf	CUSTOM	005-1600-00-798A	KES	KES		YES			
798B	1EA	S/S Wall Shelf	CUSTOM	005-1600-00-798B	KES	KES		YES			
800	1EA	Pick-Up Counter	CUSTOM	005-1600-00-800	KES	KES		YES			
801	1EA	Soup Station	CUSTOM	005-1600-00-801	KES	KES	YES	YES			
803A	1EA	Toaster Station	CUSTOM	005-1600-00-803A	KES	KES		YES			
856	3EA	S/S Angle Trim (Hoods #112, #228, #229)	CUSTOM	005-1600-00-856	KES	KES		YES			
857	1EA	Ice Slide	CUSTOM	005-1700-00-857	KES	KES		YES			
856.1	3EA	S/S Vertical Hood Trim	CUSTOM	005-1600-00-856.1	KES	KES		YES			
881A	6EA	KDS Bracket	CUSTOM	005-1600-00-881A	KES	KES		YES			
881B	1EA	Wall Mounting KDS Bracket	CUSTOM	005-1600-00-881B	KES	KES		YES			
881C	3EA	Wall Mounting KDS Bracket	CUSTOM	005-1600-00-881C	KES	KES		YES			

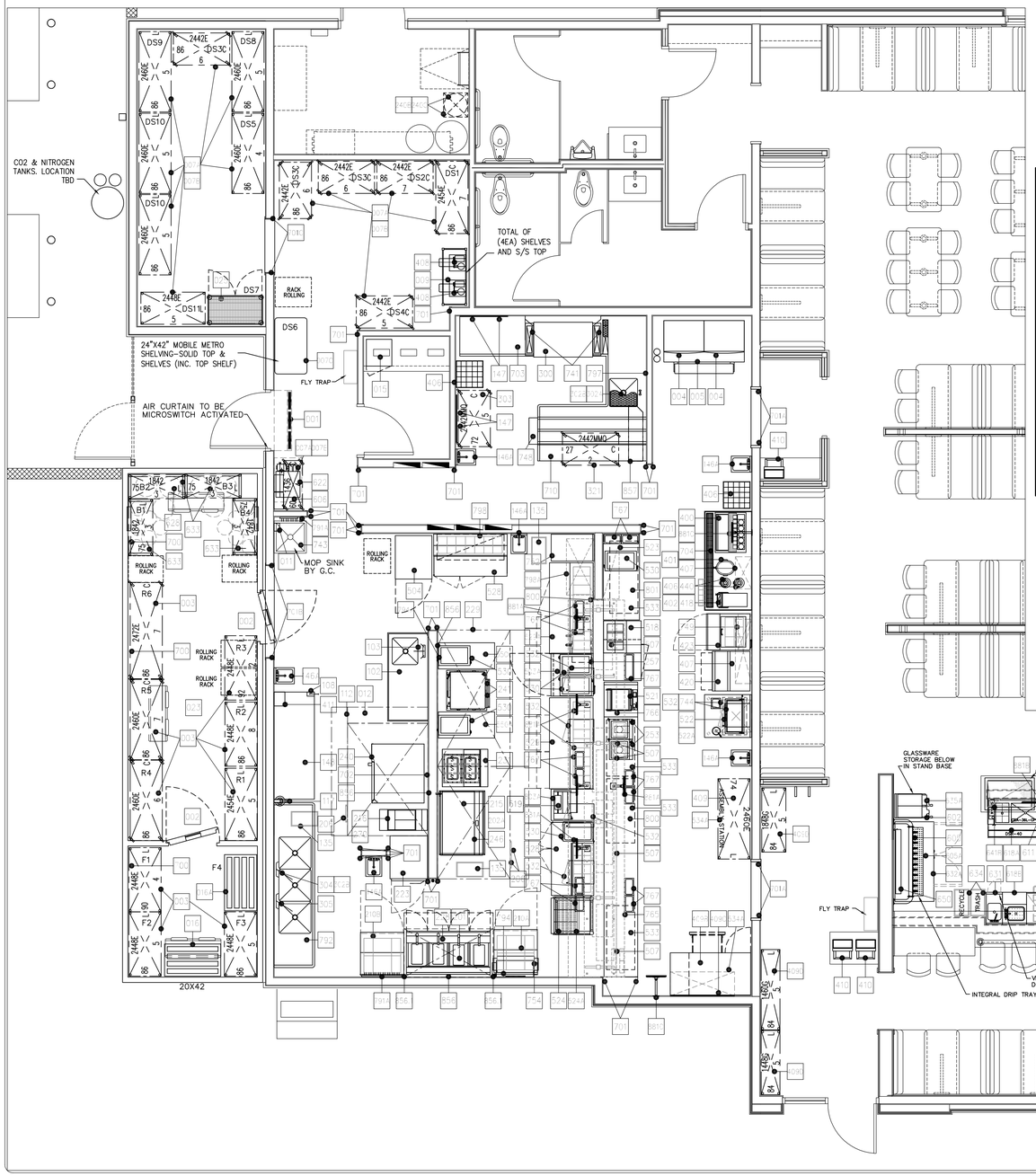

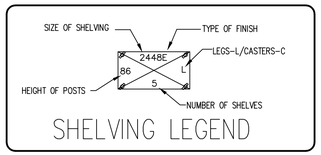

SHELVING LEGEND

GENERAL FOODSERVICE HEALTH DEPARTMENT NOTES

01. ALL NEW EXHAUST HOODS WILL BE CONSTRUCTED TO MEET THE FOLLOWING STANDARDS, "NSF, UL, AND NFPA-96". ALL NEW HOODS TO BEAR UL CLASSIFIED LABEL WITHOUT DAMPERS IN EXHAUST VENT COLLARS. HOODS ARE DESIGNED TO MEET OR EXCEED 50 FPM CAPTURE VELOCITY AT THE COOKING SURFACE EDGE AND HAVE 6" MINIMUM OVERHANG AT ALL EXPOSED COOKING AREAS.

02. ALL COOKING EQUIPMENT UNDER EXHAUST HOODS ARE EITHER ON CASTERS WITH FLEXIBLE UTILITY QUICK DISCONNECTS OR FIXED ON STAINLESS STEEL LEGS AND SEALED TO WALLS WITH CLEAR SILICONE SEALANT.

03. DISHWASHER WILL BE DESIGNED AS LOW TEMPERATURE (140 F. DEGREES).

04. THE HOODS AND EXHAUST DUCT SYSTEMS WILL BE PROVIDED WITH AN AUTOMATIC FIRE EXTINGUISHING SYSTEM.

05. ALL REFRIGERATION EQUIPMENT SHALL HAVE THERMOMETERS WHICH ARE EASILY READABLE, IN PROPER WORKING CONDITION AND ACCURATE WITHIN A RANGE OF PLUS OR MINUS TWO (2) DEGREES.

06. COUNTER TOP EQUIPMENT NOT READILY MOVABLE, WEIGHING OVER 80 POUNDS, WILL BE PROVIDED WITH LEGS OR FEET AT LEAST FOUR (4") INCHES HIGH.

07. ALL CHEMICAL INJECTION SYSTEMS MUST BE INSTALLED DOWNSTREAM FROM A VACUUM BREAKER OR AIR GAP, TO PREVENT POSSIBLE BACK SIHPONAGE TO THE CHEMICALS INTO THE WATER LINE SYSTEM.

08. ALL CUTTING BOARDS AND WORK SURFACES SHALL BE OF NON-WOOD CONSTRUCTION.

09. AN AISLE SPACE OF THIRTY (30") INCHES OR MORE SHALL BE PROVIDED WITHIN ALL WORK AND STORAGE AREAS.

10. BACKSPLASHES OF EQUIPMENT SHALL BE SEALED TO WALLS WITH CLEAR SILICONE.

11. VACUUM BREAKERS, WHEN USED, TO BE MINIMUM OF SIX (6") INCHES ABOVE THE FLOOD LEVEL RIM WITH NO SHUT OFF DEVICES BEYOND THE DISCHARGE OF THE VACUUM BREAKER.

12. A MINIMUM OF 50 FOOT CANDLES OF LIGHTING IS PROVIDED IN ALL FOOD PREPARATION AREAS, AND WALK-IN BOXES. LIGHTING TO BE SHIELDED OVER EXPOSED FOOD AND UTENSIL AREAS. A MINIMUM OF 35 FOOT CANDLES OF LIGHTING OVER FOOD SERVING AREAS.

13. ALL OPENINGS IN CONSTRUCTION WILL BE SEALED TO WITHIN 1/32 OF AN INCH.

14. THE USE OF SEALANTS MUST BE LISTED AS APPROVED BY THE NATIONAL SANITATION FOUNDATION (NSF) UNDER STANDARD C-2.

15. SEALANTS MAY BE USED ONLY IN STRUCTURALLY SOUND JOINTS AND SEAMS. SEALANTS MAY NOT BE UTILIZED IN FOOD AND SPLASH CONTACT SURFACES TO FILL OPEN SPACES OR VOIDS WHICH RESULT DUE TO IMPROPER FABRICATION. ANY OPENING IN EXCESS OF 1/8 INCH SHALL BE CONSIDERED EXCESSIVE AND MUST BE CLOSED USING PROPER FIELD JOINT.

16. OPENINGS AROUND SERVICE AND UTILITY LINES SHOULD BE CLOSED AS FAR AS POSSIBLE WITH COLLARS, GROMMETS AND FLEXIBLE FORM GASKETS. SEALANTS MAY NOT BE USED TO SEAL SERVICE AND UTILITY LINES TO WALLS OR ADJACENT PIECES OF EQUIPMENT.

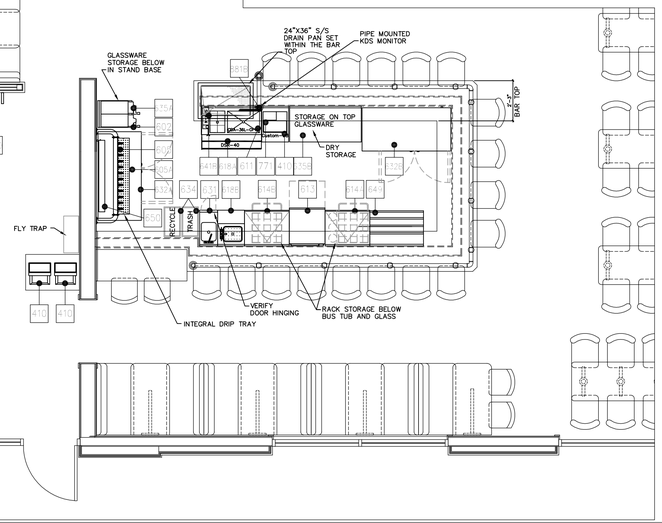

REVISIONS	BY

BRINKER INTERNATIONAL * 3000 OLYMPUS BOULEVARD * DALLAS, TEXAS 75019* (972)980-9917

chili's

BRINKER INTERNATIONAL

CL #	DATE IMPLEMENTED

CHILI'S
PROTO 18.5 FLIP STRETCH
EQUIPMENT PLAN AND SCHEDULE

DATE: 03/06/24
SCALE: 1/4" = 1'-0"
DRAWN: CR
CAD FILE:

FOOD SERVICE PLAN

SHEET
K101

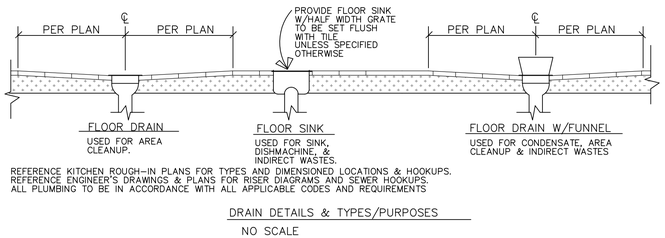

REFERENCE KITCHEN ROUGH-IN PLANS FOR TYPES AND DIMENSIONED LOCATIONS & HOOKUPS.
REFERENCE ENGINEER'S DRAWINGS & PLANS FOR RISER DIAGRAMS AND SEWER HOOKUPS.
ALL PLUMBING TO BE IN ACCORDANCE WITH ALL APPLICABLE CODES AND REQUIREMENTS

DRAIN DETAILS & TYPES/PURPOSES

NO SCALE

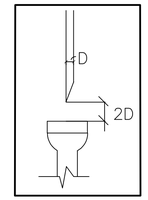

INDIRECT WASTE AIR GAP DETAIL

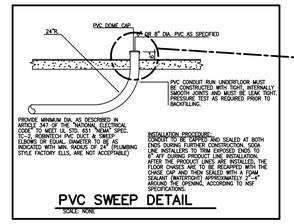

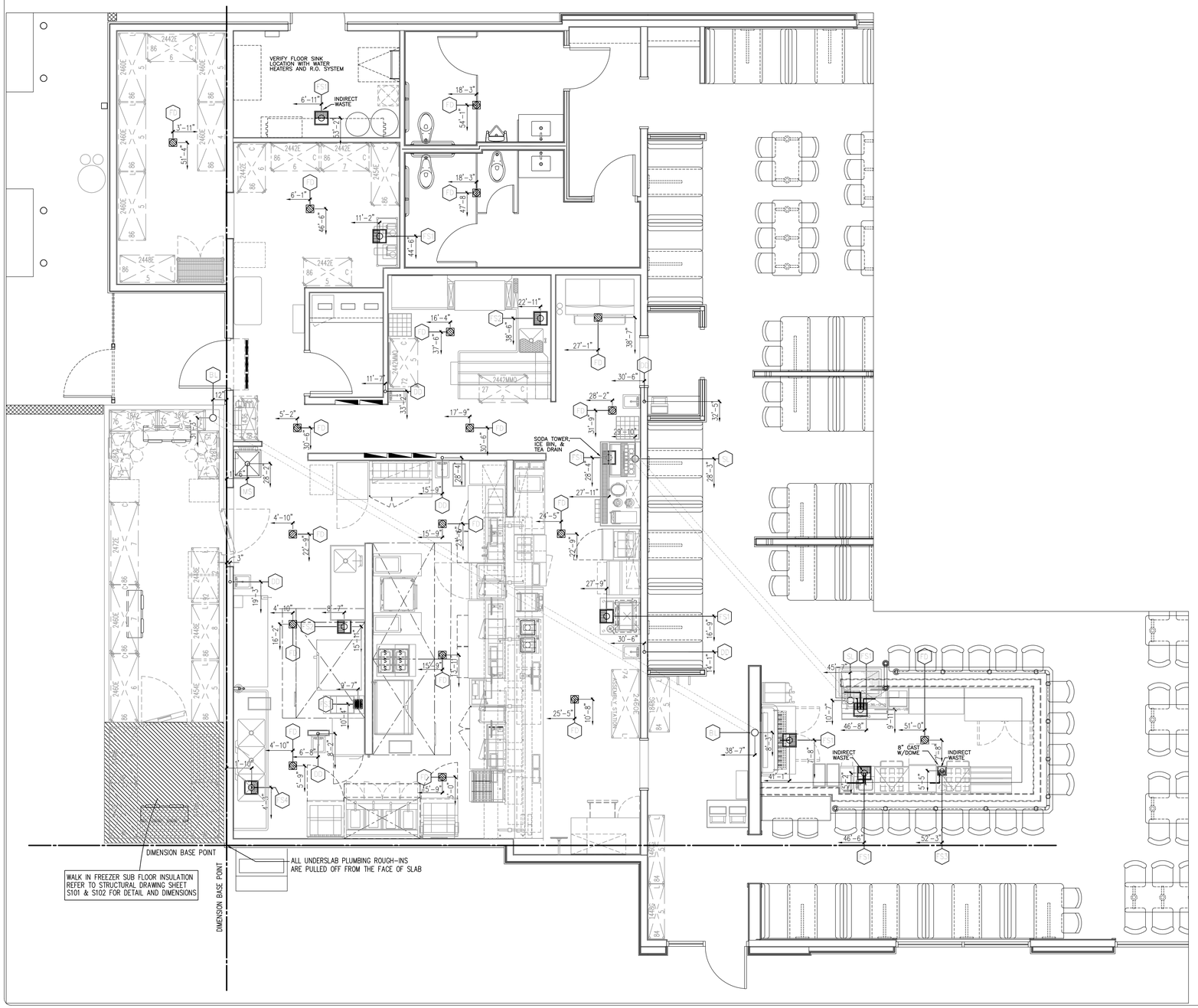

GENERAL NOTES

1. ALL NEW EXHAUST HOODS WILL BE CONSTRUCTED TO MEET THE FOLLOWING STANDARDS, "NSF, UL, AND NFPA-96". ALL NEW HOODS TO BEAR UL CLASSIFIED LABEL WITHOUT DAMPERS IN EXHAUST VENT COLLARS. HOODS ARE DESIGNED TO MEET OR EXCEED 50 FPM CAPTURE VELOCITY AT THE COOKING SURFACE EDGE AND HAVE 1'-0" MINIMUM OVERHANG AT ALL EXPOSED COOKING AREAS.
2. ALL COOKING EQUIPMENT UNDER EXHAUST HOODS ARE EITHER ON CASTERS WITH FLEXIBLE UTILITY QUICK DISCONNECTS OR FIXED ON STAINLESS STEEL LEGS AND SEALED TO WALLS WITH CLEAR SILICONE SEALANT.
3. DISHWASHERS WILL BE DESIGNED AS LOW TEMPERATURE WASH SYSTEM.
4. THE HOODS AND EXHAUST DUCT SYSTEMS BY G.C. SHALL BE PROVIDED WITH AN AUTOMATIC FIRE EXTINGUISHING SYSTEM.
5 SHUT-OFF VALVES, REQUIRED AS PART OF THE FIRE SUPPRESSION SYSTEM FOR GAS AND/OR ELECTRIC COOKING EQUIPMENT, UNDER OR ADJACENT TO HOODS, SHOULD BE PROVIDED BY G.C. AS REQUIRED PER GOVERNING JURISDICTION AND LOCAL AND/OR STATE CODES.
6. ALL REFRIGERATION EQUIPMENT SHALL HAVE THERMOMETERS WHICH ARE EASILY READABLE, IN PROPER WORKING CONDITION AND ACCURATE, WITHIN A RANGE OF PLUS OR MINUS TWO (2) DEGREES.
7. COUNTER TOP EQUIPMENT NOT READILY MOVABLE, WEIGHING OVER 80 POUNDS, WILL BE PROVIDED WITH LEGS OR FEET AT LEAST FOUR (4") INCHES HIGH.
8. ALL CHEMICAL INJECTION SYSTEMS MUST BE INSTALLED DOWNSTREAM FROM A VACUUM BREAKER OR AIR GAP, TO PREVENT POSSIBLE BACK SIPHONAGE TO THE CHEMICALS INTO THE WATER LINE SYSTEM.
9. ALL CUTTING BOARDS AND WORK SURFACES SHALL BE OF NON-WOOD CONSTRUCTION.
10. AN AISLE SPACE OF THIRTY (30") INCHES OR MORE SHALL BE PROVIDED WITHIN ALL WORK AND STORAGE AREAS.
11. BACKSPLASHES OF EQUIPMENT SHALL BE SEALED TO WALLS WITH CLEAR SILICONE.
12. VACUUM BREAKERS, WHEN USED, TO BE MINIMUM OF SIX (6") INCHES ABOVE THE FLOOD LEVEL RIM WITH NO SHUT OFF DEVICES BEYOND THE DISCHARGE OF THE VACUUM BREAKER.
13. PROVIDE A MINIMUM OF 50 FOOT CANDLES OF LIGHTING IN ALL FOOD PREPARATION, COOKING AND DISHWASHING AREAS. LIGHTING IS TO BE SHIELDED OVER EXPOSED FOOD AND UTENSIL AREAS. PROVIDE A MINIMUM OF 50 FOOT CANDLES OF LIGHTING OVER FOOD SERVING AND PICKUP AREAS.
14. HANDWASHING FACILITIES ARE REQUIRED FOR FOOD PREPARATION, SERVING AND/OR UTENSIL WASHING AREAS AND WILL BE SHOWN ON THE KITCHEN EQUIPMENT FLOOR PLAN.
15. ALL OPENINGS IN CONSTRUCTION WILL BE SEALED TO WITHIN 1/32 OF AN INCH.
16. THE USE OF SEALANTS MUST BE LISTED AS APPROVED BY THE NATIONAL SANITATION FOUNDATION (NSF) UNDER STANDARD C-2.
17. SEALANTS MAY BE USED ONLY IN STRUCTURALLY SOUND JOINTS AND SEAMS. SEALANTS MAY NOT BE UTILIZED IN FOOD AND SPLASH CONTACT SURFACES, TO FILL OPEN SPACES OR VOIDS WHICH RESULT DUE TO IMPROPER FABRICATION. ANY OPENING IN EXCESS OF 1/8 INCH SHALL BE CONSIDERED EXCESSIVE AND MUST BE CLOSED USING PROPER FIELD JOINT.
18. OPENINGS AROUND SERVICE AND UTILITY LINES SHOULD BE CLOSED AS FAR AS POSSIBLE WITH COLLARS, GROMMETS AND FLEXIBLE FORM GASKETS. SEALANTS MAY NOT BE USED TO SEAL SERVICE AND UTILITY LINES TO WALLS OR ADJACENT PIECES OF EQUIPMENT.

SYMBOL LEGEND

- .....FLOOR SINK (FS)
- .....FLOOR DRAIN (FD)
- .....FLOOR DRAIN W/4" HIGH FUNNEL
- .....FLOOR DRAIN W/8" HIGH FUNNEL
- ....INDIRECT DRAIN LINE AS REQUIRED
- ....SINGLE WATER FEED AS SPECIFIED
- ....HOT & COLD WATER W/ 1 1/2" DRAIN
- ....HOT & COLD WATER ONLY
- .....GAS FEEDER (DOWN FROM ABOVE)
- .....GAS SHUTOFF VALVE
- DR ....DRAIN
- HD .....HUB DRAIN
- CW ....COLD WATER
- HW ....HOT WATER
- HGT....ELEVATION
- AFF ...ABOVE FINISHED FLOOR
- BFF ...BELOW FINISHED FLOOR
- SU ....STUB UP ABOVE FINISHED FLOOR
- DFA ..DOWN FROM ABOVE
- BTC ..BRANCH TO CONNECTION
- GPM .GALLONS PER MINUTE
- GPH .GALLONS PER HOUR
- PSI ...POUNDS PER SQUARE INCH
- P.C. ...PLUMBING CONTRACTOR
- KES ...KITCHEN EQUIPMENT SUPPLIER

PLUMBING ROUGH-IN NOTES

VOLT PHASE TYPE PRV CONNECTED TO MAX. TEMP. GENERAL

A. ALL PLUMBING OUTLETS AND REQUIREMENTS SHOWN ON THIS PLAN ARE FOR FIXTURES AND EQUIPMENT FURNISHED BY THE KES, UNLESS OTHERWISE NOTED. FOR ANY ADDITIONAL BUILDING PLUMBING REQUIREMENTS SEE OTHER PLUMBING PLANS.

B. PLUMBING SHOULD NOT INTERFERE WITH OPERATION OR FUNCTION OF EQUIPMENT. SECURE TO EQUIPMENT AND WALLS AS REQUIRED. ALL ROUGH-INS SHOWN ARE TO BE RUN INSIDE WALLS, (EXCEPT STUB-UPS). LOCATIONS INDICATE POINT OF EXIT FROM WALLS, CEILING.

C. RUN CONDENSATE LINES FROM UNITS TO DRAINS AS SHOWN. THIS LINE SHALL BE NO SMALLER THAN THE STUB OUT OF THE FIXTURE. FOR SPECIFIC TYPE OF CONNECTION AND LOCATIONS REFER TO THE KITCHEN EQUIPMENT BROCHURES AND DRAWINGS.

D. PLUMBER TO PROVIDE SHUT OFF VALVES ON ALL WATER AND GAS LINES, ALL VALVES, CUT OFFS, TRAPS, HYDROSTATIC SHOCK ELIMINATORS, PRESSURE REGULATORS AND MATERIAL NECESSARY TO CONNECT ALL LINES, UNLESS OTHERWISE SPECIFIED ON THE ITEM SPECIFICATIONS.

E. ALL FLOOR DRAINS ARE TO BE SET 1/2" BELOW FINISHED FLOOR UNLESS OTHERWISE NOTED. DO NOT SLOPE FLOORS SO CLOSE TO DRAINS AS TO CREATE "PITS" OR "DIPS" IN FLOOR.

F. IF ELECTROLYSIS CONDITIONS EXIST, A DIELECTRIC COUPLING SHOULD BE USED IN FINAL PLUMBING CONNECTION .

G. KES TO PROVIDE ALL FAUCETS, DRAIN OUTLET FITTINGS IN FIXTURES AND SPECIALTY ITEMS AS OUTLINED IN THE ITEM AND GENERAL PRODUCT SPECIFICATIONS.

H. ALL WORK RELATING TO THE INSTALLATION & HOOKUP OF THE SPECIFIED EQUIPMENT IS TO BE PERFORMED IN FULL ACCORDANCE WITH ALL AUTHORITY HAVING JURISDICTION.

I. WALL PENETRATIONS FOR DRAIN LINES REQUIRE ESCUTCHEON PLATES.

J. ALL EQUIPMENT DRAINS WILL BE COPPER, EXCEPT THOSE DRAIN LINES THAT DRAIN SODA MACHINE SPILL TROUGHS. THOSE DRAINS TO BE SCH 40 PVC.

UNDERSLAB CONNECTIONS

SYM	SIZE	HGT	PLUMBING TYPE	CONNECTED TO:	SPECIFIC REQUIREMENT
BL	6"	6"	PVC	FOR BEER LINE RUN	SEE DETAIL THIS SHEET
SL	6"	6"	PVC	FOR SODA LINE RUN	SEE DETAIL THIS SHEET

DRAINLINE CONNECTIONS

SYM	SIZE	HGT	PLUMBING TYPE	CONNECTED TO:	SPECIFIC REQUIREMENT
FD	3"		FLOOR DRAIN	AREA CLEANUP	SEE DETAIL THIS SHEET
FS1	3"		FLOOR SINK 12X12 SQUARE	INDIRECT DRAIN	PVC FLOOR SINK
FS2	3"		FLOOR SINK 12X12 SQUARE	INDIRECT DRAIN	CAST IRON FLOOR SINK
FS3	3"		FLOOR SINK 8X8 SQUARE	INDIRECT DRAIN	CAST IRON FLOOR SINK
FS4	4"		FLOOR SINK 12X12 SQUARE	INDIRECT DRAIN	PVC FLOOR SINK
DD	2"	16"	DIRECT DRAIN	DIRECT DRAIN	SEE DETAIL THIS SHEET
MS	3"	BFF	DIRECT DRAIN	MOP SINK	BY G.C.

KITCHEN EQUIPMENT PLUMBING PLAN UNDERSLAB

REVISIONS	BY

BRINKER INTERNATIONAL * 3000 OLYMPUS BOULEVARD * DALLAS, TEXAS 75019* (972)980-9917

chili's

BRINKER INTERNATIONAL

CL #	DATE IMPLEMENTED

CHILI'S
PROTO 18.5 FLIP STRETCH
BELOW SLAB PLUMBING PLAN

DATE: 03/06/24
SCALE: 1/4" = 1'-0"
DRAWN: CR
CAD FILE:

FOOD SERVICE
PLUMBING
UNDERSLAB

SHEET
K201

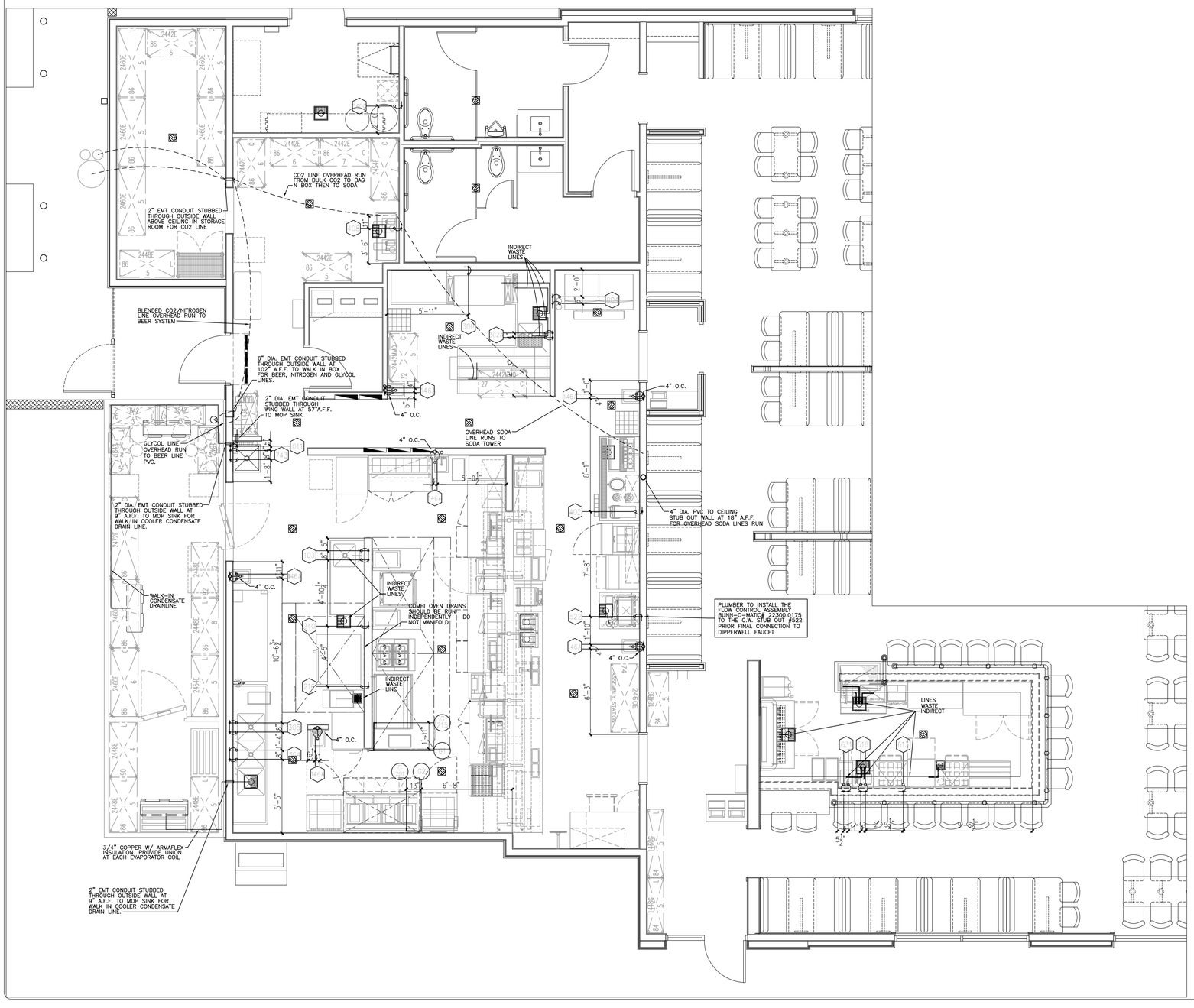

GENERAL NOTES

1. ALL NEW EXHAUST HOODS WILL BE CONSTRUCTED TO MEET THE FOLLOWING STANDARDS, "NSF, UL, AND NFPA-96". ALL NEW HOODS TO BEAR UL CLASSIFIED LABEL WITHOUT DAMPERS IN EXHAUST VENT COLLARS. HOODS ARE DESIGNED TO MEET OR EXCEED 50 FPM CAPTURE VELOCITY AT THE COOKING SURFACE EDGE AND HAVE 1'-0" MINIMUM OVERHANG AT ALL EXPOSED COOKING AREAS.
2. ALL COOKING EQUIPMENT UNDER EXHAUST HOODS ARE EITHER ON CASTERS WITH FLEXIBLE UTILITY QUICK DISCONNECTS OR FIXED ON STAINLESS STEEL LEGS AND SEALED TO WALLS WITH CLEAR SILICONE SEALANT.
3. DISHWASHERS WILL BE DESIGNED AS LOW TEMPERATURE WASH SYSTEM.
4. THE HOODS AND EXHAUST DUCT SYSTEMS BY G.C. SHALL BE PROVIDED WITH AN AUTOMATIC FIRE EXTINGUISHING SYSTEM.
5. SHUT-OFF VALVES, REQUIRED AS PART OF THE FIRE SUPPRESSION SYSTEM FOR GAS AND/OR ELECTRIC COOKING EQUIPMENT, UNDER OR ADJACENT TO HOODS, SHOULD BE PROVIDED BY G.C. AS REQUIRED PER GOVERNING JURISDICTION AND LOCAL AND/OR STATE CODES.
6. ALL REFRIGERATION EQUIPMENT SHALL HAVE THERMOMETERS WHICH ARE EASILY READABLE, IN PROPER WORKING CONDITION AND ACCURATE, WITHIN A RANGE OF PLUS OR MINUS TWO (2) DEGREES.
7. COUNTER TOP EQUIPMENT NOT READILY MOVABLE, WEIGHING OVER 80 POUNDS, WILL BE PROVIDED WITH LEGS OR FEET AT LEAST FOUR (4") INCHES HIGH.
8. ALL CHEMICAL INJECTION SYSTEMS MUST BE INSTALLED DOWNSTREAM FROM A VACUUM BREAKER OR AIR GAP, TO PREVENT POSSIBLE BACK SIPHONAGE TO THE CHEMICALS INTO THE WATER LINE SYSTEM.
9. ALL CUTTING BOARDS AND WORK SURFACES SHALL BE OF NON-WOOD CONSTRUCTION.
10. AN AISLE SPACE OF THIRTY (30") INCHES OR MORE SHALL BE PROVIDED WITHIN ALL WORK AND STORAGE AREAS.
11. BACKSPLASHES OF EQUIPMENT SHALL BE SEALED TO WALLS WITH CLEAR SILICONE.
12. VACUUM BREAKERS, WHEN USED, TO BE MINIMUM OF SIX (6") INCHES ABOVE THE FLOOD LEVEL RIM WITH NO SHUT OFF DEVICES BEYOND THE DISCHARGE OF THE VACUUM BREAKER.
13. PROVIDE A MINIMUM OF 50 FOOT CANDLES OF LIGHTING IN ALL FOOD PREPARATION, COOKING AND DISHWASHING AREAS. LIGHTING IS TO BE SHIELDED OVER EXPOSED FOOD AND UTENSIL AREAS. PROVIDE A MINIMUM OF 50 FOOT CANDLES OF LIGHTING OVER FOOD SERVING AND PICKUP AREAS.
14. HANDWASHING FACILITIES ARE REQUIRED FOR FOOD PREPARATION, SERVING AND/OR UTENSIL WASHING AREAS AND WILL BE SHOWN ON THE KITCHEN EQUIPMENT FLOOR PLAN.
15. ALL OPENINGS IN CONSTRUCTION WILL BE SEALED TO WITHIN 1/32 OF AN INCH.
16. THE USE OF SEALANTS MUST BE LISTED AS APPROVED BY THE NATIONAL SANITATION FOUNDATION (NSF) UNDER STANDARD C-2.
17. SEALANTS MAY BE USED ONLY IN STRUCTURALLY SOUND JOINTS AND SEAMS. SEALANTS MAY NOT BE UTILIZED IN FOOD AND SPLASH CONTACT SURFACES, TO FILL OPEN SPACES OR VOIDS WHICH RESULT DUE TO IMPROPER FABRICATION. ANY OPENING IN EXCESS OF 1/8 INCH SHALL BE CONSIDERED EXCESSIVE AND MUST BE CLOSED USING PROPER FIELD JOINT.
18. OPENINGS AROUND SERVICE AND UTILITY LINES SHOULD BE CLOSED AS FAR AS POSSIBLE WITH COLLARS, GROMMETS AND FLEXIBLE FORM GASKETS. SEALANTS MAY NOT BE USED TO SEAL SERVICE AND UTILITY LINES TO WALLS OR ADJACENT PIECES OF EQUIPMENT.

SYMBOL LEGEND

- .....FLOOR SINK (FS)
- .....FLOOR DRAIN (FD)
- .....FLOOR DRAIN W/4" HIGH FUNNEL
- .....FLOOR DRAIN W/8" HIGH FUNNEL
- ....INDIRECT DRAIN LINE AS REQUIRED
- .....SINGLE WATER FEED AS SPECIFIED
- ...HOT & COLD WATER W/ 1 1/2" DRAIN
- ...HOT & COLD WATER ONLY
- .....GAS FEEDER (DOWN FROM ABOVE)
- .....GAS SHUTOFF VALVE
- DR ....DRAIN
- HD .....HUB DRAIN
- CW ....COLD WATER
- HW ....HOT WATER
- HGT....ELEVATION
- AFF ...ABOVE FINISHED FLOOR
- BFF ...BELOW FINISHED FLOOR
- SU ....STUB UP ABOVE FINISHED FLOOR
- DFA ..DOWN FROM ABOVE
- BTC ..BRANCH TO CONNECTION
- GPM .GALLONS PER MINUTE
- GPH .GALLONS PER HOUR
- PSI ...POUNDS PER SQUARE INCH
- P.C. ...PLUMBING CONTRACTOR
- KES ...KITCHEN EQUIPMENT SUPPLIER

VOLT PHASE TYPE EQUIP CONNECTED TO MAX AMPS GENERAL

PLUMBING ROUGH-IN NOTES

A. ALL PLUMBING OUTLETS AND REQUIREMENTS SHOWN ON THIS PLAN ARE FOR FIXTURES AND EQUIPMENT FURNISHED BY THE KES, UNLESS OTHERWISE NOTED. FOR ANY ADDITIONAL BUILDING PLUMBING REQUIREMENTS SEE OTHER PLUMBING PLANS.

B. PLUMBING SHOULD NOT INTERFERE WITH OPERATION OR FUNCTION OF EQUIPMENT. SECURE TO EQUIPMENT AND WALLS AS REQUIRED. ALL ROUGH-INS SHOWN ARE TO BE RUN INSIDE WALLS, (EXCEPT STUB-UPS). LOCATIONS INDICATE POINT OF EXIT FROM WALLS, CEILING.

C. RUN CONDENSATE LINES FROM UNITS TO DRAINS AS SHOWN. THIS LINE SHALL BE NO SMALLER THAN THE STUB OUT OF THE FIXTURE. FOR SPECIFIC TYPE OF CONNECTION AND LOCATIONS REFER TO THE KITCHEN EQUIPMENT BROCHURES AND DRAWINGS.

D. PLUMBER TO PROVIDE SHUT OFF VALVES ON ALL WATER AND GAS LINES, ALL VALVES, CUT OFFS, TRAPS, HYDROSTATIC SHOCK ELIMINATORS, PRESSURE REGULATORS AND MATERIAL NECESSARY TO CONNECT ALL LINES, UNLESS OTHERWISE SPECIFIED ON THE ITEM SPECIFICATIONS.

E. ALL FLOOR DRAINS ARE TO BE SET 1/2" BELOW FINISHED FLOOR UNLESS OTHERWISE NOTED. DO NOT SLOPE FLOORS SO CLOSE TO DRAINS AS TO CREATE "PITS" OR "DIPS" IN FLOOR.

F. IF ELECTROLYSIS CONDITIONS EXIST, A DIELECTRIC COUPLING SHOULD BE USED IN FINAL PLUMBING CONNECTION .

G. KES TO PROVIDE ALL FAUCETS, DRAIN OUTLET FITTINGS IN FIXTURES AND SPECIALTY ITEMS AS OUTLINED IN THE ITEM AND GENERAL PRODUCT SPECIFICATIONS.

H. ALL WORK RELATING TO THE INSTALLATION & HOOKUP OF THE SPECIFIED EQUIPMENT IS TO BE PERFORMED IN FULL ACCORDANCE WITH ALL AUTHORITY HAVING JURISDICTION.

I. WALL PENETRATIONS FOR DRAIN LINES REQUIRE ESCUTCHEON PLATES.

J. ALL EQUIPMENT DRAINS WILL BE COPPER, EXCEPT THOSE DRAIN LINES THAT DRAIN SODA MACHINE SPILL TROUGHS. THOSE DRAINS TO BE SCH 40 PVC.

PLUMBING CONNECTION REQUIREMENTS

SYM	SIZE	HGT	PLUMBING TYPE	CONNECTED TO:	SPECIFIC REQUIREMENT
004	3/4"	96"	COLD WATER	ICE MACHINE THRU FILTER	PROVIDE CUTOFF
011	3/4"	84"	COLD WATER STUB OUT	ECOLAB HOSE BIBB	PROVIDE CUTOFF
103	1/2"	14"	HOT & COLD WATER	WORK SINK	
146A	1/2"	18"	HOT & COLD WATER	HAND SINK FAUCET	
216	1/2"	30"	HOT WATER	RETHERMALIZER	
240	3/4"	24"	COLD WATER	COMBI OVEN	TEE TO 2 (3/4") GARDEN HOSE CONN'S.
240C	1/2"	24"	COLD WATER	COMBI RO SYSTEM	PROVIDE CUT OFF VALVE W/ 1/2" FPT
300	3/4"	66"	HOT WATER 140°F	DISHMACHINE FILL	
302A	1/2"	18"	HOT & COLD WATER	PRE-RINSE SPRAYER	
304/305	1/2"	12"	HOT & COLD WATER	3 COMPARTMENT SINK	(2)FAUCET LOCATIONS
402	3/8"	48"	COLD WATER	COMBINATION COFFEE & TEA	PROVIDE CUTOFF W/3/8" COMP. FITTINGS
408	1/2"	96"	COLD WATER	CARBONATORS	PROVIDE CUTOFF
522	1/2"	24"	COLD WATER	DIPPERWELL	B.T.C. TO FLOW CONTROL ASSEMBLY.
613	1/2"	12"	HOT WATER	GLASS WASHER	140° INCOMING PROVIDE CUTOFF (3/4" HOSE)
618	1/2"	12"	HOT & COLD WATER	COCKTAIL STATION	PROVIDE CUTOFF
631	1/2"	12"	HOT & COLD WATER	BAR HAND SINK	
743	1/2"	44"	HOT & COLD WATER	MOP SINK FAUCET	WALL MOUNT

GAS LINE 'G1' CONNECTION REQUIREMENTS

SYM	SIZE	PLUMBING TYPE	CONNECTED TO:	MBTU	SPECIFIC REQUIREMENT
G1	1-1/4"	NAT. GAS FEEDER	MAIN	209	
215	3/4"	GAS BALL VALVE	GRIDDLE	120	

STUB-OUTS TO BE 36" A.F.F. PLUMBER WILL ALSO NEED TO INSTALL ALL GAS PRESSURE REGULATORS SUPPLIED WITH THE EQUIPMENT.

TOTAL NAT GAS REQUIREMENTS 209 MBTU (209,000 BTU'S)

GAS LINE 'G2' CONNECTION REQUIREMENTS

SYM	SIZE	PLUMBING TYPE	CONNECTED TO:	MBTU	SPECIFIC REQUIREMENT
G1	1-1/4"	NAT. GAS FEEDER	MAIN	300	
201	1"	GAS BALL VALVE	FRYERS-4	300	

STUB-OUTS TO BE 30" A.F.F. PLUMBER WILL ALSO NEED TO INSTALL ALL GAS PRESSURE REGULATORS SUPPLIED WITH THE EQUIPMENT.

TOTAL NAT GAS REQUIREMENTS 300 MBTU (300,000 BTU'S)

NOTE:
1. AT MAIN COOKLINE: GAS LINE TO RUN VERTICALLY NEXT TO THE HOODS ON OUTSIDE OF WALL DOWN TO 36" A.F.F. AND CAP.
2. AT FRYER BATTERY:: GAS LINE TO RUN VERTICALLY NEXT TO THE HOODS ON OUTSIDE OF WALL DOWN TO 30" A.F.F., THEN TURN HORIZONTAL.

KITCHEN EQUIPMENT PLUMBING PLAN ABOVE SLAB

REVISIONS	BY

BRINKER INTERNATIONAL * 3000 OLYMPUS BOULEVARD * DALLAS, TEXAS 75019* (972)980-9917

chili's

BRINKER INTERNATIONAL

CL #	DATE IMPLEMENTED

CHILI'S
PROTO 18.5 FLIP STRETCH
ABOVE SLAB PLUMBING PLAN

DATE: 03/06/24
SCALE: 1/4" = 1'-0"
DRAWN: CR
CAD FILE:

FOOD SERVICE
PLUMBING
ABOVE SLAB

SHEET
K211

NOTE:

ALL EQUIPMENT LISTED UNDER ITEMS 800A AND 800B ARE TO BE PRE-WIRED (NIC) PROVIDED BY KES.

WALK-IN NOTES

A. ELECTRICIAN TO SET DISCONNECTS, ONE PER CONDENSING UNIT.

B. ELECTRICIAN TO PULL WIRES TO EVAPORATOR, 110/60/1, 20A TO PANEL.

C. ELECTRICIAN TO RUN CONTROL WIRING BETWEEN CONDENSER & EVAPORATOR, 2 PR. @ 14 GA.

D. HEAT STRIP FOR DOOR WIRED TO SAME CIRCUIT AS WALK-IN LIGHTS, BY ELECTRICIAN.

SYMBOL LEGEND

- SINGLE CONVENIENCE OUTLET (SCO)
- DOUBLE CONVENIENCE OUTLET (DCO)
- GROUND FAULT CIRCUIT INTERRUPT DUPLEX OUTLET
- GROUND FAULT CIRCUIT INTERRUPT QUAD OUTLET
- JUNCTION BOX (JB)
- 4" SQUARE JUNCTION BOX (JB)
- 8"X8" JUNCTION BOX (JB)
- HEATING ELEMENT OR POWER
- MOTOR OUTLET
- SOLENOID OR CONTROL CIRCUIT
- SINGLE POWER OUTLET AS NOTED
- CONVENIENCE OUTLET, 2 CIRCUIT 120/208V-1PH, 3 WIRE (OR AS NOTED)
- SPECIAL POWER OUTLET AS NOTED (SO)
- LIGHT INDICATION
- CONDUIT AS NOTED
- SPECIAL OUTLET AS NOTED
- PANELBOARD
- DISCONNECT SWITCH
- Sw SWITCH AS NOTED
- SP SWITCH AND PILOT LIGHT
- EL ELEVATION AFF
- A AMPERES
- V VOLTS
- W WATTS
- PH PHASE
- AFF ABOVE FINISHED FLOOR
- BTC BRANCH TO CONNECTION POINT AND CONNECT EQUIPMENT
- BTF BRANCH TO FIXTURE, FURNISH AND INSTALL RECEPTACLE
- DFA DOWN FROM ABOVE
- SU STUB UP AFF
- HP HORSEPOWER
- KW KILOWATTS

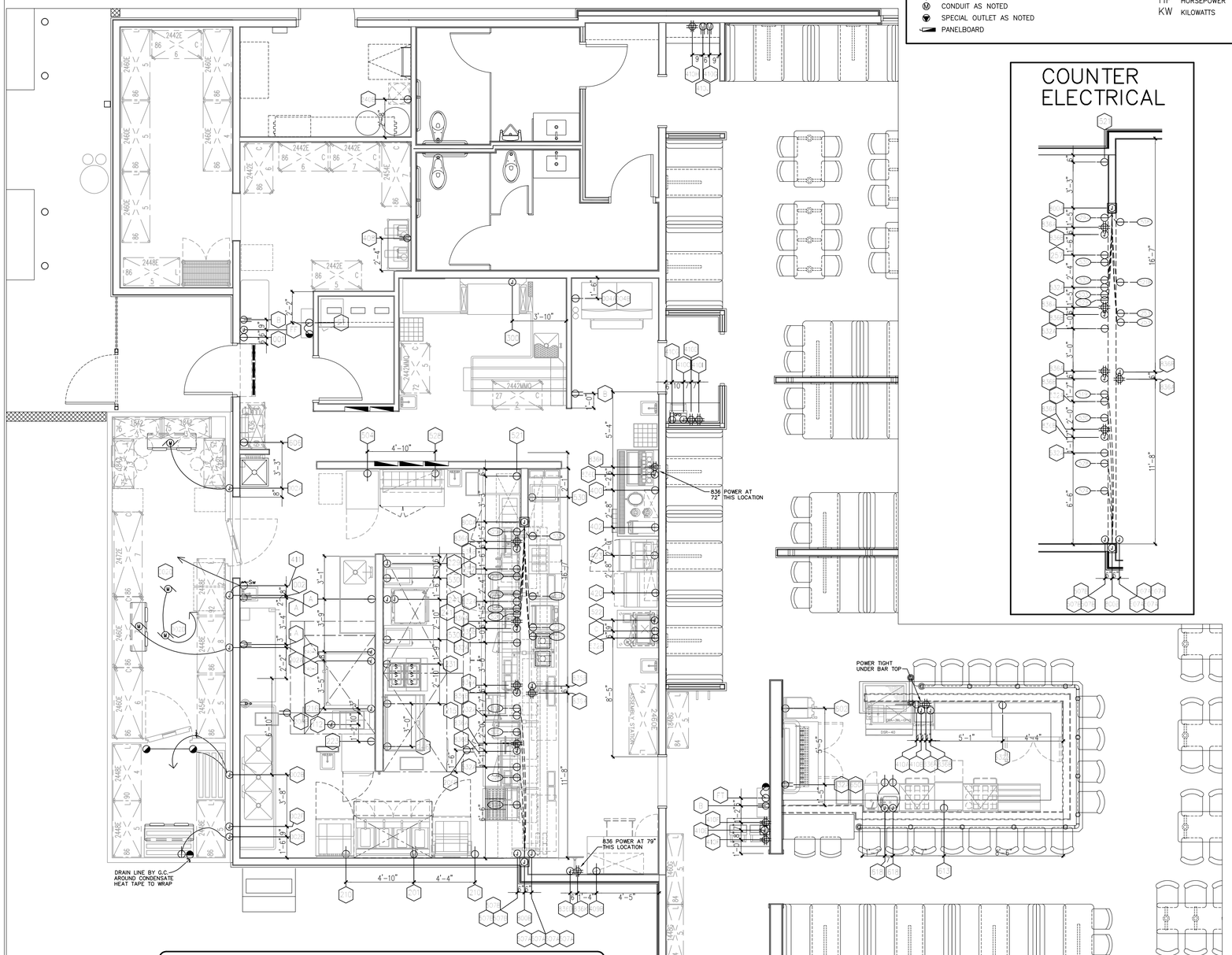

KITCHEN EQUIPMENT ELECTRICAL PLAN

ELECTRICAL ROUGH IN SCHEDULE

ITEM#	VOLT	ø	TYPE	HGT	CONNECTED TO:	LOAD AMPS	LOAD KW	LOAD HP	GENERAL NOTES:
001	120	1	SCO	96"	AIR CURTAIN/FLY FAN	7.5		3/4	GFCI BREAKER
002	120	1	JB	101"	WALK IN COOLER LIGHTS	4			BTC.
002A	120	1	JB	101"	WALK-IN COOLER COIL - (2 LOCATIONS)	4.0			BTC. - PROVIDE 20 AMPS CIRCUIT BREAKER
002B	120	1	JB	101"	WALK-IN FREEZER LIGHTS, DOOR HTR & PR PORT	10			BTC.
▲ 002C	208	3	JB	ROOF	REFRIGERATION RACK (COOLER)	22.6		3 1/4	TO ROOFTOP LOCATION (SEE ARCH. PLAN). PROVIDE 30 AMPS CIRCUIT BREAKER
▲ 002D	208	3	JB	ROOF	REFRIGERATION RACK (FREEZER)	14.8		3	TO ROOFTOP LOCATION (SEE ARCH. PLAN). PROVIDE 20 AMPS CIRCUIT BREAKER
002E	120	1	SCO	101"	HEAT TAPE		2.0		CORD AND PLUG BY ELECTRICIAN-GFCI OUTLET.
002F	208	1	JB	101"	EVAPORATOR COIL & HEATER	9.6			PROVIDE 20 AMPS CIRCUIT BREAKER
004A	120	1	SCO	88"	ICE MACHINE HEAD	1.15A			MAX. FUSE SIZE 15 AMPS - GFCI BREAKER
004B	208	3	JB	ROOF	ICE MACHINE COMPRESSOR ON ROOF	20.0			MAX. FUSE SIZE 25 AMP
112	120	1	JB	101"	HOOD LIGHTS	2.5			COMBI OVEN HOOD
133	120	1	SCO	46"	PORTABLE HOT FOOD WELL (2 LOCATIONS)	4.1			CORD AND PLUG - GFCI OUTLET
201	120	1	DCO	32"	FRYER/FILTER CONTROLS	12.2			CORD AND PLUG - GFCI BREAKER
206B	120	1	DCO	Ceiling	TIMER (3 LOCATIONS)	.083			CORD AND PLUG - GFCI BREAKER
210	120	1	SCO	52"	BATTER STATION (2 LOCATIONS)	11.27		1/3	CORD AND PLUG - GFCI BREAKER
215	120	1	SCO	24"	GRIDDLE	3.0			CORD AND PLUG - GFCI BREAKER
216	208	1	JBOX	24"	RETHERMALIZER		8		HARDWIRE
223	120	1	SCO	90"	REACH IN FREEZER	11.0		3/4	CORD AND PLUG - GFCI BREAKER
229	120	1	JB	101"	HOOD LIGHTS	6.0			COOK LINE HOOD - GFCI BREAKER
231	120	1	SCO	24"	MEAT REFRIGERATOR (2 LOCATIONS)	10.0			NEMA 5-15P -GFCI BREAKER
240-1	208	3	JBOX	24"	COMBINATION OVEN/STEAMER		16.4		
240-2	208	3	JBOX	48"	COMBINATION OVEN/STEAMER		16.4		HARDWIRE
240B	120	1	SCO	36"	COMBI R.O. SYSTEM	2.0			GFCI OUTLET
241	208	3	JBOX	36"/60"	TURBO CHEF OVENS (2 LOCATIONS)	30.0			HARDWIRE (40 AMP BREAKER)
246	120	1	SCO	30"	REFRIGERATED GRIDDLE	8.0		1/3	CORD AND PLUG-NEMA#5-15P - GFCI BREAKER
257	120	1	SCO	96"	QUAD HOLDING BIN	10.0			BTC TO QUAD OUTLET IN PASS SHELF -GFCI BREAKER
300	208	3	JB	68"	LOW TEMP DISHMACHINE	48.75		2 1/4	MINIMUM 60A ELECTRIC CIRCUIT
400	120	1	SCO	12"	SODA TOWER	15.0	1.1		CORD AND PLUG - GFCI BREAKER
402	120	1	SCO	48"	COMBINATION COFFEE AND TEA	15.0			CORD AND PLUG-NEMA#5-15P - GFCI OUTLET
408	120	1	DCO	90"	CARBONATORS	6.2		1/4	GFCI BREAKER
409B	120	1	SCO	42"	TO GO REFRIGERATOR	2.9		1/5	CORD AND PLUG - GFCI OUTLET - NEMA#5-15P
410A	120	1	DCO	37"	POS SYSTEM	15.0			DEDICATED CIRCUIT FOR KDS EQUIPMENTS
410B			JB	37"	POS SYSTEM-PROVIDE 3/4" EMPTY CONDUIT W/ PULL WIRE FOR POS	DATA CABLES TO J-BOX IN MANAGER OFFICE			
410C			JB	26"	POS SYSTEM-PROVIDE 3/4" EMPTY CONDUIT W/ PULL WIRE FOR POS	DATA CABLES TO J-BOX IN MANAGER OFFICE			
410D	120	1	QUAD	26"	POS SYSTEM	15.0			DEDICATED CIRCUIT FOR KDS EQUIPMENTS
410E			4"JB	18"	POS SYSTEM-PROVIDE 3/4" EMPTY CONDUIT W/ PULL WIRE FOR POS	DATA CABLES TO J-BOX IN MANAGER OFFICE			
410F	120	1	QUAD	18"	POS SYSTEM (2 LOCATIONS)	15.0			DEDICATED CIRCUIT FOR KDS EQUIPMENTS
410G	120	1	DCO	66"	CONVENIENCE OUTLET (2 LOCATIONS)	15.0			GFCI OUTLET
410H	120	1	QUAD	66"	RADIO CHARGER	15.0			GFCI OUTLET
410J	120	1	DCO	19"	TABLET CHARGER	15.0			GFCI OUTLET
410I	120	1	QUAD	24"	PRESTO TABLE DEVICES	15.0			GFCI OUTLET
411	120	1	SCO	60"	DAY DOT PRINTER	10.0			CORD AND PLUG - GFCI BREAKER
420	120	1	SCO	68"	CHIP HOLDING CABINET	12.6			CORD AND PLUG - GFCI OUTLET
423	115	1	SCO	51"	UNDERCOUNTER REFRIGERATOR (1 LOCATIONS)	2.0		1/10	CORD AND PLUG - GFCI OUTLET
503A	115	1	SCO	24"	UNDERCOUNTER REFRIGERATOR	2.0		1/10	CORD AND PLUG - GFCI BREAKER
504	115	1	SCO	90"	REACH IN REFRIGERATOR	2.7		1/4	CORD AND PLUG - GFCI BREAKER
507A	208	1	JB	63"	HEAT STRIP (UPPER SHELF)	10.5	2.2		HARD WIRE - GRAH-48D
507A	208	1	JB	63"	HEAT STRIP (UPPER SHELF)	10.5	2.2		HARD WIRE - GRAH-48D
507A	208	1	JB	63"	HEAT STRIP (UPPER SHELF)	10.5	2.2		HARD WIRE - GRAH-48D
507A	208	1	JB	63"	HEAT STRIP (UPPER SHELF)	10.5	2.2		HARD WIRE - GRAH-48D
507B	208	1	JB	52"	HEAT STRIP (LOWER SHELF)	10.5	2.2		HARD WIRE - GRAH-48D
507B	208	1	JB	52"	HEAT STRIP (LOWER SHELF)	10.5	2.2		HARD WIRE - GRAH-48D
507B	208	1	JB	52"	HEAT STRIP (LOWER SHELF)	9.13	1.9		HARD WIRE - GRAH-42D
521	120	1	SCO	48"	TORTILLA PRESS		1.8		CORD AND PLUG - GFCI OUTLET
522	120	1	SCO	18"	DROP-IN FREEZER	4.2		1/5	HARD WIRE
524	208	1	SCO	24"	FRY WARMER	14	2.89		CORD AND PLUG-NEMA#6-20P
528	120	1	SCO	36"	LINE REFRIGERATOR	12.0		1/3	CORD AND PLUG - GFCI BREAKER
530	120	1	SCO	42"	PORTABLE HOT FOOD WELL (4 LOCATIONS)	10.0	1.2		NEMA 5-15P - GFCI BREAKER
532A	120	1	SCO	96"	MICROWAVE OVEN (5 LOCATIONS)	16	1.2		CORD AND PLUG-NEMA#5-20R - GFCI BREAKER
532B	120	1	SCO	76"	MICROWAVE OVEN (1 LOCATIONS)	16	1.2		CORD AND PLUG-NEMA#5-20R - GFCI BREAKER
602	120	1	SCO	36"	MARGARITA MACHINE	16.0		1/4	CORD AND PLUG - NEMA#5-20R - GFCI BREAKER
606	120	1	SCO	96"	BEER CHILLER SYSTEM	7.0		1/3.	CORD AND PLUG - GFCI BREAKER
613	120	1	SCO		GLASS WASHER				
618	120	1	JB	12"	COCKTAIL STATION (2 LOCATIONS)	15			BTC ON SCO ON BLENDER SHELF -GFCI BREAKER
632A	120	1	SCO	18"	BACK BAR REFRIGERATOR	15.0		1/3	GFCI BREAKER
632B	120	1	SCO	18"	BACK BAR REFRIGERATOR	15.0		1/3	GFCI BREAKER
650	120	1	SCO	32"	LIGHTED LIQUOR DISPLAY	VER.		VER.	GFCI BREAKER. CONNECT TO ELEC. FEEDING 632A
⊗ 800A	–	–	–	32"	–	–	–	–	8"8 JUNCTION BOX
	208	1	SCO	41"	253 INDUCTION SKILLET WARMER (2 LOCATIONS)	15.0			NEMA 6-20R -BTC TO D.C.O. ON FIXTURE
	120	1	SCO	29"	503 UC REFRIGERATOR	3.2			CORD AND PLUG - GFCI BREAKER
	120	1	SCO	29"	518 LINE REFRIGERATOR (1) DR (3) PAN	11.27		1/3	CORD AND PLUG - GFCI BREAKER
	120	1	SCO	29"	521B TORTILLA PRESS		1.8		CORD AND PLUG - GFCI OUTLET
	120	1	SCO	29"	529 LINE REFRIGERATOR	12.0		1/3	CORD AND PLUG - GFCI BREAKER
	120	1	SCO	29"	529A LINE REFRIGERATOR	12.0		1/4	CORD AND PLUG - GFCI BREAKER
	120	1	SCO	29"	530 PORTABLE HOT FOOD WELLS (2 LOCATIONS)	10.0	1.2		NEMA 5-15P - GFCI BREAKER
⊗ 800B	–	–	–	12"	–	–	–	–	8"8 JUNCTION BOX
	208	1	SCO	29"	519 BUN TOASTER	13.4	2.78		BTC TO D.C.O. ON FIXTURE
	208	1	SCO	–	524 FRY WARMER	14	2.89		CORD AND PLUG-NEMA#6-20P
	120	1	SCO	29"	528 LINE REFRIGERATOR	12.0		1/3	CORD AND PLUG - GFCI BREAKER
	120	1	SCO	29"	530 PORTABLE HOT FOOD WELL	10.0	1.2		NEMA 5-15P - GFCI BREAKER
836A	120	1	QUAD	96"	KDS SYSTEM	15.0			DEDICATED CIRCUIT FOR KDS EQUIPMENTS
836B			JB	96"	KDS SYSTEM -PROVIDE 3/4" EMPTY CONDUIT W/ PULL WIRE FOR KDS	DATA CABLES TO J-BOX IN MANAGER OFFICE			
836C	120	1	DCO	90"	KDS SYSTEM	15.0			DEDICATED CIRCUIT FOR KDS EQUIPMENTS
836D			JB	90"	KDS SYSTEM -PROVIDE 3/4" EMPTY CONDUIT W/ PULL WIRE FOR KDS	DATA CABLES TO J-BOX IN MANAGER OFFICE			
836K	120	1	QUAD	90"	KDS SYSTEM	15.0			DEDICATED CIRCUIT FOR KDS EQUIPMENTS
A	120	1	DCO	48"	CONVENIENCE OUTLET (3 LOCATIONS)	20.0			GFCI OUTLET
B	120	1	DCO	24"	CONVENIENCE OUTLET (3 LOCATIONS)	20.0			GFCI OUTLET
C	120	1	SCO	48"	SQUEEZE BOTTLE WARMER	10.0			GFCI OUTLET
FT	120	1	SCO	78"	FLY TRAP (2 LOCATIONS)	10.0			CORD & PLUG - GFCI BREAKER
FT	–	–	JB	48"	REMOTE FIRE PULL SYSTEM	–			4 X 4 OCTAGONAL BOX

▲ REFER TO ARCHITECTURAL PLANS FOR ROOFTOP LOCATION.

ELECTRICAL ROUGH IN NOTES

A ALL ELECTRICAL OUTLETS SHOWN ON THIS PLAN ARE FOR FIXTURES AND EQUIPMENT SPECIFIED AS FURNISHED BY THE KITCHEN EQUIPMENT CONTRACTOR, UNLESS OTHERWISE NOTED. FOR ANY ADDITIONAL CONVENIENCE OUTLETS, SEE OTHER ELECTRICAL DRAWINGS & REQUIREMENTS.

B ALL DIMENSIONS GIVEN ARE FROM COLUMN CENTERLINE AND/OR FINISHED WALLS. ELEVATIONS GIVEN ARE FROM FINISHED FLOOR TO CENTERLINE OF OUTLET. ALL OUTLETS ARE TO BE SE HORIZONTALLY. ALL 120V OUTLETS NOT DESIGNATED WITH SPECIFIC LOADS, TO BE RATED AT 15 AMPS WITH MINIMUM LOOPING.

C ALL ROUGH-INS SHOWN ARE TO BE RUN INSIDE WALLS, (EXCEPT STUB-UPS). LOCATIONS INDICATED POINT OF EXIT FROM WALL, CEILING OR FLOOR.

D ELECTRICIAN TO BRANCH TO CONNECTION WHERE REQUIRED AND TO CONNECT ALL ELECTRICAL EQUIPMENT AND FIXTURES AND DO ANY INTERNAL WIRING REQUIRED IN THE FIXTURES INCLUDING INTER-WIRING TO APPLIANCES AS REQUIRED BY THE SPECIFICATIONS AND/OR DRAWINGS.

E KITCHEN EQUIPMENT CONTRACTOR TO FURNISH GALVANIZED JUNCTION BOXES IN FIXTURE CUT-OUTS AS REQUIRED BY THE ITEM SPECIFICATION AND INCLUDE APPROPRIATE ELECTRICAL RECEPTACLE, S/S FACEPLATE. WHERE BUILT-IN CIRCUIT BREAKER SUB-PANELS ARE CALLED FOR IN THE ITEM SPECIFICATIONS. THE KITCHEN CONTRACTOR IS TO PROVIDE AND INSTALL THIS PANEL ALONG WITH THE PROPERLY SIZED CIRCUIT BREAKERS.

F ALL ELECTRICAL OUTLET COVER PLATES ARE TO BE STAINLESS STEEL. THOSE REQUIRED IN BUILDING STRUCTURE ARE TO BE FURNISHED BY THE ELECTRICIAN, WITH RECEPTACLE. ALL MAIN BREAKER PANELS AND DISCONNECT SWITCHES REQUIRED BY OTHER ELECTRICAL DRAWINGS ARE TO BE FURNISHED AND INSTALLED BY THE ELECTRICAL CONTRACTOR AT TIME OF INSTALLATION.

G IF ELECTRICAL COOKING EQUIPMENT IS SPECIFIED, ELECTRICAL CONTRACTOR TO PROVIDE TIE-IN WIRING BETWEEN FIRE PROTECTION BOTTLE CONTROL HEAD, MICRO-SWITCH AND COOKING EQUIPMENT TO COMPLY WITH APPLICABLE LOCAL CODE REQUIREMENTS FOR EMERGENCY SHUTDOWN OF ENTIRE COOKLINE. SHUNT TRIP CIRCUITRY MAY BE REQUIRED, SEE OTHER ELECTRICAL PLANS.

H UNLESS OTHERWISE INDICATED THE ELECTRICAL LOADS SPECIFIED ARE THE CONNECTED LOADS, FUSE OR CIRCUIT BREAKER SIZE TO BE DETERMINED ACCORDINGLY, BASED UPON APPLICABLE CODE REQUIREMENTS. OMISSIONS OR ERRORS IN THE SCHEDULE DO NOT RELIEVE ELECTRICAL CONTRACTOR FROM COMPLETE AND CORRECT FINAL CONNECTION RESPONSIBILITY. REVIEW OF EQUIPMENT BROCHURE BOOK AND SHOP DRAWINGS WILL ASSURE CORRECTNESS OF THIS WORK.

J ELECTRICAL CONTRACTOR TO PROVIDE AND INSTALL ALL SWITCHES, STARTERS, DISCONNECTS, ETC. FOR ALL EQUIPMENT UNLESS NOTED OTHERWISE. ALL DISCONNECTS OR LOCK-OUT DEVICES, STARTERS, ETC. TO MEET N.E.C. AND O.S.H.A. STANDARDS.

K ELECTRICAL CONTRACTOR TO PROVIDE CONTROL WIRING AND ELECTRICAL SERVICE FOR REMOTE REFRIGERATION SYSTEMS FOR WALK-IN BOXES, ALSO COORDINATE LOCATION FOR SERVICE WITH THE ELECTRICAL ENGINEER.

L ELECTRICAL CONTRACTOR TO PROVIDE WRAP AROUND HEATER CABLE ON ALL EVAPORATION DRAIN LINES IN WALK-IN FREEZERS.

M ELECTRICAL CONTRACTOR TO INSTALL ALL LIGHTS IN WALK-IN COOLER/FREEZER AS REQUIRED, THRU DOOR SWITCH.

N ALL THREE (3) PHASE POWER CONNECTIONS TO BE ON A FOUR (4) WIRE SYSTEM, AND ALL SINGLE (1) PHASE POWER CONNECTIONS TO BE ON A THREE (3) WIRE SYSTEM.

O ALL WORK, RELATING TO THE INSTALLATIONS & HOOKUP OF THE SPECIFIED EQUIPMENT, IS TO BE PERFORMED IN FULL ACCORDANCE WITH APPLICABLE CITY, COUNTY, LOCAL, STATE & FEDERAL CODES AND ALL OTHER GOVERNMENTAL REGULATORY REQUIREMENTS.

P ELECTRICAL CONTRACTOR IS REQUIRED TO FURNISH AND INSTALL ALL ELECTRICAL COMPONENTS NECESSARY TO PROVIDE SERVICE TO LOCATIONS & EQUIPMENT SHOWN ON THE SHEET UNLESS NOTED OTHERWISE. ELECTRICAL CONTRACTOR IS ALSO RESPONSIBLE FOR MAKING FINAL CONNECTIONS TO EQUIPMENT AND FITTINGS SUPPLIED AND INSTALLED BY K.E.C.

R ALL ELECTRICAL OUTLETS TO EQUIPMENTS AT PASS THRU WALL SHALL BE MOUNTED IN BOTTOM OF ELECTRICAL CHASE.

S ALL DEDICATED ELECTRICAL OUTLETS TO BE "ORANGE" IN COLOR.

T ALL 120V, SINGLE PHASE, 15 AND 20 AMPERE RECEPTACLES WILL BE ON A GFCI BREAKER OR GFCI OUTLET.

REVISIONS	BY

BRINKER INTERNATIONAL * 3000 OLYMPUS BOULEVARD * DALLAS, TEXAS 75019* (972)980-9917

chili's

BRINKER INTERNATIONAL

CL #	DATE IMPLEMENTED

CHILI'S PROTO 18.5 FLIP STRETCH ELECTRICAL PLAN

DATE: 03/06/24

SCALE: 1/4" = 1'-0"

DRAWN: CR

CAD FILE:

FOOD SERVICE ELECTRICAL

SHEET K301

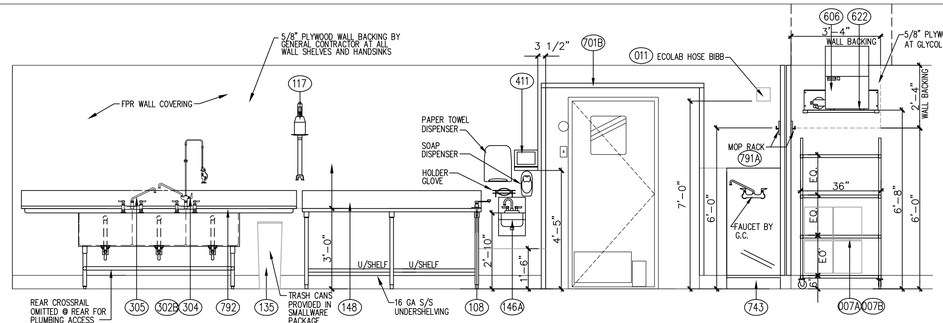

ELEVATION "A"
SCALE: 3/8" = 1'-0"

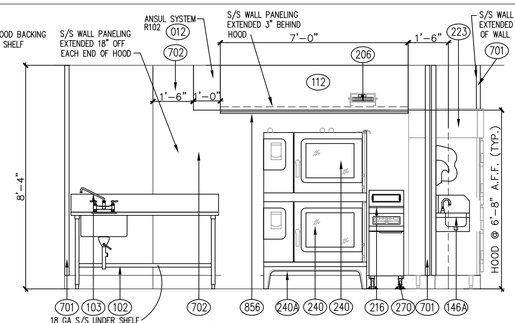

ELEVATION "B"
SCALE: 3/8" = 1'-0"

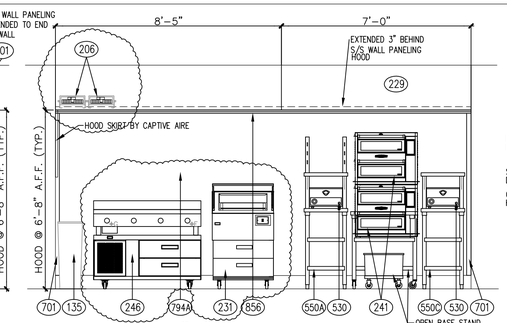

ELEVATION "C"
SCALE: 3/8" = 1'-0"

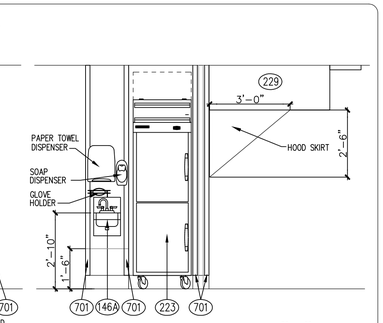

ELEVATION "D"
SCALE: 3/8" = 1'-0"

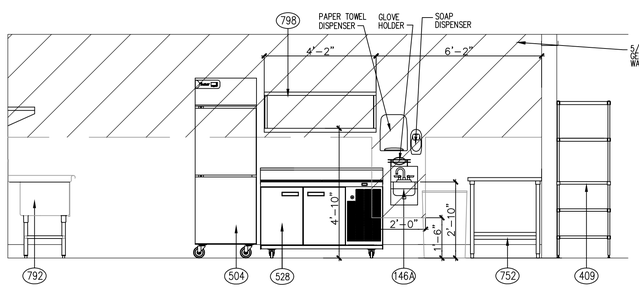

ELEVATION "E"
SCALE: 3/8" = 1'-0"

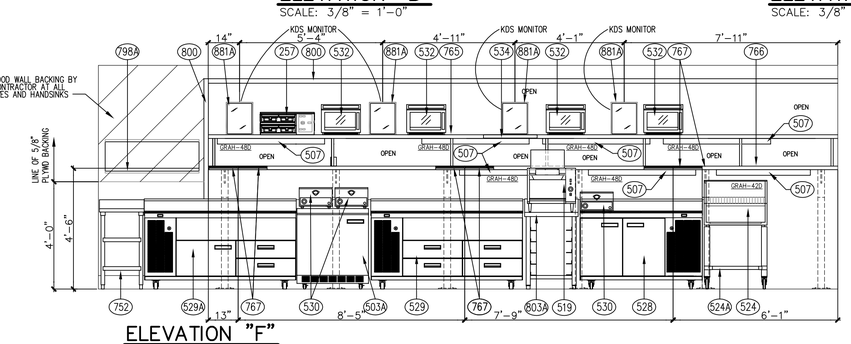

ELEVATION "F"
SCALE: 3/8" = 1'-0"

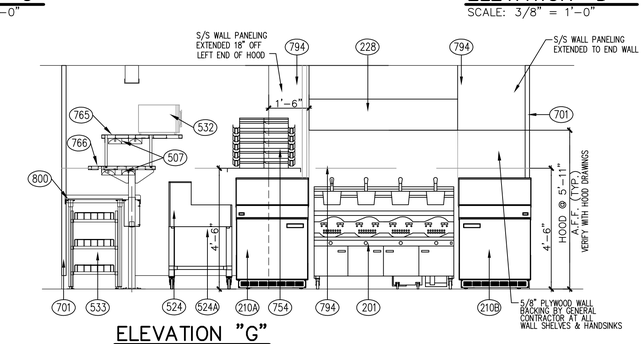

ELEVATION "G"
SCALE: 3/8" = 1'-0"

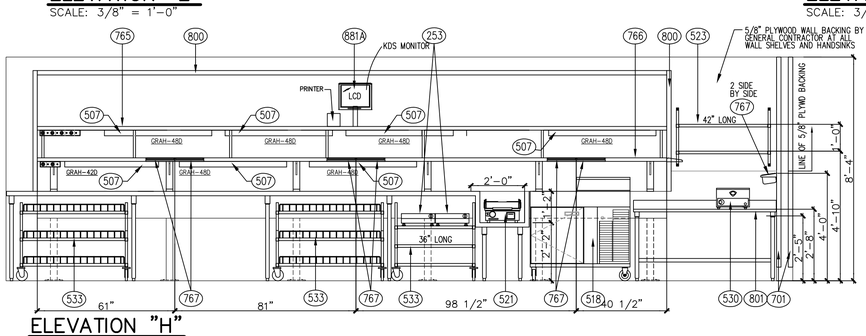

ELEVATION "H"
SCALE: 3/8" = 1'-0"

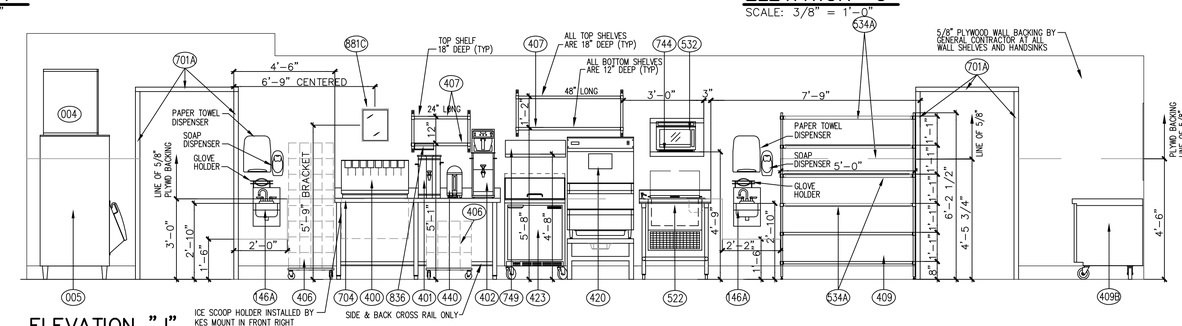

ELEVATION "J"
SCALE: 3/8" = 1'-0"

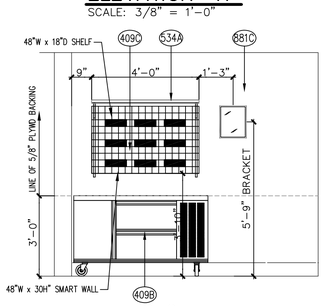

ELEVATION "K"
SCALE: 3/8" = 1'-0"

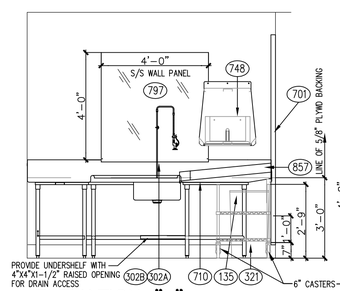

ELEVATION "L"
SCALE: 3/8" = 1'-0"

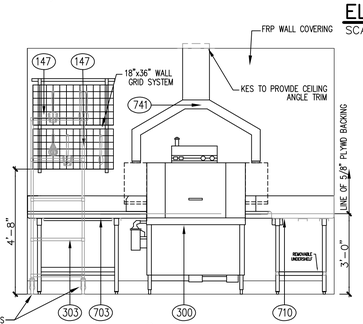

ELEVATION "M"
SCALE: 3/8" = 1'-0"

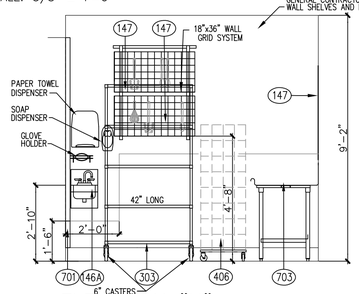

ELEVATION "N"
SCALE: 3/8" = 1'-0"

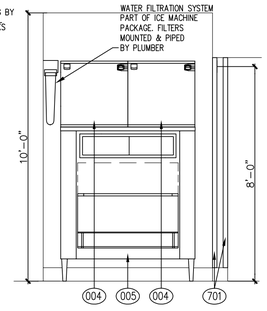

ELEVATION "O"
SCALE: 3/8" = 1'-0"

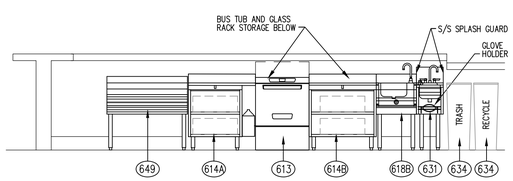

ELEVATION "P"
SCALE: 3/8" = 1'-0"

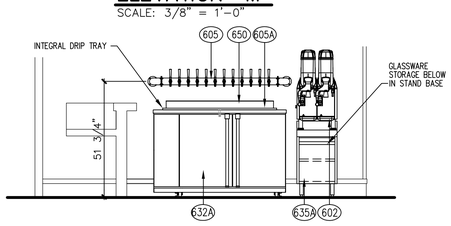

ELEVATION "Q"
SCALE: 3/8" = 1'-0"

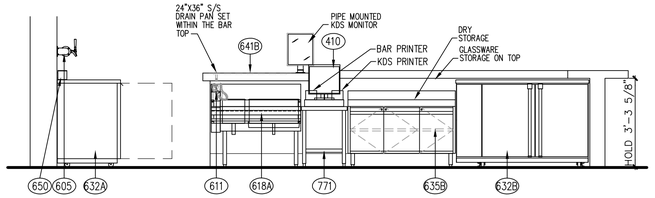

ELEVATION "R"
SCALE: 3/8" = 1'-0"

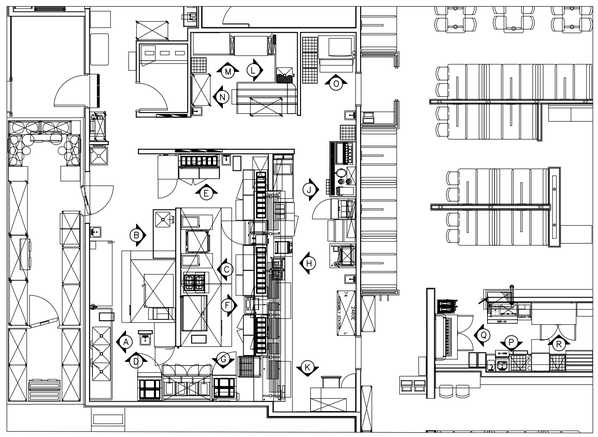

KEY PLAN
SCALE: NOT TO SCALE

REVISIONS	BY

BRINKER INTERNATIONAL * 3000 OLYMPUS BOULEVARD * DALLAS, TEXAS 75019 * (214)980-9917

chili's

BRINKER INTERNATIONAL

CL #	DATE IMPLEMENTED

CHILI'S PROTO 18.5 FLIP STRETCH FSE EQUIPMENT ELEVATIONS

DATE: 03/07/24
SCALE: 3/8" = 1'-0"
DRAWN: CR
CAD FILE:

FOOD SERVICE ELEVATIONS

SHEET
K401

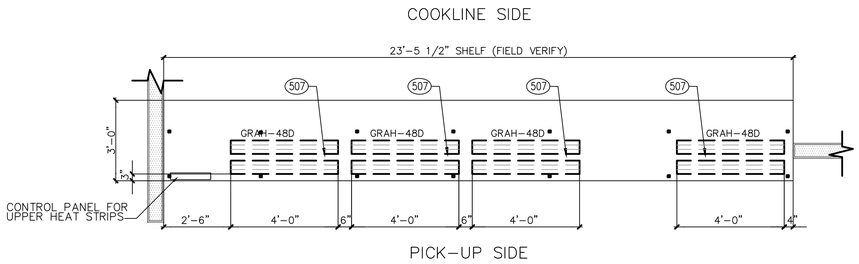

765 REFLECTED PLAN / UPPER SHELF

SCALE: 3/8" = 1'-0"

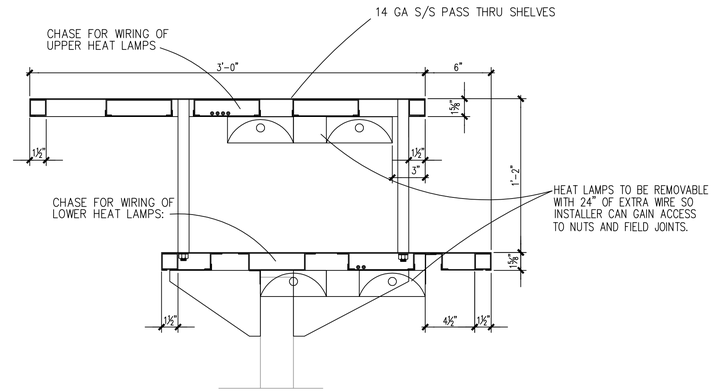

THRU UPPER & LOWER SHELVES

NO SCALE

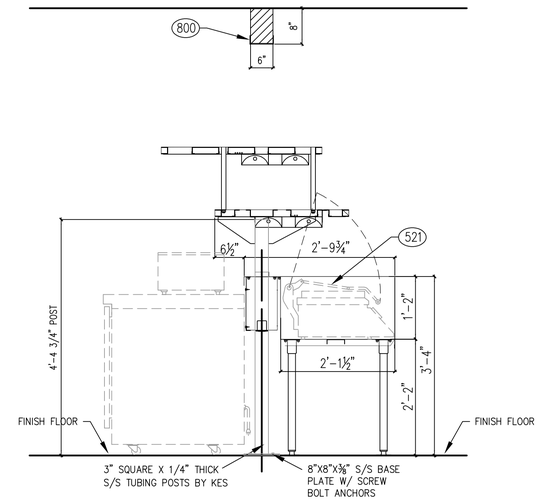

SECTION B K501

3/4" = 1'- 0"

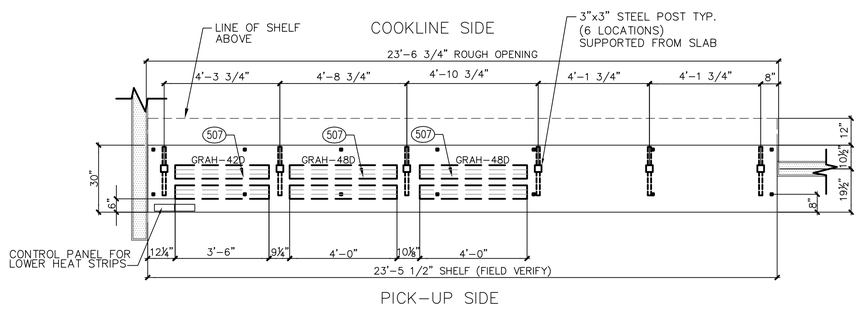

766 REFLECTED PLAN / LOWER SHELF

SCALE: 3/8" = 1'-0"

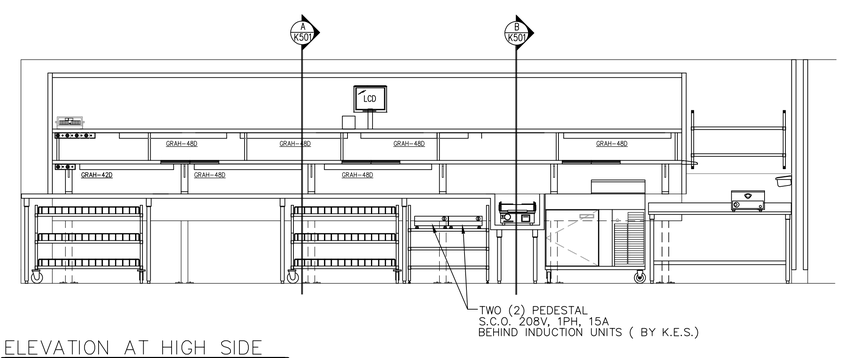

ELEVATION AT HIGH SIDE

SCALE: 3/8" = 1'-0"

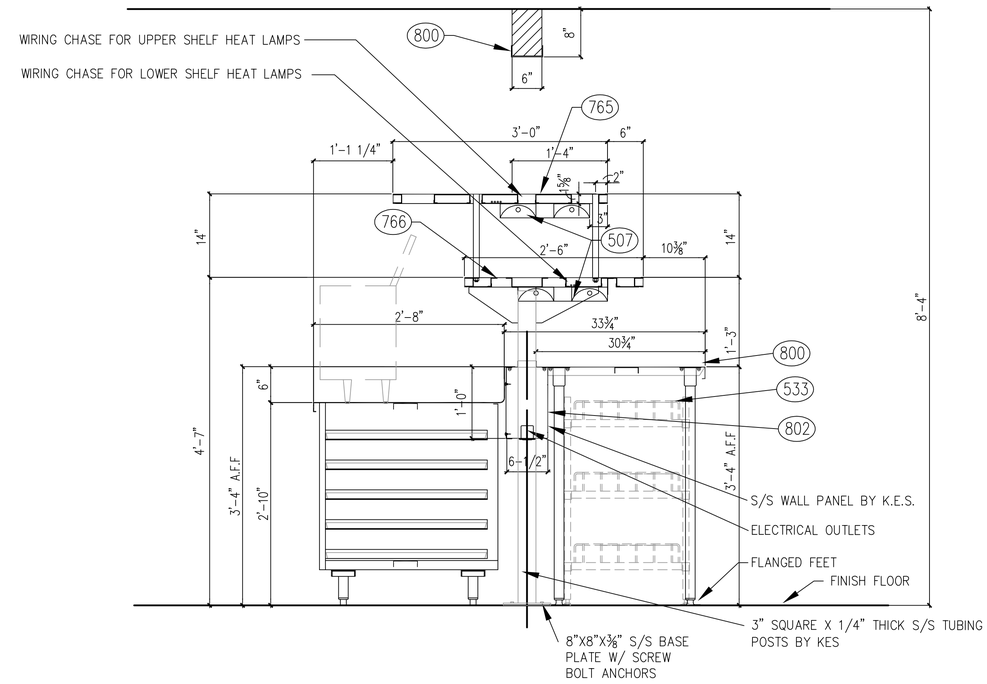

SECTION A K501

1" = 1'- 0"

REVISIONS	BY

BRINKER INTERNATIONAL * 3000 OLYMPUS BOULEVARD * DALLAS, TEXAS 75019 * (214)980-9917

chili's

BRINKER INTERNATIONAL

CL #	DATE IMPLEMENTED

CHILI'S
PROTO 18.5 FLIP STRETCH
MISC. DETAILS

DATE: 03/07/24
SCALE: AS NOTED
DRAWN: CR
CAD FILE:

FOOD SERVICE DETAILS

SHEET

K501

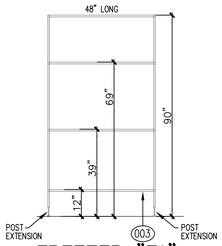

FREEZER "F1"
SCALE: 3/8" = 1'-0"

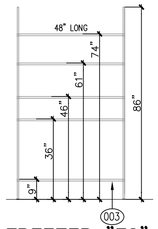

FREEZER "F2"
SCALE: 3/8" = 1'-0"

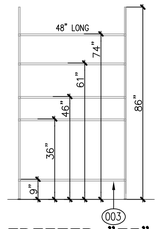

FREEZER "F3"
SCALE: 3/8" = 1'-0"

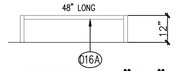

FREEZER "F4"
SCALE: 3/8" = 1'-0"

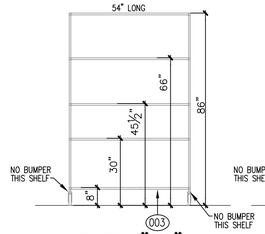

COOLER "R1"
SCALE: 3/8" = 1'-0"

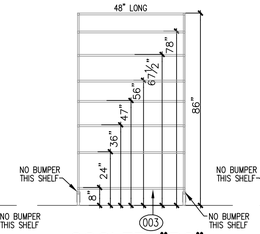

COOLER "R2"
SCALE: 3/8" = 1'-0"

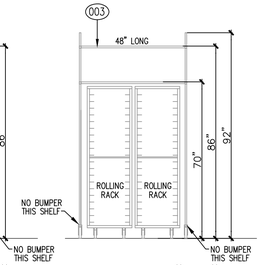

COOLER "R3"
SCALE: 3/8" = 1'-0"

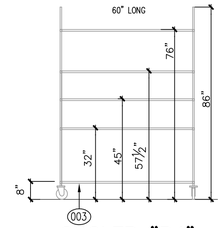

COOLER "R4"
SCALE: 3/8" = 1'-0"

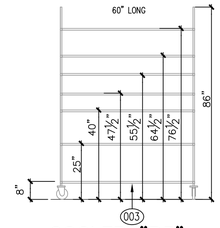

COOLER "R5"
SCALE: 3/8" = 1'-0"

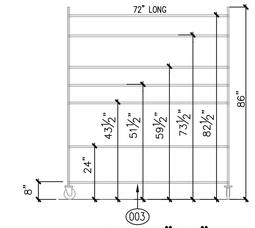

COOLER "R6"
SCALE: 3/8" = 1'-0"

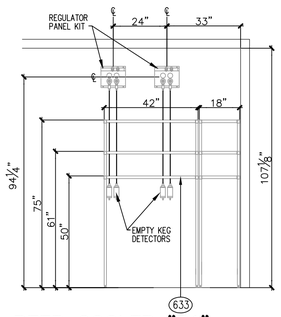

BEER COOLER "B1"
SCALE: 3/8" = 1'-0"

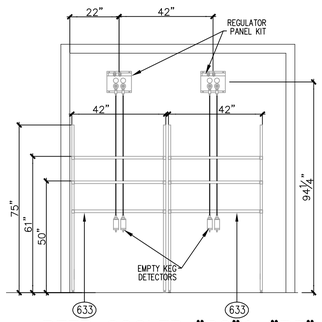

BEER COOLER "B2"& "B3"
SCALE: 3/8" = 1'-0"

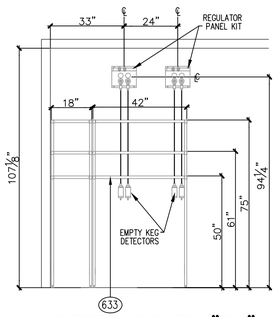

BEER COOLER "B4"
SCALE: 3/8" = 1'-0"

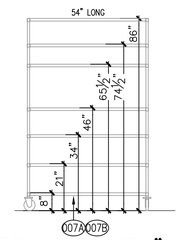

DRY STORAGE "DS1"
SCALE: 3/8" = 1'-0"

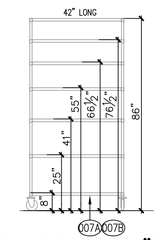

DRY STORAGE "DS2"
SCALE: 3/8" = 1'-0"

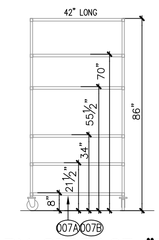

DRY STORAGE "DS3"
SCALE: 3/8" = 1'-0"

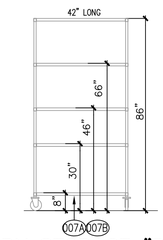

DRY STORAGE "DS4"
SCALE: 3/8" = 1'-0"

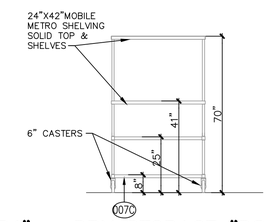

DRY STORAGE "DS6"
SCALE: 3/8" = 1'-0"

NOTE: VERIFY ON SHEET #A151 FOR ACTUAL CO2 FILL BOX LOCATION.

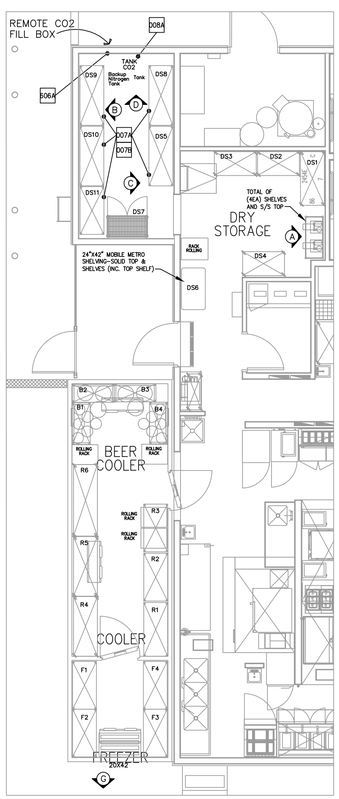

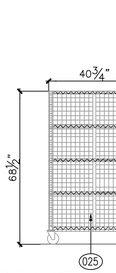

DRY STORAGE "DS7"
SCALE: 3/8" = 1'-0"

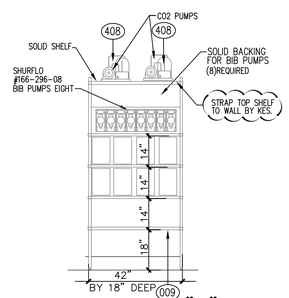

ELEVATION "A"
SCALE: 3/8" = 1'-0"

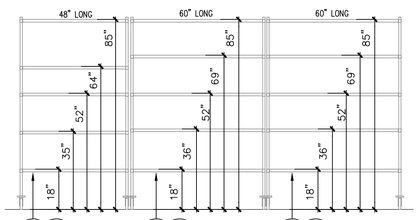

ELEVATION "B" DS9, DS10, & DS11
SCALE: 3/8" = 1'-0"

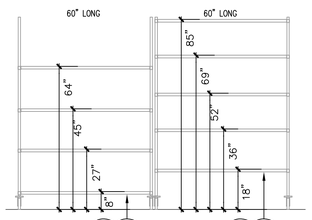

ELEVATION "C" DS5, & DS8
SCALE: 3/8" = 1'-0"

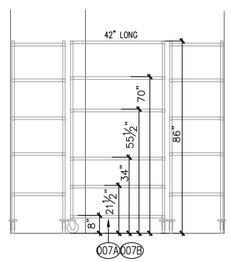

ELEVATION "D"
SCALE: 3/8" = 1'-0"

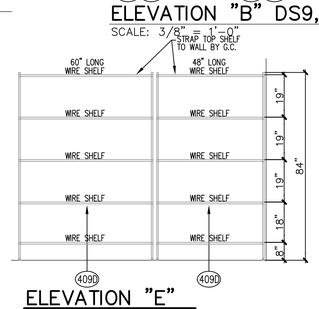

ELEVATION "E"
SCALE: 3/8" = 1'-0"

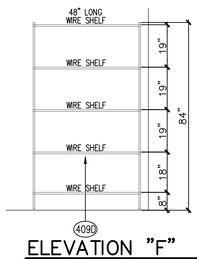

ELEVATION "F"
SCALE: 3/8" = 1'-0"

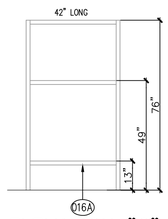

ELEVATION "G"
SCALE: 3/8" = 1'-0"

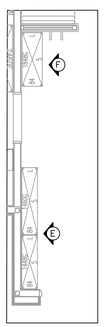

KEY PLAN
SCALE: NOT TO SCALE

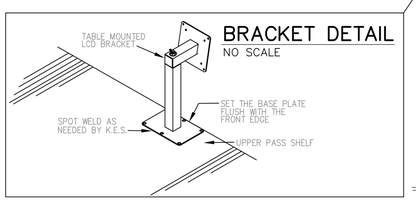

BRACKET DETAIL
NO SCALE

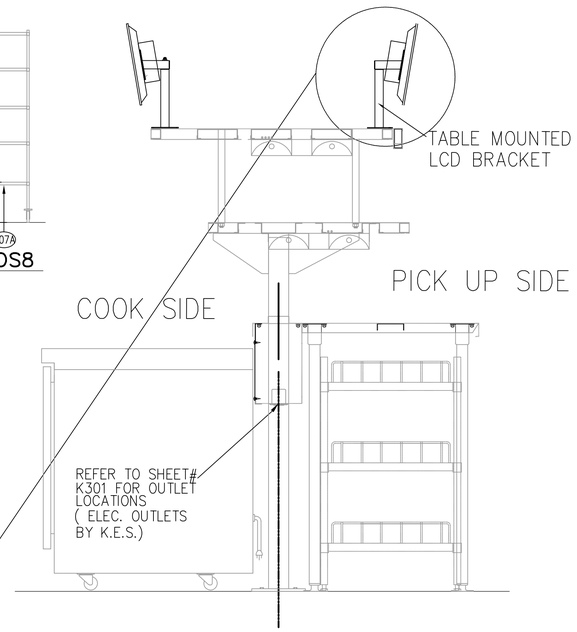

TYPICAL SECTION THRU K.D.S. SYSTEM
NOT TO SCALE

REVISIONS	BY

BRINKER INTERNATIONAL * 3000 OLYMPUS BOULEVARD * DALLAS, TEXAS 75019 * (214)980-9917

chili's

BRINKER INTERNATIONAL

CL #	DATE IMPLEMENTED

CHILI'S
PROTO 18.5 FLIP STRETCH
FSE EQUIPMENT ELEVATIONS

DATE: 03/07/23
SCALE: 3/8" = 1'-0"
DRAWN: CR
CAD FILE:

FOOD SERVICE SHELVING INSTALLATION & SHED DETAILS

SHEET
K502

RESPONSIBILTY OF ELECTRICAL SERVICE

	ELECTRIC UTILITY COMPANY	GENERAL CONTRACTOR
PRIMARY CONDUIT	--	X
PRIMARY CONDUCTORS	X	--
TRANSFORMER PAD	--	X
TRANSFORMER ON POLE	--	--
SECONDARY CONDUIT TO SES CABINET	X	--
SECONDARY CONDUCTORS TO METER/CT	X	--
SECONDARY CONDUIT FROM METER TO MAIN PANEL	X	--
SECONDARY CONDUCTORS FROM METER TO MAIN PANEL	X	--

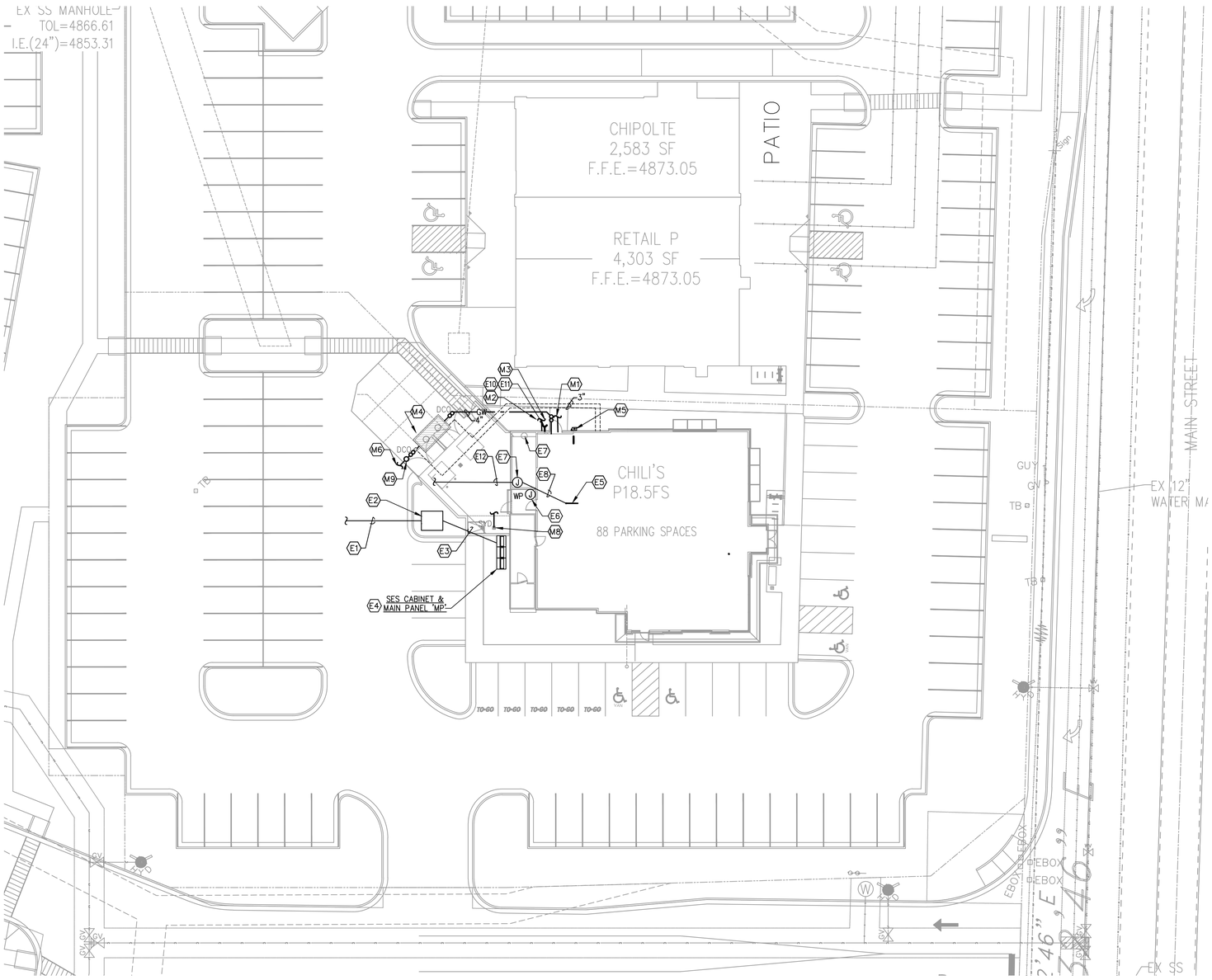

GENERAL NOTES

A.	VERIFY LOCATION OF ALL EQUIPMENT WITH ARCHITECT AND OTHER TRADES.
B.	ELECTRICAL CONTRACTOR IS RESPONSIBLE FOR FILED VERIFICATION OF ALL CONDITIONS AND IS ALSO RESPONSIBLE FOR REPORTING AND CONFLICTS TO THE ENGINEER PRIOR TO THE START OF WORK.
C.	PLUMBING CONTRACTOR SHALL FIELD VERIFY EXISTING LOCATIONS, ELEVATIONS AND FLOW DIRECTIONS OF GREASE INTERCEPTOR AND VENTS, GREASE AND SANITARY SEWERS, DOMESTIC WATER, GAS, ETC. PRIOR TO BEGINNING WORK OR ORDERING MATERIALS. CONTACT ARCHITECT OR ENGINEER IF ANY SIGNIFICANT DISCREPANCIES ARE FOUND.
D.	UTILITY INFORMATION SHOWN ON THE PLANS IS FROM PRELIMINARY CONTACT WITH THE RESPECTIVE UTILITIES AND/OR FROM INFORMATION PROVIDED BY OTHERS. THE CONTRACTOR SHALL CONTACT THE UTILITY COMPANIES PRIOR TO BIDDING TO OBTAIN THE MOST UP TO DATE INFORMATION AND INSTALLATION REQUIREMENTS. INCLUDE ALL COSTS IN THE BASE BID, INCLUDING UTILITY CONNECTION, METER, AND OTHER FEES. REPORT ANY DISCREPANCY TO THE ARCHITECT OR ENGINEER.
E.	CONTRACTOR SHALL REQUEST THAT UTILITY COMPANIES LOCATE AND MARK ALL UNDERGROUND WATER PIPES, SANITARY SEWERS, GAS PIPES, ELECTRICAL AND COMMUNICATIONS CONDUITS AND DUCTBANKS, ETC. PRIOR TO DIGGING OR TRENCHING ON SITE. CONTRACTOR SHALL BE FULLY RESPONSIBLE AND BEAR COST FOR REPAIRING ANY UTILITY DAMAGE ON SITE.

ELECTRICAL KEYED NOTES

E1.	(2) 4" PVC E.C. WITH PULL WIRE FOR UNDERGROUND PRIMARY ELECTRICAL SERVICE ENTRANCE. VERIFY EXACT ROUTING AND REQUIREMENTS WITH ELECTRIC UTILITY COMPANY.
E2.	ELECTRIC UTILITY COMPANY PAD MOUNTED TRANSFORMER. VERIFY EXACT LOCATION AND REQUIREMENTS WITH ELECTRIC COMPANY.
E3.	UNDERGROUND ELECTRICAL SERVICE ENTRANCE ALUMINUM FEEDER (SECONDARY). PROVIDE (3) SETS OF 4#600KCMIL IN 4" CONDUIT AND (1) EMPTY 4" CONDUIT WITH PULLWIRE. SEE RISER DIAGRAM FOR ADDITIONAL REQUIREMENTS ON DRAWING 'E201'.
E4.	ELECTRIC UTILITY COMPANY SES CABINET WITH PULL SECTION, METER AND PANEL MP. VERIFY EXACT LOCATION AND REQUIREMENTS WITH ELECTRIC UTILITY COMPANY.
E5.	4'x4'x5/8" FIRE RESISTANT PLYWOOD TELEPHONE TERMINATION BOARD FOR DEMARCATION POINT. TOP OF PLYWOOD BOARD SHALL BE AT 7'-6".
E6.	WEATHERPROOF JUNCTION BOX AND RECEPTACLE @ 6'-0" FOR LAWN SPRINKLER SYSTEM. PROVIDE 2" CONDUIT FROM JUNCTION BOX TO LAWN AREA. COORDINATE SPRINKLER SYSTEM WITH LANDSCAPE DRAWINGS.
E7.	WEATHERPROOF JUNCTION BOX AND 1" CONDUIT WITH PULL WIRE FOR FUTURE TRASH COMPACTOR. REFER TO ENLARGED SERVICE YARD ON DRAWING 'E201' FOR ADDITIONAL INFORMATION.
E8.	EXTEND 2" E.C. WITH PULL WIRE FROM TELEPHONE DEMARCATION IN STORAGE SHED TO PLYWOOD TELEPHONE PUNCH BOARD IN OFFICE. SEE OFFICE-POWER DETAIL ON DRAWING 'E202' FOR LOCATION AND REQUIREMENTS.
E9.	CONDUIT ROUTING FOR SITE LIGHTING IS SHOWN FOR SCHEMATIC PURPOSES ONLY. CONTRACTOR SHALL VERIFY SITE CONDITIONS AND SHALL INSTALL THE CONDUITS IN THE SHORTEST ROUTE BETWEEN FIXTURES.
E10.	REMOTE FIRE DEPARTMENT CONNECTION. VERIFY EXACT LOCATION. REFER TO CIVIL UTILITY PLANS.
E11.	PROVIDE 1" EMPTY PVC CONDUIT W/PULL WIRE FROM FDC TO BUILDING FIRE ALARM PANEL FOR MONITORING FLOW/TAMPER SWITCH. REFER TO SHEET T101 FOR FIRE ALARM PANEL LOCATION. CONFIRM EXACT LOCATION OF FDC WITH CIVIL.
E12.	INTERCEPT EXISTING (2) 2" PVC E.C., (1) FOR TELEPHONE AND (1) FOR INTERNET, WITH PULL WIRE FROM LANDLORD PROVIDED LOCATION FOR UNDERGROUND SERVICE ENTRANCE TO DEMARCATION IN STORAGE SHED. SEE ENLARGED SERVICE YARD PLAN ON DETAIL 05/E201 FOR LOCATION OF TELEPHONE DEMARCATION. REFER TO CIVIL FOR CONTINUATION. VERIFY EXACT ROUTING AND REQUIREMENTS WITH TELEPHONE COMPANY.

MECHANICAL KEYED NOTES

M1.	2" DOMESTIC WATER SUPPLY. MAINTAIN 12" MINIMUM CLEARANCE FROM THE TOP OF THE SANITARY SEWER LINE. REFER TO CIVIL DRAWINGS FOR CONTINUATION.
M2.	6" FIRE SERVICE. FIRE RISER TO BE SIZED PER SPRINKLER CONTRACTOR HYDRAULIC CALCULATIONS. BACKFLOW PREVENTER TO BE SIZED PER FIRE LINE DESIGN. REFER TO CIVIL DRAWINGS FOR CONTINUATION.
M3.	FIRE DEPARTMENT CONNECTION.
M4.	PROPOSED LOCATION FOR GREASE INTERCEPTOR. REFER TO PLUMBING SCHEDULES FOR SIZE.
M5.	GAS METER. TOTAL GAS LOAD IS 1,856 CFH. DETERMINE ALL REQUIREMENTS FROM GAS CO. AND PROVIDE THE REQUIRED DELIVERY PRESSURE (2 PSI). REFER TO P202 FOR GAS RISER DIAGRAM AND GAS SCHEDULE. PROVIDE SHUT-OFF VALVE UPSTREAM OF METER IN ACCORDANCE WITH IFGC 409.2 AND FIRE MARSHAL REQUIREMENTS. PROVIDE PERMANENT METAL VALVE TAG AND NOTE "GAS SERVICE SHUT-OFF".
M6.	4" SANITARY SEWER. REFER TO CIVIL DRAWINGS FOR CONTINUATION.
M7.	CO2 TANK. INSTALL SURFACE MOUNTED RECHARGE BOX ON OUTSIDE OF FENCE/CMU. PROVIDE 2" PVC CONDUIT FROM SHED TO CARBONATORS AT BAG IN BOX IN KITCHEN. TUBING IS N.I.C. REFER ALSO TO KITCHEN PLANS.
M8.	4" AREA DRAIN TO GREASE WASTE. SEE CIVIL DRAWINGS FOR CONTINUATION AND MORE INFORMATION.
M9.	INSPECTION PORT.

ENGINEER:

BRIAN E. CHANDLER, PE

6201 CAMPUS CIRCLE DRIVE E.
IRVING, TEXAS 75038
TEL: 972.870.1288
WWW.IDSTUDIO4.COM
E-MAIL: bchandler@idstudio4.com

CORPORATE:
BRINKER RESTAURANT CORPORATION,
A VIRGINIA CORPORATION
3000 OLYMPUS BLVD.
DALLAS, TEXAS 75019
972.980.9917
www.brinker.com

09/23/2024
ISSUE FOR BID
THESE DOCUMENTS ARE FOR BIDDING PURPOSES ONLY. DO NOT USE FOR CONSTRUCTION.

RESTAURANT #CH1679
PROTOTYPE 18.5FS

CHILI'S TOOELE
951 N MAIN STREET
TOOELE, UT 84074

CLIENT: BRINKER RESTAURANT CORP.
A VIRGINIA CORPORATION

DATE	DESCRIPTION
6/27/2024	ISSUE FOR PERMIT
9/23/2024	ISSUE FOR BID

△	DATE	DESCRIPTION

PROJECT NUMBER:
CHI24007

SHEET TITLE:
MPE SITE PLAN

SHEET NUMBER:
MPE101

MECHANICAL, ELECTRICAL & PLUMBING SITE PLAN
1"=20'-0"

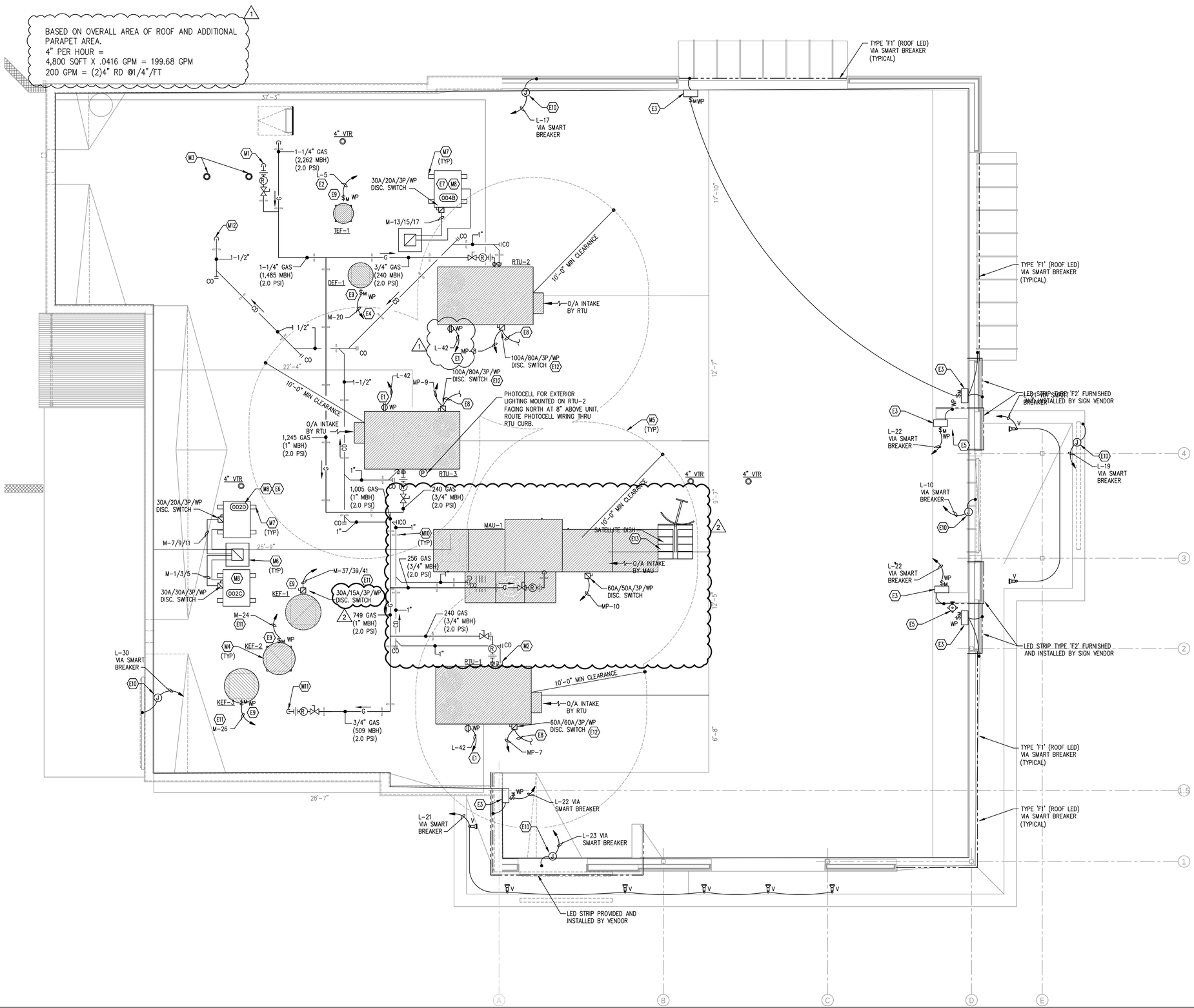

MPE ROOF PLAN
1/4"=1'-0"
1

GENERAL NOTES

A.	REFER TO ARCHITECTURAL DRAWINGS FOR CURBS AND PENETRATIONS.
B.	ELECTRICAL CONTRACTOR IS RESPONSIBLE FOR ALL ELECTRICAL WORK SHOWN ON THE MECHANICAL DRAWINGS.
C.	ROUTE ALL ELECTRICAL POWER AND CONTROLS CONDUIT THROUGH CURBS. DO NOT RUN THROUGH DUCTWORK OR PENETRATE ROOF. COORDINATE WITH OTHER TRADES.
D.	REFER TO SHEET 'E102' AND SHEET 'T101' FOR ADDITIONAL CONNECTIONS TO ROOFTOP EQUIPMENT FROM BELOW.
E.	WHERE SHOWN ON PLAN, PROVIDE LOCKABLE MOTOR RATED TOGGLE SWITCH LISTED AND MARKED "SUITABLE AS MOTOR DISCONNECT," PER NEC 430.109(A)(6), UL LISTED FOR WET LOCATION. TYPICAL FOR ALL BUILDING SIGNS AND LIGHTING TRANSFORMERS. LOCATE WITHIN SIGHT OF SIGN/LIGHTING TRANSFORMER OR PROVIDE WITH LOCK-OPEN CIRCUIT BREAKER.
F.	ALL OUTDOOR AIR INTAKES BY MECHANICAL EQUIPMENT SHALL HAVE A MINIMUM 10'-0" HORIZONTAL CLEARANCE FROM THE DISCHARGE OF ANY EXHAUST FAN, COMBUSTION EXHAUST OR PLUMBING VENT.
G.	REFER TO 'M401' FOR ADDITIONAL FACTORY INSTALLED (INTEGRAL) DISCONNECT ELECTRICAL INFORMATION.

ELECTRICAL KEYED NOTES

#	
E1.	ROOFTOP UNIT SHALL BE FACTORY EQUIPPED WITH WP/GFI MAINTENANCE RECEPTACLE. FIELD WIRE TO CIRCUIT INDICATED THROUGH THE BASE/CURB.
E2.	EXHAUST FAN 'TEF-1' SHALL BE CONNECTED TO OCCUPANCY SENSORS MOUNTED IN RESTROOMS. EXHAUST FAN SHALL OPERATE WHEN EITHER OR BOTH OCCUPANCY SENSORS ACTIVATE.
E3.	PROVIDE SURFACE MOUNTED, WEATHERPROOF "BRACKET" ENCLOSURE FOR POWER SUPPLY WITH MOTOR-RATED TOGGLE SWITCH TO POWER TYPE 'F2' LED LIGHTS. DO NOT EXCEED A MAX LENGTH OF 24FT PER EACH 60W, 12VDC POWER SUPPLY. REFER TO ARCHITECTURAL DRAWINGS/LED VENDOR FOR INSTALLATION REQUIREMENTS.
E4.	PROVIDE INTERLOCK CONTROL WIRING FOR EXHAUST FAN DEF-1, AND DISHMACHINE AS REQUIRED. COORDINATE EXACT REQUIREMENTS WITH MANUFACTURER.
E5.	PROVIDE WEATHERPROOF JUNCTION BOX WITH 3/4" EMPTY CONDUIT WITH PULLWIRE FOR SECURITY SIREN (TAMPER/WEATHER PROOF) MOUNTED TO SIDE OF TOWER BELOW PARAPET WALL HEIGHT. STUB CONDUIT DOWN WITHIN SPACE BELOW. REFER TO SHEET T101 FOR ADDITIONAL INFORMATION.
E6.	INTERWIRE SERVICE FROM FREEZER COMPRESSOR AND TIMECLOCK TO BLOWER COIL FOR AUTOMATIC DEFROST SYSTEM TO STOP COMPRESSOR BLOWER COIL FANS AND START HEATERS IN COIL. RUN CONDUIT ABOVE CEILING. THESE ITEMS ARE NOT PRE-WIRED AND WILL REQUIRE CONNECTIONS BY ELECTRICIAN AND FIELD WIRING.
E7.	BTC ON JUNCTION BOX FOR ELECTRICAL SERVICE FROM ICE MACHINE PRODUCTION HEAD BELOW TO REMOTE CONDENSING UNIT ON ROOF.
E8.	ELECTRICAL CONTRACTOR SHALL RUN CONTROL WIRING TO ROOF TOP UNITS, SENSORS, AND THERMOSTATS. COORDINATE WITH MECHANICAL CONTRACTOR.
E9.	FACTORY INSTALLED WEATHERPROOF MOTOR RATED SWITCH. PROVIDE 24" FLEXIBLE LOOP CONNECTION TO UNIT FOR MAINTENANCE.
E10.	VERIFY LOCATION & NUMBER OF SIGNS WITH SIGN VENDOR. CONTROL SIGN CIRCUITS THROUGH CONTACTOR, REFER TO LIGHTING WIRING DIAGRAM DETAIL, SHEET E203. PROVIDE FLUSH MOUNTED WP J-BOX IN FACE OF WALL. CONTRACTOR TO PROVIDE AND INSTALL GASKETED COVER PLATE WITH CENTER WEATHERPROOF NIPPLE AT EACH WALL MOUNTED SIGN. PROVIDE 2'-0" SEAL-TITE CONDUIT WHIP AT ALL WALL MOUNTED SIGN JUNCTION BOXES AND A 6'-0" WHIP AT CANOPY MOUNTED SIGN JUNCTION BOXES. REFER TO THE BUILDING SIGNAGE DRAWINGS FOR ADDITIONAL INFORMATION.
E11.	CONTRACTOR SHALL PROVIDE ALL ELECTRICAL CONNECTIONS, WIRING AND CONDUITS NECESSARY FOR THE INTERLOCKING OF KITCHEN EXHAUST FANS AND MAKEUP AIR UNIT THROUGH THE KITCHEN CONTROL PANEL.
E12.	WEATHER PROOF DISCONNECT SWITCH TO ARRIVE FACTORY INSTALLED ON RTU.
E13.	SATELLITE DISH PROVIDED BY VENDOR. COORDINATE EXACT LOCATION WITH SATELLITE DISH VENDOR. ROUTE SATELLITE CABLE TO NEAREST PREFAB ROOF PENETRATION. ROUTE TO OFFICE AS REQUIRED.

MECHANICAL KEYED NOTES

#	
M1.	ROUTE 1 1/2" GAS (399 MBH) DOWN TO WATER HEATER.
M2.	CONDENSATE DRAIN PIPING FROM THE HVAC UNIT SHALL BE ROUTED ON THE ROOF AS SHOWN, AT A MINIMUM PITCH OF 1/4" PER FOOT IN THE DIRECTION OF FLOW.
M3.	PROVIDE 4" PVC WATER HEATER FLUE. TERMINATE EXHAUST FLUE WITH AT LEAST A 10 FT. RADIUS FROM ANY STRUCTURAL/BUILDING ELEMENT. VERIFY MOUNTING LOCATION PRIOR TO ROUGH-IN.
M4.	ROOF MOUNTED GREASE EXHAUST FAN. MAINTAIN A MINIMUM 2' HORIZONTAL DISTANCE BETWEEN PARAPET-TYPE BUILDING STRUCTURE AND FAN DISCHARGE PER IMC2009, SECTION 506.5.5. TOP OF DISCHARGE OPENING SHALL BE HIGHER THAN STRUCTURE.
M5.	OUTSIDE AIR INTAKE. MAINTAIN A MINIMUM OF 10'-0" HORIZONTAL CLEARANCE FROM ALL PLUMBING VENTS AND EXHAUST FANS TO ANY OUTSIDE AIR INTAKE OF HVAC UNITS. MECHANICAL CONTRACTOR TO FIELD VERIFY ALL EQUIPMENT LOCATIONS.
M6.	PROVIDE A SINGLE PREFAB ROOF PENETRATION WITH SLEEVE FOR REFRIGERATION PIPING AND POWER CONDUIT(S). COORDINATE PENETRATION REQUIREMENTS WITH ARCHITECTURAL PLANS.
M7.	PROVIDE SUPPORTS FOR CONDENSING UNITS.
M8.	REMOTE CONDENSER FOR KITCHEN REFRIGERATION EQUIPMENT. REFERENCE KITCHEN DRAWINGS AND MANUFACTURER'S INSTRUCTIONS FOR INSTALLATION REQUIREMENTS.
M9.	FIELD ROUTE REFRIGERANT LINES (SEE SPECIFICATIONS) AND CONTROL WIRING AS DIRECTLY AS POSSIBLE BETWEEN CONDENSING UNITS AND DX COIL MODULE. USE REFRIGERANT GRADE PIPING AND BRAZE JOINTS. INSTALL PIPING AND CONTROLS PER MANUFACTURERS RECOMMENDATIONS, INCLUDING MAXIMUM EQUIVALENT LENGTH TO MINIMUM PIPING DIAMETER SIZING. MAINTAIN 2' MINIMUM CLEARANCE AROUND UNITS. REFER TO MAKE-UP AIR UNIT DETAIL. INSULATE REFRIGERANT PIPING PER SPECIFICATIONS. COORDINATE LOCATION WITH STRUCTURAL PLANS AND CONFIRM STRUCTURAL SUPPORT FOR EQUIPMENT SHOWN.
M10.	ALL PIPING INSTALLED ON THE ROOF SHALL BE SUPPORTED WITH PRE-MANUFACTURED ADJUSTABLE PIPE SUPPORTS AT MAXIMUM 5'-0" ON CENTER AND EVERY CHANGE OF DIRECTION.
M11.	ROUTE 1 1/2" GAS (509 MBH) DOWN TO KITCHEN EQUIPMENT.
M12.	HVAC CONDENSATE DRAIN PIPING SHALL BE ROUTED DOWN THROUGH THE ROOF TO TERMINATION BELOW. REFER TO THE PLUMBING DWV PLAN FOR CONTINUATION OF CONDENSATE DRAINAGE PIPING BELOW THE ROOF.

ENGINEER:

BRIAN E. CHANDLER, PE

6201 CAMPUS CIRCLE DRIVE E.
IRVING, TEXAS 75038
TEL: 972.870.1288
WWW.IDSTUDIO4.COM
E-MAIL: bchandler@idstudio4.com

CORPORATE:
BRINKER RESTAURANT CORPORATION,
A VIRGINIA CORPORATION
3000 OLYMPUS BLVD.
DALLAS, TEXAS 75019
972.980.9917
www.brinker.com

09/23/2024
ISSUE FOR BID
THESE DOCUMENTS ARE FOR BIDDING PURPOSES ONLY. DO NOT USE FOR CONSTRUCTION.

RESTAURANT #CH1679
PROTOTYPE 18.5FS

CHILI'S TOOELE
951 N MAIN STREET
TOOELE, UT 84074

CLIENT: BRINKER RESTAURANT CORP.
A VIRGINIA CORPORATION

DATE	DESCRIPTION
6/27/2024	ISSUE FOR PERMIT
9/23/2024	ISSUE FOR BID

	DATE	DESCRIPTION
1	08.07.2024	CITY COMMENTS

PROJECT NUMBER:
CHI24007

SHEET TITLE:
MPE ROOF PLAN

SHEET NUMBER:
MPE201

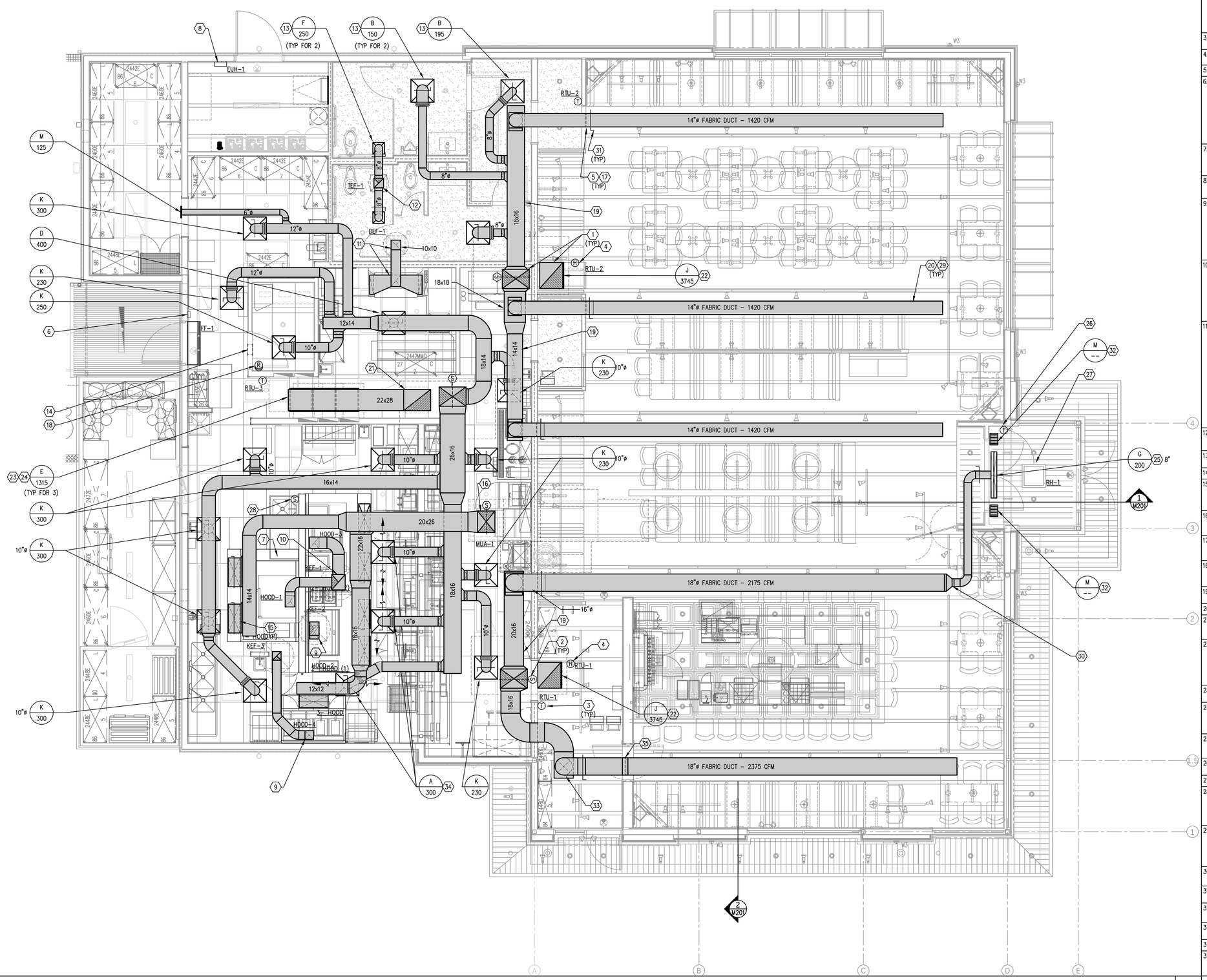

#	KEYED NOTES
1.	ROUTE FULL SIZE LINED SUPPLY AND LINED RETURN DUCTS DOWN FROM THE RTU CONNECTIONS AND TRANSITION THROUGH THE ROOF TO SIZES SHOWN. INSTALL COMPLETE WITH FLEXIBLE CONNECTIONS AT EQUIPMENT. PROVIDE 1/2" INTERNALLY LINED ACOUSTIC INSULATION FOR RETURN DUCTWORK.
2.	FACTORY INSTALLED SMOKE DETECTOR CAPABLE OF SHUTTING DOWN THE RESPECTIVE MECHANICAL UNIT UPON ACTIVATION. ACTUATION OF THE DUCT SMOKE DETECTOR SHALL INITIATE AN AUDIBLE AND VISUAL SUPERVISORY ALARM IN THE FIRE ALARM SYSTEM. DETECTOR SHALL BE UL268A LISTED AND SHALL BE INSTALLED PER NFPA 72. COORDINATE WITH FIRE ALARM CONTRACTOR/PROVIDER. REFERENCE ROOF TOP UNIT DETAIL. SMOKE DETECTOR SHALL BE FURNISHED WITH RTU PACKAGE, INSTALLED BY MECHANICAL CONTRACTOR AND POWERED BY ELECTRICAL CONTRACTOR.
3.	LOCATION OF THERMOSTAT. MOUNT 48" A.F.F. REFERENCE MECHANICAL DETAILS.
4.	LOCATION OF REMOTE HUMIDITY SENSOR. MOUNT ON JOIST NEAR RETURN AIR GRILLE.
5.	TRANSITION FROM ROUND METAL DUCT TO FABRIC DUCT.
6.	MANUAL PULL STATION FOR KITCHEN HOOD FIRE SUPPRESSION SYSTEM ACTIVATION AND GAS SUPPLY SHUT-OFF TO BE PROVIDED BY THE FIRE SUPPRESSION SUBCONTRACTOR. GENERAL CONTRACTOR SHALL PROVIDE RECESSED JUNCTION BOX AND CONDUIT FOR PULL STATION LINKAGE. FIRE SUPPRESSION SUBCONTRACTOR SHALL VERIFY APPROVED LOCATION WITH THE LOCAL AUTHORITY AND COORDINATE THE COMPLETE INSTALLATION WITH ALL OTHER TRADES. THE MANUAL ACTUATION DEVICE SHALL BE INSTALLED NOT MORE THAN 48 INCHES NOR LESS THAN 42 INCHES ABOVE THE FLOOR AND AT OR NEAR MEANS OF EGRESS. CLEARLY IDENTIFY THE HAZARD PROTECTED.
7.	FIRE SUPPRESSION CABINET TO BE FURNISHED WITH THE HOOD PACKAGE, AND INSTALLED BY THE MECHANICAL CONTRACTOR. FINAL PIPING AND LINKAGE CONNECTIONS TO BE MADE BY THE HOOD FIRE SUPPRESSION SUBCONTRACTOR.
8.	ELECTRIC UNIT HEATER SHALL BE MOUNTED ON FACTORY AVAILABLE CEILING BRACKET, AS HIGH AS POSSIBLE FOR CLEARANCE ABOVE THE DOOR JAMB. ANGLE THE DISCHARGE FACE DOWN TOWARDS THE WATER PIPING.
9.	EXTEND THE GREASE EXHAUST DUCT UP FROM THE HOOD COLLAR AND OFFSET HORIZONTALLY BEFORE ROUTING UP THRU ROOF TO THE EXHAUST FAN. HORIZONTAL DUCTWORK SHALL PITCH A MINIMUM 1/4" PER FOOT BACK TOWARDS THE HOOD. GREASE EXHAUST DUCT SHALL BE OF THE SAME SIZE AS THE HOOD COLLAR. FIELD COORDINATE THE REQUIRED TRANSITIONS OF EXHAUST DUCT FROM COMBUSTIBLE MATERIALS TO MAINTAIN THE MINIMUM CLEARANCES REQUIRED PER APPLICABLE CODE(S) AND FIRE WRAP MANUFACTURER'S INSTRUCTIONS.
10.	ROUTE DUCT FROM THE HOOD EXHAUST COLLARS AND COMBINE TO A COMMON RISER. DUCT SHALL BE SAME SIZE AS COLLAR. ROUTE THE 16X14 GREASE EXHAUST DUCT RISER UP AND OFFSET HORIZONTALLY AS SHOWN PRIOR TO EXTENDING UP THRU ROOF TO EXHAUST FAN. FIELD VERIFY ANY REQUIRED TRANSITIONS OR OFFSETS OF EXHAUST DUCT FROM COMBUSTIBLE MATERIALS TO MAINTAIN THE MINIMUM CLEARANCES REQUIRED PER APPLICABLE CODE(S) AND FIRE WRAP MANUFACTURER'S INSTRUCTIONS.
11.	'PANT LEG' DISH EXHAUST RISERS TO COMBINE BELOW CEILING TO A SINGLE 10"X10" RISER THAT EXTENDS UP TO JUST BELOW CEILING. 'PANT LEG' TRANSITION FROM THE DISHWASHER EXHAUST COLLARS, CEILING COLLARS AND COMMON RISER SECTION (UP TO CEILING) ARE PROVIDED WITH DISHWASHER AND INSTALLED BY OWNER'S KITCHEN EQUIPMENT CONTRACTOR. COORDINATE EXACT SIZE AND CONNECTIONS WITH THE KITCHEN EQUIPMENT SUPPLIER. MECHANICAL CONTRACTOR SHALL WELD 10X10 RISER EXTENSION UP AND OFFSET HORIZONTALLY AS SHOWN PRIOR TO EXTENDING UP THRU ROOF TO EXHAUST FAN. WELD SHALL BE CLEAN OF SPURS AND LAGS OF METAL. FIELD VERIFY REQUIRED TRANSITIONS OR OFFSETS OF EXHAUST DUCT FROM STRUCTURE. PITCH HORIZONTAL EXHAUST DUCT A MINIMUM OF 1/4" PER FOOT BACK TOWARDS THE HOOD. CONDENSATE EXHAUST DUCTWORK SHALL BE INSTALLED COMPLETE WITH EXTERNAL DUCT INSULATION SIMILAR TO SUPPLY DUCTWORK IN KITCHEN.
12.	EXTEND THE 10X10 RESTROOM EXHAUST RISER UP TO ROOF MOUNTED TOILET EXHAUST FAN. FIELD VERIFY ANY REQUIRED TRANSITIONS OR OFFSETS OF EXHAUST DUCT FROM STRUCTURE.
13.	AIR DEVICE IN HARD LID CEILING SHALL BE INSTALLED COMPLETE WITH OPPOSED BLADE DAMPER FOR MANUAL VOLUME ADJUSTMENT.
14.	THE OFFICE DOOR LOUVER COMES PRE-INSTALLED IN DOOR.
15.	ROUTE MAKEUP AIR DUCTWORK TO PERFORATED SUPPLY PLENUM COLLAR CONNECTION. MAKEUP AIR DUCT CONNECTION SHALL BE OF THE SAME SIZE AS THE PLENUM COLLAR. PROVIDE BALANCING DAMPERS IF NOT PROVIDED WITH HOOD PACKAGE. COORDINATE WITH EXHAUST HOOD DRAWINGS.
16.	ROUTE 22x18 MAKEUP AIR DUCTWORK DOWN FROM THE UNIT CONNECTION THROUGH THE ROOF AS SHOWN. PROVIDE FLEXIBLE CONNECTION AND TRANSITION THROUGH THE JOISTS AS REQUIRED.
17.	DUCTWORK CONCEALED BY FINISHED WALLS AND CEILINGS SHALL TRANSITION TO FABRIC DUCT ON EXPOSED SIDE OF WALL. PROVIDE A 6" OVERLAP WITH INSULATED TRANSITION ON CONCEALED SIDE.
18.	LOCATION OF (3) REMOTE DUCT SMOKE DETECTOR TEST/RESET STATIONS. MOUNT TOP STATION AT 60" A.F.F. STATIONS SHALL BE MOUNTED VERTICALLY. CONFIRM LOCATION WITH CONSTRUCTION MANAGER.
19.	INSTALL INSULATION WRAPPED DUCT TIGHT TO BOTTOM OF TRUSSES OR JOISTS.
20.	ROUTE DUCTWORK WITHIN THE VERTICAL JOIST CAVITY.
21.	THE RETURN AIR DUCT DROP FOR RTU-3 SHALL BE 22X28. DUCT SHALL BE OF SAME SIZE AS THE DROP AND STAY BETWEEN JOISTS AS HIGH AS POSSIBLE.
22.	THE RETURN AIR DUCT SHALL BE ROUTED WITHIN THE JOIST CAVITY AND THE RETURN AIR DEVICE SHALL BE MOUNTED VERTICALLY BETWEEN JOISTS AS HIGH AS POSSIBLE ON THE FACE OF THE RETURN DROP. DIFFUSER SHALL BE INSTALLED VERTICALLY WITH BLADES FACING UP TO PREVENT SEEING INTO GRILLE FROM BELOW. PAINT THE INSIDE OF EXPOSED SHEET METAL DUCT AND DIFFUSER BLACK FOR LINE OF SIGHT.
23.	COORDINATE ROUTING OF RETURN DUCTS. PROVIDE 22X22 RETURN AIR CONNECTION. NO FLEX DUCT ALLOWED FOR RETURN AIR DUCTS.
24.	RETURN GRILLE AIR QUANTITY LISTED IS FOR PARTIAL RETURN DURING STANDARD OPERATING HOURS. RETURN DUCTS ARE SIZED FOR FULL RETURN DURING NIGHT SETBACK CONDITIONS. REFER TO SHEET M402 FOR AIR BALANCE REPORT ON DESIGN AIRFLOW RATES.
25.	FIELD FABRICATED PLENUM BOX ABOVE SLOT DIFFUSER. PLENUM BOX SHALL BE TALL ENOUGH TO ALLOW ATTACHMENT OF ROUND DUCT TO BOX. PLENUM BOX SHALL BE INSULATED ON ALL SIDES.
26.	THERMOSTAT FOR RECESSED, CEILING MOUNTED HEATER. COORDINATE LOCATION WITH ARCHITECTURAL FINISHES.
27.	RECESSED CEILING MOUNTED ELECTRIC HEATER.
28.	ROOM TEMPERATURE SENSOR FURNISHED WITH THE HOOD CONTROLS PACKAGE. SENSOR SHALL BE INSTALLED IN A LOCATION WHERE IT IS FREE FROM THE INFLUENCE OF EXTERNAL HEAT SOURCES AND SHALL INDICATE AN AVERAGE KITCHEN AIR TEMPERATURE AWAY FROM APPLIANCES. THE SENSOR IS TO BE FIELD INSTALLED AND WIRED TO THE HOOD CONTROL PANEL.
29.	FABRICAIR MODEL COMBI70. SONICFLOW, FABRIC DUCT WITH TYPE B, ALL-IN-ONE SUSPENSION SYSTEM. DUCT SHALL BE COLOR #3003, DARK GRAY. PROVIDE WITH MANUFACTURE'S MOUNTING ACCESSORIES. INSTALL DUCT WHERE AIRFLOW OPENINGS ARE SYMMETRICAL DIRECTIONS ON EACH SIDE. PERFORATIONS TO BE AT 4 AND 8 O'CLOCK POSITIONS.
30.	PROVIDE FABRICAIR TRANSITION FROM 14"ø TO 8"ø FABRIC DUCT, THEN FABRICAIR TRANSITION FROM FABRIC DUCT TO METAL DUCT.
31.	PROVIDE SUPPLY AIR BALANCING DAMPERS ON THE DINING SIDE OF THE DUCT IN AN ACCESSIBLE LOCATION.
32.	TRANSFER AIR DEVICE MOUNTED IN VESTIBULE CEILING. CENTER BETWEEN WALL AND SLOT AIR DEVICE.
33.	SUPPLY AIR DUCT SHALL RUN BELOW JOIST AND THEN TURN UP AND RUN BETWEEN JOISTS IN DINING AREA.
34.	PROVIDE 2-WAY SUPPLY DIFFUSER DIRECTED AS SHOWN ON PLANS.
35.	TRANSITION FROM FABRIC DUCT TO METAL AND BACK TO FABRIC WHERE DUCT PENETRATES THE WALL. DUCT SECTION IN WALL SHALL BE METAL. PROVIDE MANUFACTURER'S AVAILABLE TRANSITION FITTINGS.

MECHANICAL FLOOR PLAN
1/4"=1'-0"
1

ENGINEER:

BRIAN E. CHANDLER, PE

6201 CAMPUS CIRCLE DRIVE E.
IRVING, TEXAS 75038
TEL: 972.870.1288
WWW.IDSTUDIO4.COM
E-MAIL: bchandler@idstudio4.com

CORPORATE:
BRINKER RESTAURANT CORPORATION,
A VIRGINIA CORPORATION
3000 OLYMPUS BLVD.
DALLAS, TEXAS 75019
972.980.9917
www.brinker.com

09/23/2024
ISSUE FOR BID
THESE DOCUMENTS ARE FOR BIDDING PURPOSES ONLY. DO NOT USE FOR CONSTRUCTION.

RESTAURANT #CH1679
PROTOTYPE 18.5FS

CHILI'S TOOELE
951 N MAIN STREET
TOOELE, UT 84074

CLIENT: BRINKER RESTAURANT CORP.
A VIRGINIA CORPORATION

DATE	DESCRIPTION
6/27/2024	ISSUE FOR PERMIT
9/23/2024	ISSUE FOR BID

△	DATE	DESCRIPTION

PROJECT NUMBER:
CHI24007

SHEET TITLE:
MECHANICAL FLOOR PLAN

SHEET NUMBER:
M101

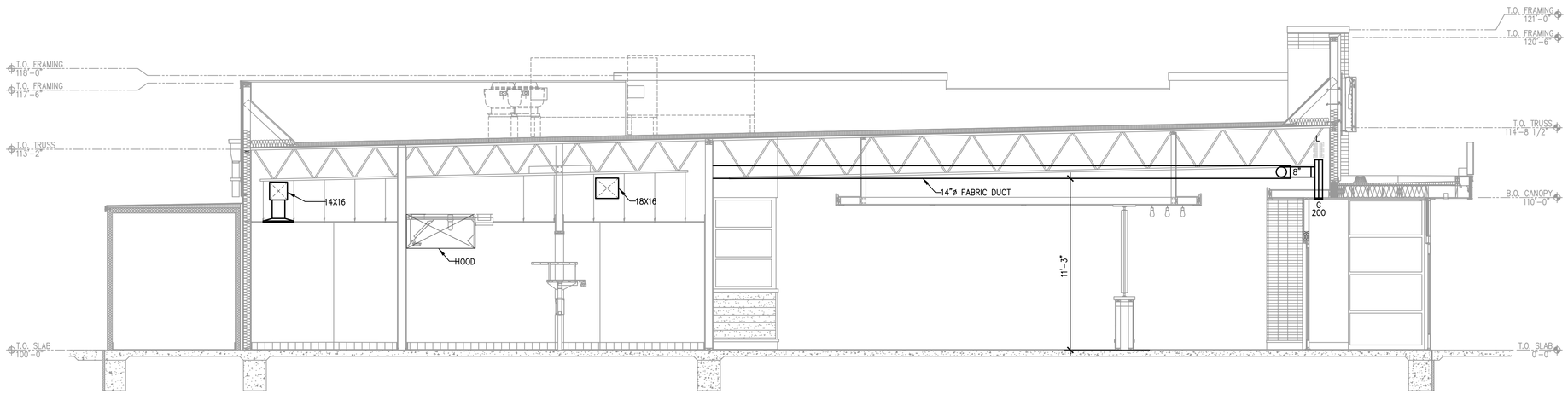

MECHANICAL BUILDING SECTION 1
1/4"=1'-0"

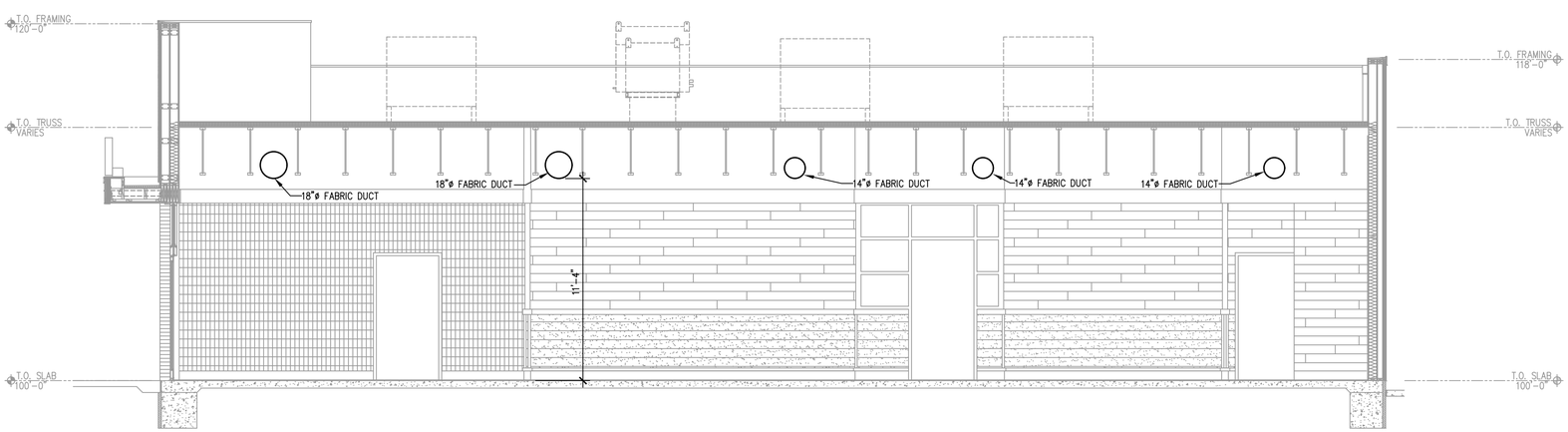

MECHANICAL BUILDING SECTION 2
1/4"=1'-0"

NOTES:
1. ALL DISHMACHINE EXHAUST DUCTWORK SHALL BE 18 GAUGE WELDED STAINLESS STEEL (UNO). MECHANICAL CONTRACTOR TO LEAK TEST THE DUCTWORK.
2. PANT LEG DUCTS, EXHAUST RISER UP TO THE CEILING, AND CEILING COLLAR SHALL BE FURNISHED WITH THE DISHMACHINE AND INSTALLED BY THE MECHANICAL CONTRACTOR.
3. ALL DISHWASH EXHAUST DUCTWORK FROM THE CEILING COLLAR TO THE EXHAUST FAN SHALL BE FURNISHED AND INSTALLED BY THE MECHANICAL CONTRACTOR.

ELECTRICAL CONTRACTOR SHALL ELECTRICALLY INTERLOCK DISHMACHINE WITH DISHMACHINE EXHAUST FAN.

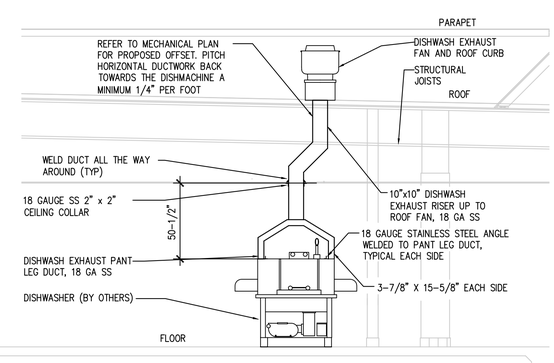

DISHMACHINE ELEVATION 3
NTS

ENGINEER:

BRIAN E. CHANDLER, PE

6201 CAMPUS CIRCLE DRIVE E.
IRVING, TEXAS 75038
TEL: 972.870.1288
WWW.IDSTUDIO4.COM
E-MAIL: bchandler@idstudio4.com

CORPORATE:
BRINKER RESTAURANT CORPORATION, A VIRGINIA CORPORATION
3000 OLYMPUS BLVD.
DALLAS, TEXAS 75019
972.980.9917
www.brinker.com

09/23/2024
ISSUE FOR BID
THESE DOCUMENTS ARE FOR BIDDING PURPOSES ONLY. DO NOT USE FOR CONSTRUCTION.

RESTAURANT #CH1679
PROTOTYPE 18.5FS

CHILI'S TOOELE
951 N MAIN STREET
TOOELE, UT 84074

CLIENT: BRINKER RESTAURANT CORP. A VIRGINIA CORPORATION

DATE	DESCRIPTION
6/27/2024	ISSUE FOR PERMIT
9/23/2024	ISSUE FOR BID

△	DATE	DESCRIPTION

PROJECT NUMBER:
CHI24007

SHEET TITLE:
MECHANICAL BUILDING SECTIONS

SHEET NUMBER:
M201

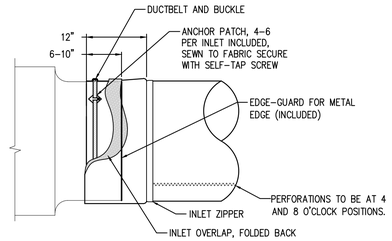

FABRIC DUCT CONNECTION 1
SCALE: NONE

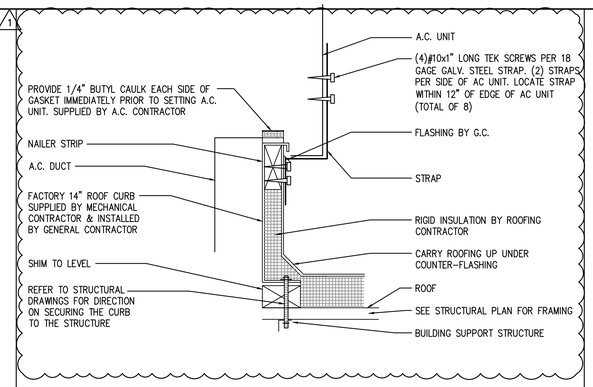

PACKAGED ROOFTOP UNIT HIGH WIND CURB BASE DETAIL 2
SCALE: NONE

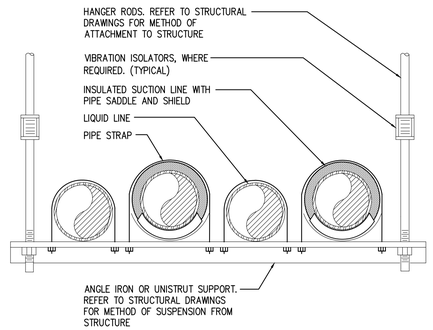

HORIZONTAL REFRIGERANT PIPE SUPPORT DETAIL 3
SCALE: NONE

NOTES:

1.) THE MECHANICAL CONTRACTOR IS RESPONSIBLE FOR PROVIDING REFRIGERANT CHARGE FOR SYSTEM.

2.) THE METHOD AND SIZE OF REFRIGERANT PIPING SHALL BE IN STRICT ACCORDANCE WITH MANUFACTURER'S ENGINEERING AND INSTALLATION RECOMMENDATIONS.

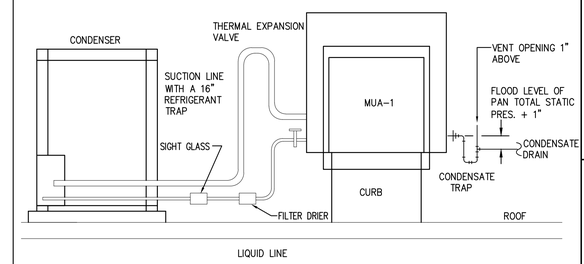

MUA DX COIL DETAIL 4
SCALE: NONE

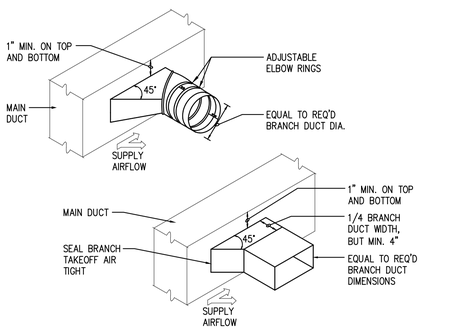

BRANCH TAKE-OFF FITTING DETAIL 5
SCALE: NONE

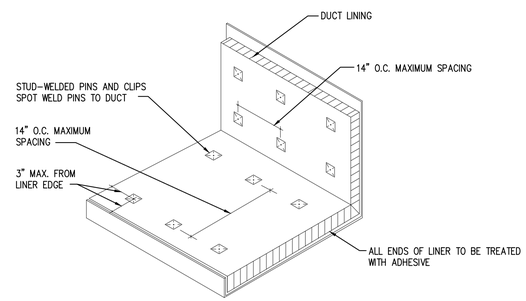

ACOUSTICAL DUCT LINER DETAIL 6
SCALE: NONE

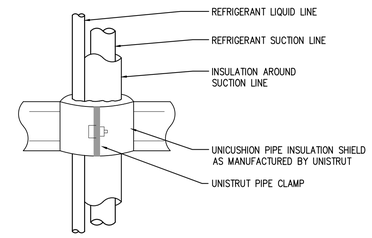

NOTES:

1.) LIQUID AND SUCTION LINES MAY BE ROUTED TOGETHER FOR CONVENIENCE, BUT MUST BE COMPLETELY INSULATED FROM EACH OTHER. DO NOT SOLDER LIQUID AND SUCTION LINES TOGETHER. DO NOT ALLOW METAL TO METAL CONTACT.

2.) LINES SHOULD BE INSTALLED WITH AS FEW BENDS AS POSSIBLE, ALLOWING SERVICE ACCESS TO THE INDOOR COIL.

3.) USE LONG RADIUS ELBOWS WHEREVER POSSIBLE, EXCEPT IN OIL RETURN TRAPS, WHERE SHORT RADIUS ELBOWS SHOULD BE USED.

4.) REFER TO MANUFACTURER'S GUIDELINES FOR THE COMPLETE INSTALLATION.

VERTICAL REFRIGERANT PIPE SUPPORT DETAIL 7
SCALE: NONE

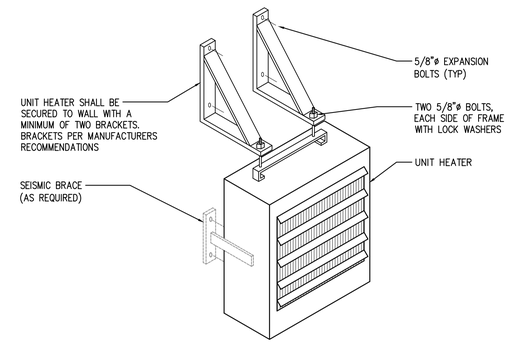

UNIT HEATER DETAIL 8
SCALE: NONE

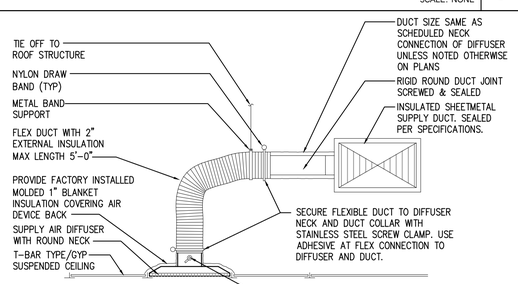

NOTES:

1. SEAL ALL JOINTS PER SPECIFICATIONS.
2. FLEX DUCT SAG LIMITED TO 1/2" PER FOOT.
3. MAX 30 DEGREES OFFSET ALLOWED IN FLEX DUCT ROUTING.

SUPPLY DUCT TAKE-OFF DETAIL 9
SCALE: NONE

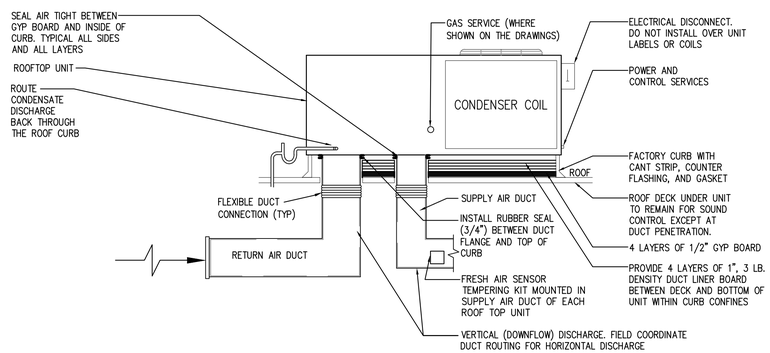

ROOFTOP UNIT DETAIL 10
SCALE: NONE

SEISMIC BRACING AND SIZING

BRACE SIZING		BRACING SPACING		
BRACE SIZE	MAXIMUM LENGTH	PIPE SIZE	MAXIMUM HANGER SPACING	MAXIMUM BRACE SPACING* (SEE NOTE 2)
2"x2"x3/16" ANGLE	6'–0"	UP TO 1–1/2"	7'–0"	NOT REQUIRED
2–1/8"x2–1/8"x3/16" ANGLE	8'–0"	2"	10'–0"	NOT REQUIRED
3"x3"x3/16" ANGLE	10'–0"	2–1/2" TO 3"	10'–0"	7'–0"
3–1/2"x3–1/2"x1/4" ANGLE	11'–6"	4" AND UP	10'–0"	10'–0"
4"x4"x1/4" ANGLE	13'–0"			
3" DIAM. PIPE	13'–0" TO 18'–0"			

NOTES:

1. DUCTS WHICH ARE LARGER THAN 6 SQUARE FEET IN CROSS SECTION AREA SHALL BE BRACED LATERALLY 7'–0" ON CENTERS WITH 2" x 2" x 3/16" ANGLE.
2. * BRACING CAN BE OMITTED ON ALL PIPING SUSPENDED BY INDIVIDUAL HANGERS 12" OR LESS IN LENGTH FROM THE TOP OF PIPE TO THE BOTTOM OF THE SUPPORT FOR THE HANGER.
3. MECHANICAL SERVICES CEILING MOUNTED AIR TERMINALS OR SERVICES WEIGHING LESS THAN 20 POUNDS SHALL BE POSITIVELY ATTACHED TO THE MAIN RUNNER. TERMINALS OR SERVICES WEIGHING BETWEEN 20 POUNDS AND 56 POUNDS SHALL ALSO HAVE TWO NO. 12 GAUGE HANGER WIRES CONNECTED FORM THE TERMINAL TO THE STRUCTURE ABOVE. THESE WIRES MAY BE SLACK.

SEISMIC BRACING AND SIZING 14
SCALE: NONE

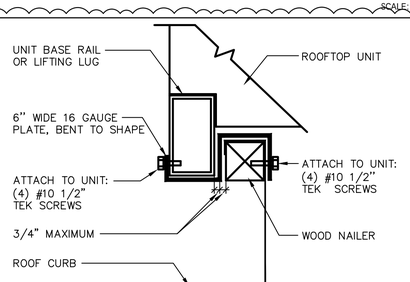

NOTES:

1. USE A MINIMUM OF (1) PLATE PER SIDE OF UNIT.
2. PLATE MUST BE PAINTED WHERE IT CONTACTS RAIL.
3. USE (8) SCREWS TO SECURE PLATE, NO SMALLER THAN #10x1/2"
4. CONTRACTOR IS RESPONSIBLE FOR VERIFICATION OF, AND COMPLIANCE WITH, ALL LOCAL CODES REGARDING SEISMIC RESTRAINTS.

VERTICAL/HORIZNTAL SEISMIC BRACING DETAIL 11
SCALE: NONE

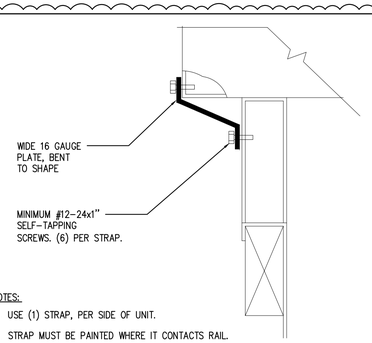

NOTES:

1. USE (1) STRAP, PER SIDE OF UNIT.
2. STRAP MUST BE PAINTED WHERE IT CONTACTS RAIL.
3. CONTRACTOR IS RESPONSIBLE FOR VERIFICATION OF, AND COMPLIANCE WITH, ALL LOCAL CODES REGARDING SEISMIC RESTRAINTS.

HORIZNTAL SEISMIC BRACING DETAIL 12
SCALE: NONE

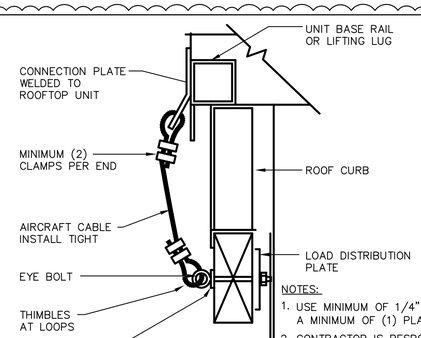

NOTES:

1. USE MINIMUM OF 1/4" DIAMETER CABLE, AT A MINIMUM OF (1) PLACE PER SIDE OF UNIT.
2. CONTRACTOR IS RESPONSIBLE FOR VERIFICATION OF, AND COMPLIANCE WITH, ALL LOCAL CODES REGARDING SEISMIC RESTRAINTS.

VERTICAL SEISMIC BRACING DETAIL 13
SCALE: NONE

ENGINEER:

BRIAN E. CHANDLER, PE

6201 CAMPUS CIRCLE DRIVE E.
IRVING, TEXAS 75038
TEL: 972.870.1288
WWW.IDSTUDIO4.COM
E-MAIL: bchandler@idstudio4.com

CORPORATE:
BRINKER RESTAURANT CORPORATION, A VIRGINIA CORPORATION
3000 OLYMPUS BLVD.
DALLAS, TEXAS 75019
972.980.9917
www.brinker.com

09/23/2024
ISSUE FOR BID
THESE DOCUMENTS ARE FOR BIDDING PURPOSES ONLY. DO NOT USE FOR CONSTRUCTION.

RESTAURANT #CH1679
PROTOTYPE 18.5FS

CHILI'S TOOELE
951 N MAIN STREET
TOOELE, UT 84074

CLIENT: BRINKER RESTAURANT CORP.
A VIRGINIA CORPORATION

DATE	DESCRIPTION
6/27/2024	ISSUE FOR PERMIT
9/23/2024	ISSUE FOR BID

	DATE	DESCRIPTION
1	08.07.2024	CITY COMMENTS

PROJECT NUMBER:
CHI24007

SHEET TITLE:
MECHANICAL DETAILS

SHEET NUMBER:
M301

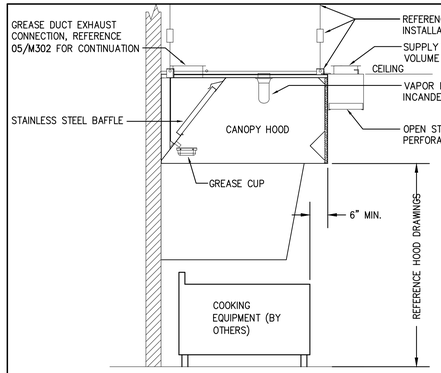

EXHAUST HOOD DETAIL 1
SCALE: NONE

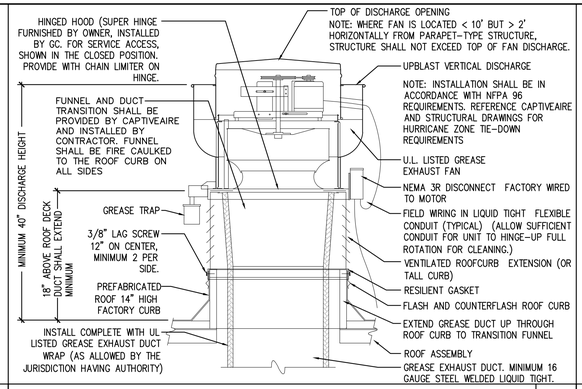

KITCHEN UPBLAST EXHAUST FAN DETAIL 2
SCALE: NONE

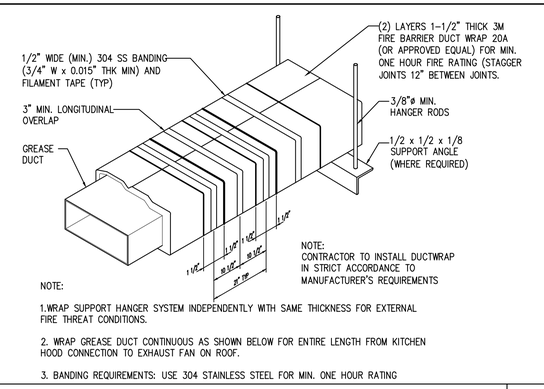

NOTE:

1.WRAP SUPPORT HANGER SYSTEM INDEPENDENTLY WITH SAME THICKNESS FOR EXTERNAL FIRE THREAT CONDITIONS.

2. WRAP GREASE DUCT CONTINUOUS AS SHOWN BELOW FOR ENTIRE LENGTH FROM KITCHEN HOOD CONNECTION TO EXHAUST FAN ON ROOF.

3. BANDING REQUIREMENTS: USE 304 STAINLESS STEEL FOR MIN. ONE HOUR RATING

UL LISTED GREASE EXHAUST DUCT WRAP DETAIL 3
SCALE: NONE

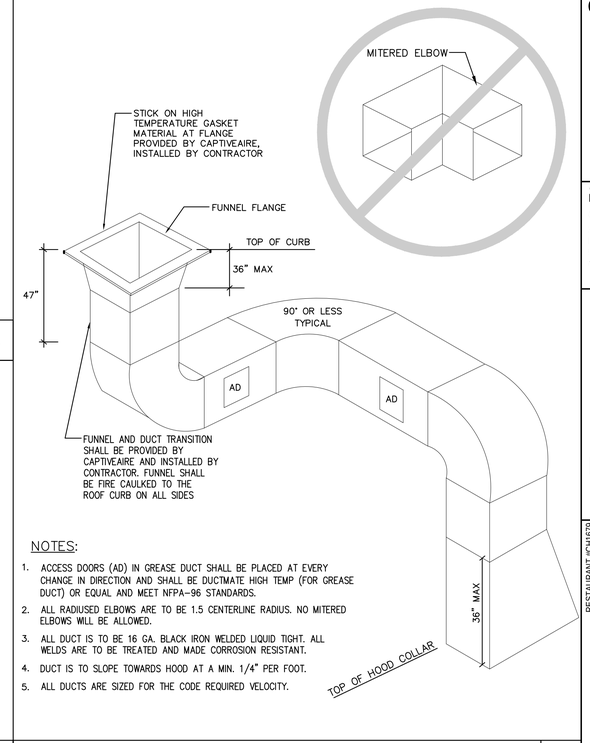

NOTES:

1. ACCESS DOORS (AD) IN GREASE DUCT SHALL BE PLACED AT EVERY CHANGE IN DIRECTION AND SHALL BE DUCTMATE HIGH TEMP (FOR GREASE DUCT) OR EQUAL AND MEET NFPA-96 STANDARDS.
2. ALL RADIUSED ELBOWS ARE TO BE 1.5 CENTERLINE RADIUS. NO MITERED ELBOWS WILL BE ALLOWED.
3. ALL DUCT IS TO BE 16 GA. BLACK IRON WELDED LIQUID TIGHT. ALL WELDS ARE TO BE TREATED AND MADE CORROSION RESISTANT.
4. DUCT IS TO SLOPE TOWARDS HOOD AT A MIN. 1/4" PER FOOT.
5. ALL DUCTS ARE SIZED FOR THE CODE REQUIRED VELOCITY.

GREASE DUCT DETAIL 7
SCALE: NONE

NOT USED 4
SCALE: NONE

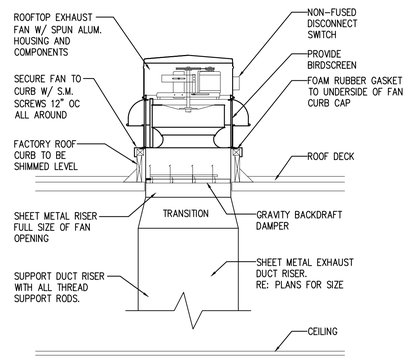

RESTROOM DOWNBLAST EXHAUST FAN DETAIL 5
SCALE: NONE

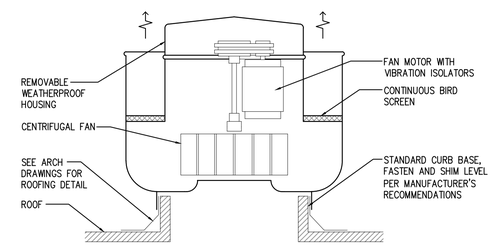

DISHMACHINE UPBLAST EXHAUST FAN DETAIL 6
SCALE: NONE

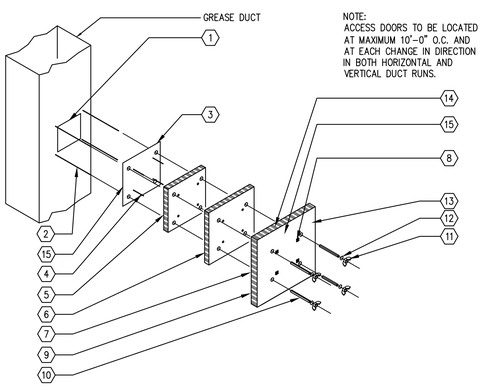

ACCEPTABLE OPTIONS FOR UL1978 LISTED DUCT ACCESS DOORS AND ASTM 2336 LISTED ENCLOSURE COVER PLATES AND FIRE WRAP

1. FYREWRAP ELITE 1.5 WITH DUCTMATE ULTIMATE ACCESS DOORS KIT (WITH UL DOOR WITH INSULATION KIT. OUTER PLATES AND HARDWARE). SHOWN.

PLEASE NOTE: CARE SHOULD BE TAKEN IN CONSTRUCTION, TO EASILY IDENTIFY THE OPENING LOCATION BENEATH THE DUCT WRAP LAYERS.

FOLLOW SPECIFIC MANUFACTURER'S INSTRUCTIONS PROVIDED WITH BOTH THE ACCESS DOOR KITS AND WRAP. CONTACT MANUFACTURER WITH QUESTIONS REGARDING INSTALLATION.

LEGEND	
1	ACCESS DOOR OPENING
2	ALL THREAD RODS
3	ACCESS DOOR COVER PANEL 16 GAUGE (FIELD FAB. ONLY)
4	INSULATION PINS – WELDED TO COVER
5	FIRST LAYER FYREWRAP ELITE 1.5
6	SECOND LAYER FYREWRAP ELITE 1.5 – 1" OVERLAP
7	THIRD LAYER FYREWRAP ELITE 1.5 – 1" OVERLAP
8	SPEED CLIPS/WASHERS
9	CUT EDGES SEALED WITH ALUMINUM FOIL TAPE
10	SPOOL PIECES FOR THREADED RODS (OPTIONAL FIELD FAB. ONLY)
11	WING NUTS
12	WASHERS
13	INSULATION PLATE
14	UNFACED FYREWRAP BLANKET OR CERAMIC FIBER GASKET, 1/2" THICK
15	PREFABRICATED ACCESS DOOR.

FOR INFORMATIONAL PURPOSES ONLY – USE INSTALLATION DETAILS PROVIDED WITH EQUIPMENT PURCHASED FOR INSTALLATION.

GREASE DUCT ACCESS DOOR DETAIL 8
SCALE: NONE

NOT USED 9
SCALE: NONE

NOT USED 10
SCALE: NONE

NOT USED 11
SCALE: NONE

NOT USED 12
SCALE: NONE

ENGINEER:

BRIAN E. CHANDLER, PE

6201 CAMPUS CIRCLE DRIVE E.
IRVING, TEXAS 75038
TEL: 972.870.1288
WWW.IDSTUDIO4.COM
E-MAIL: bchandler@idstudio4.com

CORPORATE:
BRINKER RESTAURANT CORPORATION, A VIRGINIA CORPORATION
3000 OLYMPUS BLVD.
DALLAS, TEXAS 75019
972.980.9917
www.brinker.com

09/23/2024
ISSUE FOR BID
THESE DOCUMENTS ARE FOR BIDDING PURPOSES ONLY. DO NOT USE FOR CONSTRUCTION.

RESTAURANT #CH1679
PROTOTYPE 18.5FS

CHILI'S TOOELE
951 N MAIN STREET
TOOELE, UT 84074

CLIENT: BRINKER RESTAURANT CORP.
A VIRGINIA CORPORATION

DATE	DESCRIPTION
6/27/2024	ISSUE FOR PERMIT
9/23/2024	ISSUE FOR BID

△	DATE	DESCRIPTION

PROJECT NUMBER:
CHI24007

SHEET TITLE:
MECHANICAL DETAILS

SHEET NUMBER:
M302

MECHANICAL GENERAL NOTES

1. NOTE: FOR THE PURPOSE OF CLEARNESS AND LEGIBILITY, THE DRAWINGS ARE ESSENTIALLY DIAGRAMMATIC AND ALTHOUGH SIZES AND LOCATIONS OF EQUIPMENT ARE DRAWN TO SCALE WHEREVER POSSIBLE, THE CONTRACTOR SHALL MAKE USE OF ALL DATA IN ALL OF THE CONTRACT DOCUMENTS AND VERIFY THIS INFORMATION PRIOR TO ORDERING, FABRICATING OR INSTALLING ANY MATERIALS.
2. THE MECHANICAL CONTRACTOR SHALL PROVIDE COMPLETE INFORMATION AND COOPERATE WITH THE OTHER CONTRACTORS AND TRADES AS REQUIRED FOR THE COMPLETION AND COORDINATION OF THE COMPLETE PROJECT.
3. THE MECHANICAL CONTRACTOR SHALL BE RESPONSIBLE FOR ADMINISTERING ALL WARRANTIES ON EQUIPMENT WHICH THEY FURNISH AND INSTALL.
4. PROVIDE WRITTEN WARRANTY TO REPLACE ALL FAULTY MATERIALS AND/OR LABOR, AT NO COST TO TENANT, FOR A PERIOD OF ONE YEAR FROM DATE OF ACCEPTANCE.
5. ALL OUTDOOR AIR INTAKE BY MECHANICAL EQUIPMENT SHALL HAVE A MINIMUM 10'-0" HORIZONTAL CLEARANCE FROM THE DISCHARGE OF ANY EXHAUST FAN, RTU GAS EXHAUST OR PLUMBING VENT.
6. PROVIDE VIBRATION ISOLATION DEVICES AND FLEXIBLE DUCT/ PIPING CONNECTIONS TO ALL MOVING MACHINERY NOT INTERNALLY ISOLATED.
7. CONTRACTOR SHALL PROVIDE ALL EQUIPMENT AND DEVICES FOR COMPLETE AND FULLY OPERATIONAL SYSTEMS, UNLESS SPECIFICALLY NOTED AS FURNISHED BY OTHERS. ALL EQUIPMENT USED ON THIS PROJECT IS TO BE UL LISTED AND BEAR THE UL 710 LISTED LABEL.
8. THE MECHANICAL CONTRACTOR SHALL COORDINATE ALL DUCT AND DIFFUSER LOCATIONS WITH SPRINKLER PIPING, SPRINKLER HEADS AND LIGHT FIXTURES AS REQUIRED FOR A COMPLETE INSTALLATION.
9. THE MECHANICAL CONTRACTOR SHALL COORDINATE WITH THE GENERAL CONTRACTOR AND OTHER TRADES ALL REQUIRED OPENINGS AND PENETRATIONS. ALL REQUIRED OPENINGS IN FOUNDATIONS, FLOORS, WALLS AND ROOF SHALL BE CONSTRUCTED INTO THE STRUCTURE WITH THE USE OF SLEEVES, CURBS, ETC TO COMPLY WITH RESPECTIVE BUILDING CODE REQUIREMENTS. CUTTING AND PATCHING SHALL BE HELD TO A MINIMUM. UNLESS OTHERWISE SPECIFIED, ALL REQUIRED CUTTING AND PATCHING OF FLOORS, WALLS, PARTITIONS AND OTHER MATERIALS IN THE BUILDING IS TO BE INCLUDED IN THE SCOPE. THE CONTRACTOR SHALL RESTORE THESE AREAS TO ORIGINAL CONDITION UPON COMPLETION. ALL PENETRATIONS THROUGH FIRE RATED WALL SHALL COMPLY WITH UL LISTED SLEEVE ASSEMBLY REQUIREMENTS.
10. ALL ITEMS PROJECTING THROUGH THE ROOF SHALL BE FLASHED THROUGH CURBS OR PIPE SEALS A MINIMUM OF 12" ABOVE THE ROOF. THE PIPE CURBS AND SEALS SHALL BE INSTALLED BY THE ROOFING CONTRACTOR. ENSURE THAT AMPLE ROOF OPENINGS ARE PROVIDED TO ACCOMMODATE ANY ELECTRICAL CONDUIT PENETRATIONS REQUIRED FOR POWER. COMPLY WITH THE OWNER/LANDLORD AND THE OWNER'S/LANDLORD'S ROOFING CONTRACTOR TO MAINTAIN ROOF WARRANTY.
11. COORDINATE THE INSTALLATION AND FINISH OF ALL SUPPLY AND RETURN AIR DEVICES. AIR DEVICES LOCATED IN GUEST AREAS (INCLUDING DINING AND BAR) SHALL BE PAINTED PER THE ARCHITECTURAL DRAWINGS FINISH SCHEDULE. ALL INTERIOR FACES OF DUCTWORK BEHIND RETURN AIR GRILLES SHALL BE PAINTED FLAT BLACK FOR LINE OF SIGHT.
12. CONTRACTOR SHALL REFER TO GENERAL MEP NOTES APPLICABLE TO ALL PLANS. GENERAL NOTES FROM THIS LIST SHALL APPLY TO THE ENTIRE MECHANICAL DESIGN.
13. COORDINATE ALL WORK INDICATED WITH ALL OTHER TRADES INVOLVED IN THIS PROJECT, AS NECESSARY: IT IS THE RESPONSIBILITY OF THE CONTRACTOR TO VERIFY DIMENSIONS, WORKING CLEARANCES, AND THE WORKING ARRANGEMENT OF EQUIPMENT, AS WELL AS THE LOCATIONS OF THE EQUIPMENT, AND ASSOCIATED DUCTWORK, PIPING, ETC., AND TO COORDINATE THE INSTALLATION ACCORDINGLY.
15. ROOFTOP UNITS SHALL BE SET TO RUN IN "FAN CONTINUOUS" MODE DURING OCCUPIED HOURS. DURING NIGHT SET-BACK HOURS, THE ROOFTOP UNITS SHALL RUN IN "FAN AUTO" MODE.
16. MECHANICAL CONTRACTOR SHALL FURNISH AND INSTALL 4" HIGH BLACK OVER WHITE LAMINATE NAMEPLATE WITH 2" LETTERS VISIBLE ADJACENT TO DISCONNECT SWITCH FOR ROOFTOP UNITS AND ROOF MOUNTED FANS.
17. LINE VOLTAGE WIRING, ALL CONDUIT DISCONNECT SWITCHES AND FINAL CONNECTION BY ELECTRICAL CONTRACTOR. LOW VOLTAGE CONDUIT AND WIRING AND FINAL CONNECTION BY MECHANICAL CONTRACTOR.
18. HVAC WORK SHALL INCLUDE FURNISHING (EXCEPT WHERE NOTED), INSTALLING, AND TESTING ALL HVAC SYSTEMS FOR A COMPLETE, FULLY OPERATIONAL, AND CODE COMPLIANT INSTALLATION INCLUDING, BUT NOT LIMITED TO:
   - MANUFACTURER'S STANDARD ROOF CURBS OR AS SPECIFIED,
   - ROOF OPENINGS,
   - DUCTWORK, TURNING VANES, SPLITTERS, DAMPERS, SPIN-INS, ETC. IN ACCORDANCE WITH SMACNA STANDARDS FOR LOCATION, THICKNESS, AND CONSTRUCTION,
   - DIFFUSERS, SUPPLY AND RETURN GRILLES
   - LINE SETS, AUXILIARY DRAIN PANS AND PIPING, AND FRESH AIR INTAKE FOR EACH AIR HANDLER IN SPLIT SYSTEMS (IF USED),
   - CONTROLS, SENSORS, AND LOW VOLTAGE WIRING (E.G. 8-STRAND, 18 AWG. NON-SHIELDED CABLE),
   - SHIMS AND MISCELLANEOUS STEEL FOR LEVEL INSTALLATION AND PROPER CONDENSATE DRAINAGE,
   - SMOKE DETECTORS IN RETURN AIR DUCTS OR SUPPLY DUCTS AS REQUIRED BY LOCAL CODE,
   - WEATHER-PROOF ROOF AND WALL PENETRATIONS FOR COPPER PIPING, MAKE-UP AIR, PADS.
19. ALL PENETRATIONS IN FIRE RATED WALL ASSEMBLIES SHALL BE SEALED WITH UL LISTED FIRE STOPPING MATERIAL. FIRE DAMPERS MUST BE INSTALLED AT ALL LOCATIONS WHERE DUCT PENETRATES A FIRE RATED WALL. PROVIDE SMOKE/FIRE DAMPERS FOR AN EGRESS WHERE REQUIRED. PROVIDE ACCESS DOORS AS REQUIRED. FIRE DAMPERS TO BE OF TYPE APPROVED BY THE AGENCIES HAVING JURISDICTION.
20. SUBMITTALS: THE CONTRACTOR SHALL SUBMIT INFORMATION TO THE OWNER FOR ALL EQUIPMENT, DEVICES, AND PIPING COMPONENTS INTENDED TO BE PROVIDED FOR THIS PROJECT.
21. THE CONTRACTOR SHALL KEEP ALL EQUIPMENT AND MATERIALS, AND ALL PARTS OF THE BUILDING, EXTERIOR SPACES AND ADJACENT STREETS, SIDEWALKS AND PAVEMENTS, FREE FROM MATERIAL AND DEBRIS RESULTING FROM THE EXECUTION OF THIS WORK. EXCESS MATERIALS WILL NOT BE PERMITTED TO ACCUMULATE EITHER ON THE INTERIOR OR THE EXTERIOR.
22. ALL GREASE EXHAUST FAN ROOF CURBS SHALL BE VENTED PER NFPA 96. PROVIDE REQUIRED ACCESS FOR SERVICING AND CLEANING, AND VERIFY THE HINGED CURB OPENING OPERATES PROPERLY.
23. ROOF CURBS FOR EXHAUST FANS AND THE MAKEUP AIR UNIT SHALL BE FACTORY FABRICATED AND FURNISHED WITH THE HOOD PACKAGE. VERIFY REQUIREMENTS FOR THE ROOF CURBS WITH THE EQUIPMENT SUPPLIER. THE GENERAL CONTRACTOR SHALL FLASH ROOF CURBS AND SHIM DEAD LEVEL. COORDINATE EXACT SIZE AND LOCATION OF ROOF OPENINGS WITH THE STRUCTURAL FRAMING. CUTTING OF STRUCTURAL MEMBERS IS NOT PERMITTED.
24. ROOF CURBS FOR ROOFTOP UNITS SHALL BE FACTORY FABRICATED OF FULL WELDED STEEL CONSTRUCTION WITH WOOD NAILER, AND FURNISHED WITH THE HVAC EQUIPMENT PACKAGE. VERIFY REQUIREMENTS FOR THE ROOF CURBS WITH THE EQUIPMENT SUPPLIER. THE GENERAL CONTRACTOR SHALL FIELD ASSEMBLE THE ROOF CURBS, FLASH AND SHIM DEAD LEVEL. COORDINATE EXACT SIZE AND LOCATION OF ROOF OPENINGS WITH THE STRUCTURAL FRAMING. CUTTING OF STRUCTURAL MEMBERS IS NOT PERMITTED.
25. THE KITCHEN EXHAUST HOODS SHALL BE INSTALLED AT 6'-8" AFF (UNO). COORDINATE THE INSTALLATION AND PLACEMENT OF THE EXHAUST HOODS WITH THE ARCHITECTURAL REFLECTED CEILING PLAN.
26. THE KITCHEN HOOD PACKAGE WILL BE PROVIDED WITH UTILITY END CABINETS HOUSING THE FIRE SUPPRESSION TANKS, ELECTRICAL PREWIRE PACKAGE, HOOD EXHAUST FAN SWITCHES, AND LIGHT SWITCHES.
27. ALL CONSTRUCTION DEBRIS TO BE REMOVED UNDER THIS CONTRACT SHALL BECOME THE PROPERTY OF THE CONTRACTOR WITH THE EXCEPTION OF SPECIFIC EQUIPMENT AND APPARATUS REQUESTED BY THE BUILDING REPRESENTATIVE. ARCHITECT OR AS NOTED TO BE RELOCATED ON THE DRAWINGS SHALL BE PROPERLY DISPOSED OF BY THIS CONTRACTOR.
28. REFER TO MANUFACTURER SHEETS FOR THE HOOD CONTROL WIRING DIAGRAM FOR OPERATION OF THE KITCHEN HOOD EQUIPMENT.
29. CONTRACTOR SHALL NOT OPERATE A/C UNITS WITHOUT CONSTRUCTION FILTERS IN PLACE. THE MECHANICAL CONTRACTOR SHALL BE RESPONSIBLE FOR REPLACING THE AIR FILTERS AT THE ROOFTOP UNITS WITH 2" THICK PLEATED MERV 8 THROW AWAY TYPE AIR FILTERS AT THE COMPLETION OF CONSTRUCTION AND PRIOR TO AIR BALANCE AND STORE TURNOVER.
30. PER 2021 INTERNATIONAL MECHANICAL CODE, WITH LOCAL AMENDMENTS WHEN REQUIRED, EACH SINGLE SYSTEM PROVIDING HEATING OR COOLING AIR IN EXCESS OF 2000 CUBIC FEET PER MINUTE SHALL BE EQUIPPED WITH AN AUTOMATIC SHUTOFF. AUTOMATIC SHUTOFF SHALL BE ACCOMPLISHED BY INTERRUPTING THE POWER SOURCE OF THE AIR MOVING EQUIPMENT DEVICES WHICH WILL DETECT PRODUCTS OF COMBUSTION OTHER THAN HEAT, AND WHICH COMPLY WITH THE IJBC, SHALL BE LABELED BY AN APPROVED AGENCY FOR AIR DUCT INSTALLATION AND SHALL BE INSTALLED IN ACCORDANCE WITH THE MANUFACTURER'S INSTALLATION INSTRUCTIONS. SUCH DEVICES SHALL BE COMPATIBLE WITH THE OPERATING VELOCITIES, PRESSURES, TEMPERATURES AND HUMIDITIES OF THE SYSTEM WHERE FIRE DETECTION OR ALARM SYSTEMS ARE PROVIDED FOR THE BUILDING, SMOKE DETECTORS SHALL BE SUPERVISED BY SUCH SYSTEMS.
31. MECHANICAL CONTRACTOR SHALL BE ON SITE AND PRESENT AT THE DATE OF STORE TURNOVER.
32. CONTRACTOR SHALL COVER ALL HVAC UNITS, ALL RELATED DISTRIBUTION EQUIPMENT AND ALL DUCT OPENINGS DURING STORAGE AT CONSTRUCTION SITE AND AT THE TIME OF ROUGH INSTALLATION UNTIL FINAL STARTUP TO PREVENT DIRT, DEBRIS, CONSTRUCTION DUST, AND MOISTURE FOR ENTERING.
33. REMOVABLE ACCESS TILE AND/OR ACCESS DOOR ARE REQUIRED IN HUNG CEILINGS, SHAFTS AND WALLS FOR ALL VOLUME AND FIRE DAMPERS. AUTOMATIC DAMPERS AND ALL OTHER MECHANICAL EQUIPMENT AND DEVICES. HVAC CONTRACTOR TO FURNISH ACCESS LOCATION REQUIREMENTS TO GENERAL CONTRACTOR. ACCESS TILE IDENTIFICATION: PROVIDE BUTTONS, TABS, AND MARKERS TO IDENTIFY LOCATION OF CONCEALED DAMPERS AND EQUIPMENT.
34. THERMOSTATS AND HUMIDITY SENSORS SHALL BE PROVIDED WITH NEW COOLING AND HEATING EQUIPMENT. DO NOT INSTALL THERMOSTATS OR SENSORS CLOSE TO HEAT AND/OR STEAM PRODUCING APPLIANCES.
35. CONTRACTOR SHALL INSULATE SUPPLY GRILLES/DIFFUSERS IN THE PLENUM SIDE TO PREVENT CONDENSATION OR PROVIDE INSULATED SUPPLY GRILLES/DIFFUSERS.
36. THE FINAL ACCEPTANCE WILL BE MADE AFTER THE CONTRACTOR HAS ADJUSTED THE EQUIPMENT, BALANCED THE SYSTEMS, DEMONSTRATED THAT THE PROJECT FULFILLS THE REQUIREMENTS OF THE DRAWINGS AND SPECIFICATIONS AND HAS FURNISHED ALL THE REQUIRED CERTIFICATES OF INSPECTION AND APPROVAL TO THE ARCHITECT/OWNER.
37. THE MECHANICAL CONTRACTOR SHALL TIE DIFFUSERS BACK TO BAR JOISTS AS REQUIRED BY LOCAL GOVERNING CODES.
38. CONTRACTOR SHALL NOT LOCATE ANY FRESH AIR INTAKE AND MAKE-UP AIR INTAKE WITHIN TEN (10) FEET OF ANY EXHAUST OR VENT DISCHARGE.
39. CONTRACTOR SHALL FURNISH EQUIPMENT DISCONNECTS WHERE THEY ARE NOT FURNISHED BY EQUIPMENT MANUFACTURER. CONTRACTOR SHALL INSTALL ALL DISCONNECTS AND MAKE FINAL CONNECTION.
40. SEAL OPENINGS AROUND DUCTS AND PIPING THROUGH PARTITIONS, WALLS AND FLOORS (NOT IN SHAFTS) WITH MINERAL WOOL OR OTHER NONCOMBUSTIBLE MATERIAL.
41. CONTRACTOR SHALL DEVELOP AND MAINTAIN A SET OF RED-LINED "AS BUILT" DRAWINGS AT THE PROJECT CONSTRUCTION SITE AND MADE AVAILABLE TO THE ARCHITECT/ENGINEER UPON REQUEST. RED-LINED DRAWINGS MUST BE KEPT CURRENT AND REFLECT ALL ACTUAL ASPECTS OF THE INSTALLATION THAT DEVIATE FROM RECORD DESIGN DRAWINGS. RED-LINED DRAWINGS SHALL INCLUDE ALL PUNCH-LIST ITEMS AND TESTING, AND SHALL BE SUBMITTED TO THE ARCHITECT/ENGINEER AT THE COMPLETION OF THE PROJECT.
42. CONTRACTOR SHALL CAREFULLY INSPECT ALL EQUIPMENT RECEIVED AND VERIFY THAT IT IS COMPATIBLE WITH MECHANICAL, ELECTRICAL AND PLUMBING SYSTEMS PRIOR TO INSTALLING EQUIPMENT. CONTACT ARCHITECT OR ENGINEER FOR DIRECTION IF ANY SIGNIFICANT DISCREPANCY ARISES.
43. ALL MATERIAL AND EQUIPMENT SHALL FIT IN THE SPACE AVAILABLE: ALL DIMENSIONS AND CLEARANCES SHALL BE VERIFIED AT THE FACILITY BEFORE COMMENCING WORK. ALL WORKING CLEARANCES AROUND EQUIPMENT SHALL BE MAINTAINED IN ACCORDANCE WITH THE MANUFACTURER'S REQUIREMENTS.
44. INSTALL WORK SO AS TO BE READILY ACCESSIBLE FOR OPERATION, MAINTENANCE AND REPAIR. MINOR DEVIATIONS FROM DRAWINGS MAY BE MADE TO ACCOMPLISH THIS, BUT CHANGES WHICH INVOLVE EXTRA COST SHALL NOT BE MADE WITHOUT APPROVAL.
45. CONTRACTOR SHALL USE EXTREME CARE IN SELECTION AND MOUNTING METHODS FOR INSTALLATION OF EQUIPMENT TO INSURE THAT NOISE AND VIBRATION ARE HELD TO A MINIMUM. USE VIBRATION ISOLATORS, SPRINGS, DAMPENING MATERIALS, ETC. WHERE REQUIRED. ON MOTOR DRIVEN SYSTEMS EXCEEDING 1/2 HP, PROVIDE VIBRATION ISOLATION AS RECOMMENDED BY THE EQUIPMENT MANUFACTURER OR EQUAL TO KINETICS NOISE CONTROL WHERE NO RECOMMENDATION IS MADE.
46. REFER TO ARCHITECT'S SPECIFICATIONS AND NOTES FOR CUTTING, TRENCHING AND PATCHING. PAINT ALL CONDUIT, PIPING, DUCTS AND DEVICES EXPOSED TO PUBLIC PER ARCHITECTURAL PLANS OR TO MATCH ADJACENT BUILDING SURFACE, UNLESS NOTED OTHERWISE.
47. CONTRACTOR SHALL INCLUDE AND GUARANTEE FULL MAINTENANCE AND EMERGENCY SERVICE CALLS AGAINST DEFECTIVE MATERIALS AND WORKMANSHIP FOR A PERIOD OF ONE YEAR FROM FINAL ACCEPTANCE OF FACILITY ON ALL FURNISHED EQUIPMENT AND DEVICES, CONTRACTOR'S INSTALLATION. THIS SHALL INCLUDE COST OF LABOR AND MATERIALS REQUIRED FOR REPLACEMENT OF DEFECTIVE PARTS OR IMPROPER WORKMANSHIP TO INSURE CONTINUOUS OPERATION OF ALL SYSTEMS.
48. CONTRACTOR SHALL COLLECT AND FURNISH TO OWNER ALL OPERATIONS AND MAINTENANCE MANUALS FOR INSTALLED EQUIPMENT AS WELL AS WARRANTIES AND GUARANTEES FOR SAME. TURN OVER PRIOR TO REQUESTING FINAL PAYMENT.
49. UPON COMPLETETION OF WORK, PRIOR TO APPLYING FOR FINAL PAYMENT, THOROUGHLY CLEAN ALL EXPOSED PORTIONS OF MECHANICAL EQUIPMENT AND TOUCH UP PAINT WHERE NECESSARY. FOLLOW MANUFACTURER'S RECOMMENDATIONS FOR CLEANING.

DUCTWORK NOTES

SHEET METAL WORK

1. EXCEPT AS OTHERWISE SHOWN OR NOTED, ALL SUPPLY, RETURN, EXHAUST AND MAKEUP AIR METAL DUCTWORK AND OTHER SHEET METAL WORK SHALL BE G90 GALVANIZED SHEET STEEL AND SHALL BE INSTALLED IN ACCORDANCE WITH THE LATEST EDITION OF SMACNA (SHEET METAL AND AIR CONDITIONING CONTRACTORS NATIONAL ASSOCIATION, INC.). DUCT CONSTRUCTION STANDARDS, PRESSURE CLASSIFICATION 2 IN. W.G. GAUGES, SWAY BRACING (AS REQUIRED) AND SUSPENSION SHALL CONFORM TO SMACNA STANDARDS. SEAL ALL SEAMS AND JOINTS AIR AND WATERTIGHT. FLEXIBLE ALUMINUM DUCTWORK OR FIBERGLASS DUCTBOARD IS NOT ALLOWED (UNO).
2. ALL METAL HVAC SUPPLY AND RETURN DUCTWORK SHALL BE INSTALLED AS FOLLOWS:
   - CONCEALED DUCTWORK WITHIN THE BUILDING SHALL BE EXTERNALLY WRAPPED AND SECURED WITH MINIMUM R-8.0, 2" INSULATION WITH VAPOR BARRIER PER THE 2021 INTERNATIONAL MECHANICAL CODE, WITH LOCAL AMENDMENTS. INSULATION SHALL HAVE MAXIMUM RATINGS OF 25 FLAME SPREAD, 50 SMOKE DEVELOPED.
   - EXPOSED DUCTWORK WITHIN THE BUILDING SHALL BE INTERNALLY LINED AND PINNED WITH MINIMUM R-6.0, 1-1/2" INSULATION WITH VAPOR BARRIER PER THE 2021 INTERNATIONAL MECHANICAL CODE WITH LOCAL AMENDMENTS. INSULATION SHALL HAVE MAXIMUM RATINGS OF 25 FLAME SPREAD, 50 SMOKE DEVELOPED. EXPOSED DUCTWORK SHALL BE INSTALLED COMPLETE WITH FACTORY APPLIED PAINT GRIP, ZINC GRIP OR SIMILAR ETCH TREATMENT, SUITABLE FOR FINAL FIELD APPLIED PAINT BY THE GENERAL CONTRACTOR.
3. APPLY LINER IN ACCORDANCE WITH MANUFACTURER'S AND SMACNA RECOMMENDATIONS. ALL TRANSVERSE EDGES, OR ANY EDGES EXPOSED TO AIRFLOW SHALL BE COATED WITH AN APPROVED DUCT LINER COATING MATERIAL SUCH AS JOHNS MANVILLE SUPERSEAL PRODUCTS. JOINTS SHALL BE NEATLY BUTTED AND THERE SHALL BE NO INTERRUPTIONS OR GAPS.
4. ALL FLEXIBLE DUCTWORK SHALL BE STRETCHED AND SUSPENDED IN ACCORDANCE WITH LOCAL CODE. SUPPORT EVERY 3' WITH 2" WIDE GALVANIZED STEEL BANDS (MAX. SAG ½" BETWEEN SUPPORTS). MAXIMUM LENGTH OF DUCT SHALL BE SIX (5) FEET (KITCHEN ONLY – NO FLEX IN DINING ROOM). ALL FLEXIBLE DUCTS SHALL BE CONNECTED TO BRANCH RUNS AND FITTINGS WITH A PANDUIT-TYPE BAND, AND SHALL NOT BE ATTACHED DIRECTLY TO THE AIR DEVICE COLLAR.
5. ALL DUCT DIMENSIONS SHOWN ON DRAWINGS ARE CLEAR INSIDE DIMENSIONS. UNLESS SPECIFICALLY INDICATED, ALL DUCT TRANSITIONS SHALL BE SMOOTH AND GRADUAL WITH MAXIMUM DIVERGENT ANGLE OF 15°.
6. ALL SUPPLY, RETURN, AND RESTROOM EXHAUST DUCTWORK SHALL BE INSTALLED AS HIGH AS POSSIBLE UNDER THE ROOF STRUCTURE.
7. COORDINATE BRANCH DUCT LOCATIONS WITH TRUSS WEBS AND ROOF SCREEN POSTS.
8. DUCTWORK IS SHOWN DIAGRAMMATICALLY AND DOES NOT SHOW ALL OFFSETS, DROPS AND RISES OF RUNS. THE CONTRACTOR SHALL ALLOW IN HIS PRICE FOR ROUTING OF DUCTWORK TO AVOID OBSTRUCTIONS. EXACT LOCATIONS ARE SUBJECT TO APPROVAL OF ARCHITECT. COORDINATION WITH OTHER TRADES IS REQUIRED.
9. SUPPORT ALL DUCTWORK FROM BUILDING STRUCTURE AND/OR FRAMING IN AN APPROVED MANNER. WHERE OVERHEAD CONSTRUCTION DOES NOT PERMIT FASTENING OR SUPPORTS FOR EQUIPMENT, FURNISH ADDITIONAL FRAMING.
10. NO FLEXIBLE DUCTWORK SHALL BE ALLOWED ABOVE INACCESSIBLE CEILINGS.
11. ALL DUCTWORK SHALL BE SEALED TO COMPLY WITH 2021 INTERNATIONAL MECHANICAL CODE WITH LOCAL AMENDMENTS AND LEAK TESTED WITH DUCT LEAKAGE AS INDICATED IN CODE. ALL DUCTWORK SHALL BE SEALED FOR SEAL CLASS B (OR AS NOTED ON DUCT PLAN SHEET) AND LEAK TESTED AT THE RATED PRESSURE.

KITCHEN EXHAUST DUCTS

1. THE HOODS ARE TO BE FURNISHED BY OWNER AND INSTALLED BY MECHANICAL CONTRACTOR.
2. ALL TYPE-1 GREASE EXHAUST DUCTS SHALL BE NFPA 96 APPROVED 16 GA. WELDED BLACK IRON, EXTERNALLY WELDED WITH LIQUID TIGHT JOINTS, SEAMS, AND SMOOTH RADIUS ELBOWS AND TRANSITIONS. ALL TYPE-1 GREASE EXHAUST DUCTS SHALL BE DOUBLE WRAPPED WITH U.L. LISTED FIRE WRAP SIMILAR TO 3M FIRE BARRIER DUCT WRAP 20A IN ACCORDANCE WITH THE MANUFACTURER'S INSTALLATION INSTRUCTIONS. EACH GREASE DUCT RISER SHALL BE WRAPPED TO THE FULL EXTENT POSSIBLE FROM THE HOOD COLLAR CONNECTION UP TO THE TERMINATION AT THE EXHAUST FAN INLET. ALL GREASE EXHAUST FAN ROOF CURBS SHALL BE VENTED PER NFPA 96. PROVIDE REQUIRED ACCESS FOR SERVICING AND CLEANING, AND VERIFY THE HINGED CURB OPENING OPERATES PROPERLY.
3. MATERIAL – STEEL NOT LESS THAN 0.055 INCH (NO. 16 GAGE) IN THICKNESS OR STAINLESS STEEL NOT LESS THAN 0.044 INCH (NO. 18 GAGE) IN THICKNESS. JOINTS, SEAMS AND PENETRATIONS OF GREASE DUCTS SHALL BE MADE WITH A CONTINUOUS LIQUID-TIGHT WELD OR BRAZE MADE ON THE EXTERNAL SURFACE OF THE DUCT SYSTEM.
4. ALL TURNS IN KITCHEN EXHAUST DUCT SHALL BE ACHIEVED WITH THE USE OF A 1.5 RADIUS/WIDTH SMOOTH RADIUS ELBOW. REFERENCE MECHANICAL DETAILS.
5. A PERFORMANCE TEST SHALL BE CONDUCTED UPON COMPLETION AND BEFORE FINAL APPROVAL OF THE INSTALLATION OF A VENTILATION SYSTEM SERVING COMMERCIAL COOKING APPLIANCES. THE TEST SHALL VERIFY THE RATE OF EXHAUST AIRFLOW REQUIRED BY SECTION 507.13, MAKEUP AIRFLOW REQUIRED BY SECTION 508, AND PROPER OPERATION AS SPECIFIED IN CHAPTER 5 OF THE MECHANICAL CODE (INCLUDING CAPTURE AND CONTAINMENT TEST). THE PERMIT HOLDER SHALL FURNISH THE NECESSARY TEST EQUIPMENT AND DEVICES REQUIRED TO PERFORM THE TESTS.
6. ALL HORIZONTAL GREASE DUCT IS TO SLOPE 1/4" PER FOOT PER NFPA 96, 2012 EDITION.
7. CONTRACTOR TO PROVIDE AND INSTALL ALL CODE REQUIRED FIRE RATED ACCESS DOORS IN GREASE DUCTS AT ALL LOCATIONS REQUIRED BY CODE AND LOCAL AUTHORITY HAVING JURISDICTION.
8. PROVIDE CLEANOUTS IN ALL KITCHEN EXHAUST DUCTWORK AT EVERY CHANGE OF DIRECTION AND AT EVERY 12' OF DUCT. PROVIDE ACCESS PANELS AT ALL GREASE DUCT CLEANOUTS.
9. COORDINATE EXACT LOCATION OF SUPPLY AIR DUCTWORK IN THE KITCHEN AREA WITH ALL THREAD SUPPORTS FROM HOODS.
10. THE GREASE EXHAUST DUCT RISERS BETWEEN THE HOOD COLLARS AND EXHAUST FANS SHALL BE OF THE SAME SIZE AS THE RESPECTIVE FIELD CUT HOOD COLLAR SIZE, UNO. REFER TO THE HOOD SHEETS FOR THE HOOD COLLAR SIZES AS SPECIFIED BY THE HOOD MANUFACTURER.
11. THE CONDENSATE EXHAUST DUCT SHALL BE CORROSION RESISTANT 18 GA. STAINLESS STEEL (UNO), EXTERNALLY WELDED WITH LIQUID TIGHT JOINTS, SEAMS, AND SMOOTH RADIUS ELBOWS AND TRANSITIONS.
12. ALL TYPE 1 EXHAUST DUCTWORK SHALL BE PRESSURE TESTED PRIOR TO ACCEPTANCE. TEST PRESSURE SHALL BE 4" W.G. POSITIVE. LEAKAGE CRITERIA SHALL BE 0 CFM. AFTER WELDING THE DUCTWORK TO THE FLANGE CONNECTION AT HOOD AND CONNECTION AT FAN, PROVIDE TEMPORARY AIRTIGHT SEALS WITH TEST BLOWER CONNECTION AND TEST FLOOR METER CONNECT AT DUCT OPENING IN HOOD.

MECHANICAL LEGEND

SYMBOL	ABBR.	DESCRIPTION
	CD	CEILING DIFFUSER – SUPPLY
	CD	CEILING DIFFUSER BELOW DUCT – SUPPLY
	SAD	RISER – SUPPLY AIR DUCT
	SAD	DROP – SUPPLY AIR DUCT
	CR	CEILING REGISTER – RETURN
	CR	CEILING REGISTER BELOW DUCT – RETURN
	RAD	RISER – RETURN AIR DUCT
	RAD	DROP – RETURN AIR DUCT
	CE	CEILING REGISTER – EXHAUST
	CE	CEILING REGISTER BELOW DUCT – EXHAUST
	EAD	RISER – EXHAUST AIR DUCT
	(L)	LINED DUCTWORK
	VD	MANUAL VOLUME DAMPER
	FC	FLEXIBLE CONNECTION
		NEW DUCT
TAG CFM		AIR DEVICE DESIGNATION
T	TSTAT	PROGRAMMABLE THERMOSTAT
S	SENS	REMOTE TEMPERATURE SENSOR
H	SENS	REMOTE HUMIDITY SENSOR
S	SD	SMOKE DETECTOR
	POC	POINT OF CONNECTION
	CFM	CUBIC FEET PER MINUTE
	S/A	SUPPLY AIR
	O/A	OUTSIDE AIR
	E/A	EXHAUST AIR
	S.P.	STATIC PRESSURE
	FOH	FRONT OF HOUSE
	BOH	BACK OF HOUSE

ENGINEER:

BRIAN E. CHANDLER, PE

6201 CAMPUS CIRCLE DRIVE E.
IRVING, TEXAS 75038
TEL: 972.870.1288
WWW.IDSTUDIO4.COM
E-MAIL: bchandler@idstudio4.com

CORPORATE:
BRINKER RESTAURANT CORPORATION,
A VIRGINIA CORPORATION
3000 OLYMPUS BLVD.
DALLAS, TEXAS 75019
972.980.9917
www.brinker.com

09/23/2024

ISSUE FOR BID

THESE DOCUMENTS ARE FOR BIDDING PURPOSES ONLY. DO NOT USE FOR CONSTRUCTION.

RESTAURANT #CH1679
PROTOTYPE 18.5FS

CHILI'S TOOELE
951 N MAIN STREET
TOOELE, UT 84074

CLIENT: BRINKER RESTAURANT CORP.
A VIRGINIA CORPORATION

DATE	DESCRIPTION
6/27/2024	ISSUE FOR PERMIT
9/23/2024	ISSUE FOR BID

△	DATE	DESCRIPTION

PROJECT NUMBER:
CHI24007

SHEET TITLE:
MECHANICAL NOTES AND ABBREVIATIONS

SHEET NUMBER:
M401

FAN SCHEDULE

MARK	SERVICE	CFM	E.S.P. "WG	RPM	MOTOR HP	VOLTS/PH	MANUFACTURER	MODEL	TYPE	WEIGHT	NOTES
KEF-1	HOOD#1&3 COMBI/IMPINGER)	2940	1.50	1498	2.00	208/3	ACCUREX	XCUE-160	ROOF UPBLAST FAN	112	1,3,5,6,9,11
KEF-2	HOOD #2 (GRIDDLE)	1610	1.25	1496	0.75	115/1	ACCUREX	XCUE-140	ROOF UPBLAST FAN	86	1,3,5,6,9,11
KEF-3	HOOD #4 (FRYER)	862	1.10	1556	0.50	115/1	ACCUREX	XCUE-140	ROOF UPBLAST FAN	83	1,3,5,6,9,11
DEF-1	DISH MACHINE	600	1.00	1627	0.25	115/1	ACCUREX	XCUE-099	ROOF UPBLAST FAN	40	3,6,9,13,14
TEF-1	RESTROOMS	500	0.50	1588	0.10	115/1	ACCUREX	XRED-090	ROOF DOWNBLAST FAN	30	2,4,6,9,10
MAU-1	COOKLINE HOODS	4188	0.25	1725	2.00	208/3	ACCUREX	A2-D.5	ROOF MAKEUP FAN	2500	1,3,6,7,8,9

NOTES:

1. THE UTILITY CABINET SHALL BE FACTORY EQUIPPED WITH A PREWIRE PACKAGE TO INTERLOCK THE EXHAUST FANS WITH THE MAKEUP AIR UNIT.
2. THE FAN SHALL BE FACTORY EQUIPPED WITH AN INDEPENDENT WEATHER PROOF DISCONNECT SWITCH IN SIGHT OF THE EQUIPMENT.
3. WEATHER PROOF DISCONNECT SWITCH AND INTERNAL WIRING SHALL BE FACTORY INSTALLED.
4. THE FAN SHALL BE FACTORY EQUIPPED WITH ROOF CURB, BIRDSCREEN, SPEED CONTROLLER AND A GRAVITY BACKDRAFT DAMPER.
5. THE FAN SHALL BE FACTORY EQUIPPED WITH CURB MOUNTED HINGE KITS WITH CHAIN LIMITER.
6. FURNISHED WITH HOOD PACKAGE, INSTALLED BY MECHANICAL CONTRACTOR. FAN SHALL BE LEVEL AND BE SECURELY FASTENED TO ROOF CURB. REFERENCE HOOD DRAWINGS FOR ADDTIONAL INFORMATION.
7. THE MAKEUP AIR UNIT IS FACTORY EQUIPPED WITH DIRECT FIRED GAS COMBUSTION HEAT EXCHANGER, RATED FOR 256 MBH INPUT / 235 MBH OUTPUT.
8. THE MAKEUP AIR UNIT SHALL BE FACTORY EQUIPPED WITH DX DUAL STAGE COOLING SYSTEM, RATED FOR 91.0 MBH TOTAL CAPACITY/ 91.0 MBH SENSIBLE CAPACITY, AND A DISCHAREGE TEMPERATURE THERMOSTAT. THE MECHANICAL CONTRACTOR SHALL FIELD ADJUST TO 75°F.
9. ALL EQUIPMENT SHALL BE INSTALLED AND STARTED-UP PER THE MANUFACTURER'S "INSTALLATION, OPERATION, AND MAINTENANCE MANUALS". THE MECHANICAL CONTRACTOR SHALL COMPLETE ALL FACTORY "START-UP AND MAINTENANCE DOCUMENTATION" INCLUDED WITH THE EQUIPMENT PACKAGE, AND PROVIDE A COPY TO THE CHILI'S CONSTRUCTION MANAGER.
10. INTERLOCK WITH LIGHT SWITCH.
11. THE FAN SHALL BE FACTORY EQUIPPED WITH FACTORY GREASE BOX AND FACTORY CURB WITH VENTED EXTENSION.
12. PROVIDE WITH FLEXIBLE CONNECTIONS AT DUCT CONNECTIONS AND WASHABLE ALUMINUM FILTERS.
13. INTERLOCK WITH THE DISHMACHINE.
14. FAN SHALL HAVE EPOXY PAINT.

FLY FAN SCHEDULE

MARK	SERVICE	LENGTH	CFM	VOLTS/ PH	MCA/MOCP	MANUFACTURER	MODEL	TYPE	WEIGHT	NOTES
FF-1	REAR SERVICE DOOR	42"	2304	120/1	5.0 / 20	BERNER	ASN1042AA-P	WALL MNTD, DOWNBLAST	52	1,2

NOTES:

1. INSTALL COMPLETE WITH MANUFACTURER AVAILABLE DOOR LIMIT MICRO SWITCH.
2. FLY FAN SHALL BE FURNISHED BY OWNER WITH THE KITCHEN EQUIPMENT PACKAGE AND INSTALLED BY MECHANICAL CONTRACTOR.

AIR BALANCE SCHEDULE

MARK	DINING (CFM)			KITCHEN (CFM)		
	S/A	O/A	E/A	S/A	O/A	E/A
RTU-1	4750	1005	–	–	–	–
RTU-2	4750	1005	–	–	–	–
RTU-3	–	–	–	4750	950	–
MAU-1	–	–	–	–	4188	–
KEF-1	–	–	–	–	–	2940
KEF-2	–	–	–	–	–	1610
KEF-3	–	–	–	–	–	862
DEF-1	–	–	–	–	–	600
TEF-1	–	–	500	–	–	–
TOTAL	9500	2010	500	4500	5138	6512

DINING PRESSURIZATION
(O/A) – (E/A)= 1510 CFM

KITCHEN PRESSURIZATION
(O/A) – (E/A)= –874 CFM

NET BUILDING PRESSURIZATION (DINING + KITCHEN)= +636 CFM

ELECTRIC HEATER SCHEDULE

MARK	TYPE	AREA SERVED	HEATING CAPACITY	MAXIMUM CFM	ELECTRICAL VOLT / PH	MANUFACTURER	MODEL	NOTES
EUH-1	UNIT/CABINET	MECH ROOM	5.0 kW	350	208 / 3	CHROMALOX	LUH-05-B3-34	1,3,4
RH-1	RECESSED/CEILING	VESTIBULE	3.0 kW	300	208 / 3	QMARK	CDF 548	2,4,5,6

NOTES: (NOT ALL MAY APPLY)

1. PROVIDE WITH NON-FUSED DISCONNECT, REMOTE THERMOSTAT (SET AT 40° F), AND UNIVERSAL MOUNTING BRACKET.
2. COORDINATE POWER AND DISCONNECT REQUIREMENTS WITH THE ELECTRICAL CONTRACTOR.
3. HEATER SHALL BE MOUNTED FROM WALL, COORDINATE FINAL MOUNTING LOCATION WITH ARCHITECTURE.
4. INSTALL HEATER PER MANUFACTURER'S RECOMMENDATIONS.
5. INSTALL COMPLETE WITH MANUFACTURER AVAILABLE #CDF-REA MOUNTING ENCLOSURE FOR FULL RECESSED INSTALLATION.
6. INCLUDE MANUFACTURER AVAILABLE #T-200 REMOTE WALL MOUNTED THERMOSTAT WITH #TCI CLEAR LOCKING COVER. THERMOSTAT TO LIMIT HEATING TO 60°F MAXIMUM.

TEST AND BALANCE NOTES

1. CHILI'S WILL CONTRACT A THIRD PARTY AIR TEST AND BALANCE CONTRACTOR FOR THE TESTING, ADJUSTING AND BALANCING OF ALL ENVIRONMENTAL SYSTEMS SHOWN OR SPECIFIED ON THE CONTRACT DOCUMENTS. TYPE 1 KITCHEN HOOD EXHAUST DUCTS SHALL BE PRESSURE TESTED PRIOR TO ACCEPTANCE. TEST PRESSURE FOR EXHAUST DUCTS SHALL BE 4" W.G. POSITIVE AND THE LEAKAGE CRITERIA SHALL BE 0 CFM. THE WORK SHALL BE PERFORMED BY A FIRM CERTIFIED BY EITHER AABC OR NEBB, AND SIX (6) COPIES OF THE FINAL REPORT, SUBMITTED ON CERTIFYING AGENCY FORMS, SHALL BE SUBMITTED TO THE PROJECT ENGINEER FOR APPROVAL WITHIN TEN (10) DAYS OF COMPLETION OF INSPECTION. THE REPORT SHALL BEAR THE CERTIFICATION SEAL OF THE TAB SUPERVISOR IN CHARGE. REPORTS SHALL CONTAIN ALL AIR SIDE BALANCING DATA, INSTRUMENTS USED AND THEIR LATEST CALIBRATION DATES, PERSON(S) PERFORMING THE WORK AND A WRITTEN GUARANTEE THAT ALL TAB WORK WAS PERFORMED IN ACCORDANCE WITH THE CERTIFYING AGENCY STANDARDS AND PROCEDURES.

AIR DEVICE SCHEDULE

MARK	PICTURE	FACE SIZE	TYPE	MOUNTING TYPE	MAXIMUM N.C.	DIRECTION	MANUFACTURER	MODEL	NOTES
A		24x24	SUPPLY	LAY-IN	30	2-WAY	TITUS	PAS-AA (2 WAY)	1,3,4,5,6,7
B		24x24	SUPPLY	SURFACE (GYP. CLG)	30	4-WAY	TITUS	TMS	1,3,4,5,6
D		24x24	SUPPLY	LAY-IN (TILE CLG.)	30	4-WAY	EGER	EAMR112W	3,5,6,8
E		24x24	RETURN	LAY-IN (HINGED)	30	1-WAY	TITUS	350FL	1,3,6,10,12
F		2" + NECK	EXHAUST	SURFACE (GYP. CLG)	30	1-WAY	TITUS	56FLF1	1,3,6,12
G		48x2-SLOT	SUPPLY	SURFACE (GYP. CLG)	30	2-WAY	TITUS	ML-39	1,3,6
J		28x36	RETURN	SURFACE (GYP. WALL)	30	1-WAY	TITUS	350FS	2,3,6,9,11
K		24x24	SUPPLY	LAY-IN	30	4-WAY	TITUS	PAR-AA	1,3,4,5,6,13
M		12x8 (FACE SIZE)	TRANSFER	SURFACE (GYP. CLG)	30	1-WAY	TITUS	350FS	1,3,6

NOTES:

1. ALL AIR DEVICES SHALL BE ALUMINUM CONSTRUCTION WITH MILL FINISH.
2. AIR DEVICES SHALL BE INSTALLED WITH FACTORY BLACK FINISH. NO FIELD PAINTING ALLOWED.
3. PROVIDE NECESSARY MOUNTING HARDWARE AND ACCESSORIES AS REQUIRED FOR INTENDED INSTALLATION.
4. AIR DEVICE SHALL BE INSTALLED WITH MANUFACTURER AVAILABLE MOLDED INSULATION BACKING. FIELD FABRICATED INSULATION BACKING IS NOT ALLOWED.
5. AIR DEVICE SHALL BE INSTALLED WITH ACCESSIBLE OPPOSED BLADE DAMPER FOR MANUAL VOLUME ADJUSTMENT.
6. ACCEPTABLE MANUFACTURER FOR INSTALLED AIR DEVICE IS AS LISTED ONLY.
7. AIR DEVICE TO BE INSTALLED WITH PATTERN CONTROLLERS FOR TWO WAY THROW AS SHOWN ON THE FLOOR PLAN.
8. INSTALL AS AN ALL PLASTIC DEVICE AND COMPONENTS, COMPLETE WITH MANUFACTURER AVAILABLE COLLAR.
9. PAINT INSIDE OF DIFFUSER/DUCT FLAT BLACK FOR ZERO LINE OF SIGHT LOOK.
10. PROVIDE WITHOUT FILTER.
11. INSTALLED WITH VANES ANGLED UP.
12. AIR DEVICE TO HAVE TOP SIDE HINGES AND METAL QUARTER TURN FASTENER.
13. AIR DEVICE TO BE INSTALLED WITHOUT PATTERN CONTROLLERS.

O/A VENTILATION SCHEDULE

AREA SERVED	VENTILATION (OCCUPANCY)			VENTILATION (AREA)		
	# OF PEOPLE	CFM/PERSON	CFM	SQUARE FEET	CFM/SF	CFM
DINING	202	7.5	1515	2742	0.18	494
RESTROOMS	–	–	–	420	–	–
KITCHEN	–	–	–	1670	–	–
SUBTOTALS			1515			494
			2009 CFM			

NOTES:

1. CALCULATIONS ARE BASED ON 2018 IMC, TABLE 403.3
2. OUTDOOR AIR DEMAND IS: – 2009 CFM
   OUTDOOR AIR PROVIDED IS: + 2010 CFM

   OUTDOOR AIR DIFFERENCE IS: + 1 CFM

LENNOX NATIONAL ACCOUNTS EQUIPMENT PACKAGE

NOTES:

1. CHILIS HAS A NATIONAL ACCOUNT AGREEMENT WITH LENNOX FOR BUNDLED SOLUTIONS. THE ROOFTOP UNITS ARE A GENERAL CONTRACTOR ITEM, ASSIGNED TO THE INSTALLING CONTRACTOR. THE INSTALLING CONTRACTOR IS RESPONSIBLE FOR PROPER INSTALLATION AND ONE YEAR LABOR WARRANTY.
2. FOR COMPLETE INFORMATION ON THE SCHEDULED PACKAGE OF EQUIPMENT, CONTACT LENNOX NATIONAL ACCOUNTS.
3. ANY CHANGES OR VARIATIONS TO THE ORIGINAL EQUIPMENT PACKAGE DESCRIBED HEREIN THAT WOULD AFFECT THE HVAC EQUIPMENT PACKAGE SHOULD BE BROUGHT TO THE ATTENTION OF THE ACCOUNT COORDINATOR AT LENNOX NATIONAL ACCOUNTS AT TIME OF QUOTATION.
4. HEATING AND COOLING EQUIPMENT PACKAGE:
   INCLUDES ALL ROOFTOP AIR CONDITIONERS (INCLUDING CURBS) OR SPLIT SYSTEM AIR CONDITIONING EQUIPMENT WITH ALL ACCESSORIES AS SPECIFIED ON THE PLANS.
5. ORDERING PROCEDURES:
   LENNOX NATIONAL ACCOUNTS DEPARTMENT WILL ORDER EQUIPMENT AND COORDINATE SHIPMENT WITH THE SUCCESSFUL HVAC CONTRACTOR. THE HVAC CONTRACTOR WILL BE RESPONSIBLE FOR EQUIPMENT WARRANTY, DELIVERY COORDINATION, RECEIVING AND INSTALLATION AS DESCRIBED IN THE SPECIFICATIONS. THE HVAC CONTRACTOR SHALL CONTACT LENNOX NATIONAL ACCOUNTS AT 800.906.4427.
6. SHOP DRAWING SUBMITTALS:
   LENNOX SHALL PREPARE SHOP DRAWING SUBMITTAL PACKAGE CONSISTING OF THE FOLLOWING INFORMATION:
   - UNIT SELECTION AT SITE ALTITUDE INCLUDING COOLING AND HEATING CAPACITIES.
   - INFORMATION ON THE HUMIDITROL OPTION INCLUDING SENSORS.
   - OUTSIDE AIR ECONOMIZER AND HAIL GUARD (AS REQUIRED).
   - THERMOSTAT AND HUMIDITY SENSORS (INCLUDING WIRING DIAGRAMS) PER DRAWINGS.
   - THERMOSTAT PROGRAMMING INSTRUCTIONS AND SEQUENCE OF OPERATIONS.
   - ELECTRICAL POWER CHARACTERISTICS INCLUDING HORSEPOWER, VOLTAGE, AND AMPERAGE.
   - ELECTRICAL OPTIONS SUCH AS DISCONNECT AND RECEPTACLE.
   - ROOF CURB INFORMATION.
   - INSTALLATION INSTRUCTIONS.
   - OPERATING AND MAINTENANCE MANUALS.
7. EQUIPMENT START-UP INSTRUCTION:
   INSTALLING CONTRACTOR IS RESPONSIBLE FOR INITIAL STARTUP, RUNNING THE UNITS & MAINTAINING THE AIR FILTERS DURING THE CONSTRUCTION PHASE. TWO WEEKS PRIOR TO THE BUILDING TRAINING, THE CONTRACTOR WILL COORDINATE THE EQUIPMENT COMMISSIONING WITH LENNOX. THE CONTRACTOR MUST PROVIDE ONE TECHNICIAN TO WORK WITH LENNOX.

PACKAGED ROOFTOP UNIT SCHEDULE

	MARK	RTU-1	RTU-2	RTU-3	–	–
GENERAL	SERVING	DINING – BAR	DINING	KITCHEN	–	–
	MANUFACTURER	LENNOX	LENNOX	LENNOX	–	–
	MODEL NO.	LGH150H4M	LGH150H4M	LGH150H4M	–	–
	TYPE	GAS/ELEC	GAS/ELEC	GAS/ELEC	–	–
	OPERATING WEIGHT, LBS.	1511	1511	1511	–	–
	LENGTH, WIDTH, HEIGHT	101x60x47	101x60x47	101x60x47	–	–
	MINIMUM EER	10.8	10.8	10.8	–	–
ELECTRICAL	VOLTS/ PH/ HZ	208/3/60	208/3/60	208/3/60	–	–
	MCA (AMPS)	65	65	65	–	–
	MOCP (AMPS)	80	80	80	–	–
SUPPLY FAN	SUPPLY AIR CFM	4750	4750	4750	–	–
	OUTSIDE AIR CFM	1005	1005	950	–	–
	ESP ("W.G.)	0.80	0.80	0.80	–	–
	FAN RPM	1096	1096	1081	–	–
	MOTOR HP	5	5	5	–	–
COOLING	NOMINAL SIZE TONS	12.5	12.5	12.5	–	–
	TOTAL CAPACITY (MBH)	140.5	140.5	140.5	–	–
	SENSIBLE CAPACITY (MBH)	105.8	105.8	105.8	–	–
	OUTSIDE AIR DB/WB, °F.	100	100	100	–	–
	ENTERING AIR DB/WB, °F.	80/67	80/67	80/67	–	–
HEATING	TYPE OF HEAT	GAS	GAS	GAS	–	–
	HEATING INPUT (MBH)	240	240	240	–	–
	HEATING OUTPUT (MBH)	192	192	192	–	–
	OUTSIDE AIR DB/WB, °F.	17	17	17	–	–
	LEAVING AIR DB/WB, °F.	97.1	97.1	97.7	–	–
NOTES		1–11	1–11	1–10	–	–

NOTES:

1. PROVIDE A FACTORY AVAILABLE UN-INSULATED FLAT ROOF CURB THAT SHALL BE FIELD ASSEMBLED AND SHIMMED SUCH THAT THE TOP OF THE CURB SETS LEVEL. ROOF CURBS TO BE INSTALLED BY THE GENERAL CONTRACTOR, AND FIELD INSULATED BY THE MECHANICAL CONTRACTOR.
2. PROVIDE WITH LOW AMBIENT CONTROLS (DOWN TO 0°F), MICROPROCESSOR CONTROLS, CONDENSER COIL HAIL GUARD (FOR 'A' AND 'B' SIZED CABINETS), FRESH AIR TEMPERING KIT, HINGED ACCESS PANELS, CRANK CASE HEATER, AND FROSTAT.
3. PROVIDE WITH MANUFACTURER'S PROGRAMMABLE 24/7 THERMOSTAT, REMOTE HUMIDITY SENSORS (RTU-1 & 2 ONLY) CAPABLE OF AUTOMATIC COOLING/ HEATING CHANGEOVER.
4. PROVIDE FACTORY INSTALLED ENTHALPY CONTROLLED ECONOMIZER WITH MOTORIZED OUTSIDE AIR DAMPER.
5. PROVIDE A 2-POSITION MOTORIZED O/A DAMPER. DAMPER SHALL BE IN FULL CLOSED POSITION DURING NIGHT SETBACK HOURS, AND FULL OPEN POSITION (SET O/A PER SCHEDULE) DURING OCCUPIED HOURS.
6. FURNISH AND INSTALL WITH UNIT FACTORY AVAILABLE RETURN AIR SMOKE DETECTOR(S), CAPABLE OF SHUTTING DOWN THE ROOFTOP UNIT UPON ACTIVATION. SMOKE DETECTORS REQUIRE A REMOTE TEST/RESET STATION WITH LED INDICATORS (MODEL MS-KA/P/R).
7. PROVIDE FACTORY INSTALLED NON-FUSED ELECTRICAL DISCONNECT. CONVENIENCE RECEPTACLE SHALL BE FIELD WIRED BY THE E.C. AND POWERED SEPARATELY FROM THE UNIT.
8. PROVIDE SINGLE POINT ELECTRICAL POWER CONNECTION INCLUDING STARTERS AND CONTROLS.
9. UNIT SELECTIONS ARE BASED ON R-410A REFRIGERANT.
10. PROVIDE WITH 2" PLEATED FILTERS, MERV 8. PROVIDE NEW FILTERS AT CONSTRUCTION COMPLETION. DO NOT OPERATE UNITS WITHOUT FILTERS DURING CONSTRUCTION.
11. PROVIDE WITH HUMIDITROL OPTION FOR HOT GAS REHEAT, AND MANUFACTURER'S ADJUSTABLE REMOTE HUMIDITY SENSOR CAPABLE OF AUTOMATIC OPERATION OF THE COOLING CYCLE (ONCE THE DEMAND FOR COOLING IS SATISFIED BY THE T-STAT) FOR SUPPLEMENTAL DEHUMIDIFICATION.

HVAC SEQUENCE OF OPERATION

MARK	SERVICE	FUNCTION	START TIME	COOLING SETPOINT(°F)	HEATING SETPOINT(°F)	HUMIDITY SETPOINT(%RH)	NOTES
RTU-1	DINING – BAR	OCCUPIED	8:05 AM	80	65	50	1 THRU 8
		OCCUPIED	10:00 AM	75	70	50	
		UNOCCUPIED	12:00 AM	85	60	50	
RTU-2	DINING – SIDE	OCCUPIED	8:10 AM	80	65	50	1 THRU 8
		OCCUPIED	10:10 AM	75	70	50	
		UNOCCUPIED	12:00 AM	85	60	50	
RTU-3	KITCHEN	OCCUPIED	8:00 AM	75	70	50	1,2,3 & 5,6,7,8
		UNOCCUPIED	1:00 AM	85	60	50	

NOTES:

1. UNIT FAN SHALL RUN CONTINUOUSLY DURING OCCUPIED HOURS, AND CYCLE ON DEMAND DURING UNOCCUPIED HOURS. EACH ZONE SHALL BE PROVIDED WITH A 7 DAY PROGRAMMABLE THERMOSTAT PER 2015 IECC. CONTROLLER SHALL BE CAPABLE OF OCCUPIED/UNOCCUPIED HEATING AND COOLING CONTROL WITH THERMOSTATIC SET BACK CONTROLS.
2. UPON A CALL FOR COOLING:
   - COMPRESSORS TO CYCLE TO MAINTAIN THE SPACE SETTING, WITH THE GAS HEATER LOCKED OUT.
   - THERE SHALL BE A 2°F DEAD BAND (ADJUSTABLE) BETWEEN THE 1ST AND 2ND STAGE OF COOLING.
   - THERE SHALL BE A 5 MINUTE (ADJUSTABLE) TIME DELAY BETWEEN THE 1ST AND 2ND STAGE OF COOLING.
3. UPON A CALL FOR HEATING:
   - GAS FURNACE TO CYCLE TO MAINTAIN THE SPACE SETTING, WITH THE COMPRESSORS LOCKED OUT.
   - THERE SHALL BE A 2°F DEAD BAND (ADJUSTABLE) BETWEEN THE 1ST AND 2ND STAGE OF HEATING.
   - THERE SHALL BE A 5 MINUTE (ADJUSTABLE) TIME DELAY BETWEEN THE 1ST AND 2ND STAGE OF HEATING.
4. UPON A CALL FOR HUMIDITY CONTROL:
   - DURING OCCUPIED TIMES WHEN HUMIDISTAT INDICATES AN INCREASE IN HUMIDITY ABOVE THE SET POINT, THE HUMIDITROL SYSTEM SHALL ACTIVATE TO REDUCE THE SPACE HUMIDITY TO BELOW SET POINT.
   - DURING UNOCCUPIED TIMES WHEN HUMIDISTAT INDICATES AN INCREASE IN HUMIDITY ABOVE THE SET POINT, THE FAN SHALL TURN ON AND THE HUMIDITROL SYSTEM SHALL ACTIVATE TO REDUCE THE SPACE HUMIDITY TO BELOW SETPOINT.
5. UNIT SHALL CYCLE ON COOLING OR HEATING BASED UPON CALL FOR OPERATION PER SET POINT TEMPERATURE AT THE THERMOSTAT.
6. CONTROLS SHALL MAINTAIN PROGRAMMING AND TIME SETTING DURING LOSS OF POWER FOR A PERIOD OF 10 HOURS MINIMUM PER 2015 IECC. OUTDOOR AIR SUPPLY SHALL BE EQUIPPED WITH MOTORIZED DAMPERS THAT SHUT AUTOMATICALLY WHEN THE SYSTEM IS NOT IN USE PER 2015 IECC.
7. SMOKE ALARM MODE: UNIT SHALL SHUT DOWN AND ACTIVATE AUDIO-VISUAL ALARM IN AN APPROVED LOCATION UPON ACTIVATION OF SMOKE ALARM PER 2015 IMC. PROVIDE A LABEL INDICATING "AIR DETECTOR TROUBLE , RTU-X". IF A FIRE ALARM SYSTEM IS REQUIRED, DUCT SMOKE DETECTORS SHALL BE CONNECTED TO THE FIRE ALARM SYSTEM.
8. ECONOMIZER SHALL UTILIZE FIXED ENTHALPY CONTROL, WITH A SENSOR HIGH LIMIT SETPOINT OF hOA > 28 Btu/lb.

ENGINEER:

BRIAN E. CHANDLER, PE

6201 CAMPUS CIRCLE DRIVE E.
IRVING, TEXAS 75038
TEL: 972.870.1288
WWW.IDSTUDIO4.COM
E-MAIL: bchandler@idstudio4.com

CORPORATE:
BRINKER RESTAURANT CORPORATION,
A VIRGINIA CORPORATION
3000 OLYMPUS BLVD.
DALLAS, TEXAS 75019
972.980.9917
www.brinker.com

09/23/2024
ISSUE FOR BID
THESE DOCUMENTS ARE FOR BIDDING PURPOSES ONLY. DO NOT USE FOR CONSTRUCTION.

RESTAURANT #CH1679
PROTOTYPE 18.5FS

CHILI'S
TOOELE
951 N MAIN STREET
TOOELE, UT 84074

CLIENT: BRINKER RESTAURANT CORP.
A VIRGINIA CORPORATION

DATE	DESCRIPTION
6/27/2024	ISSUE FOR PERMIT
9/23/2024	ISSUE FOR BID

	DATE	DESCRIPTION
3	09.10.2024	CITY COMMENTS

PROJECT NUMBER:
CHI24007

SHEET TITLE:
MECHANICAL SCHEDULES

SHEET NUMBER:
M402

HOOD INFORMATION

HOOD NO.	MARK	MODEL	HOOD DIMENSIONS (IN.)			HOOD CONSTR.	COOKING LOAD / DUTY RATING	EXHAUST						SUPPLY		HANGING WEIGHT LBS.	SECTION LOCATION
			LENGTH	WIDTH	HEIGHT			TOTAL CFM	COLLAR(S)					MUA CFM	AC CFM		
									WIDTH	LENGTH	DIA.	CFM	S.P.				
1	1 - HOOD - COMBI	XXEW-84-S	84	60	24	430 SS WHERE EXPOSED	MEDIUM	1300	10	12		1300	0.47	1008		544	SINGLE

HOOD INFORMATION

HOOD NO.	MARK	LIGHTING DETAILS			GREASE FILTRATION DETAILS				UTILITY CABINET(S)				
		FIXTURE TYPE BULB / LAMP INFO	QTY	FOOT CANDLES	TYPE / MODEL MATERIAL	QTY	SIZE (IN.)		LOCATION	FIRE SYSTEM		CONTROLS	
							L	H		TYPE	SIZE	MODEL	INTERFACE
1	1 - HOOD - COMBI	INCANDESCENT (GLOBE) 100W A19 (BULBS NOT INCL.)	4	45.87	X-TRACTOR (SPARK ARRESTOR INCL.) STAINLESS STEEL	4	16	20	LEFT	ANSUL R102	6	XKC	TOUCHSCREEN
						1	20						

SUPPLY PLENUM INFORMATION

HOOD NO.	MARK	POS.	TYPE	SIZE (IN.)			INSULATED	DAMPER(S)	LED LIGHT(S)		TOTAL CFM	TOTAL S.P.	COLLARS						
				L	W	H			SUPPLIED	QTY			TYPE	MOUNTING	QTY	W	L	DIA.	CFM	VEL.
1	1 - HOOD - COMBI	FRONT	ASP	96	14	4	NO	YES	NO		1008	0.01	MUA	FACTORY	2	12	30		504	202

HOOD OPTIONS

UL 710 LISTED W/ OUT EXHAUST FIRE DAMPER - UL #R25625
BACK INTEGRAL AIR SPACE - 3 IN WIDE
FACTORY MOUNTED EXHAUST COLLAR(S)
PERFORMANCE ENHANCING LIP (PEL) TECHNOLOGY
STANDING SEAM CONSTRUCTION FOR SUPERIOR STRENGTH

HOOD HANGING HEIGHT FOR FIRE SYSTEMS

VERIFICATION OF HOOD HANGING HEIGHT ABOVE FINISHED FLOOR (A.F.F.) IS REQUIRED FOR CORRECT PLACEMENT OF FIRE SYSTEM NOZZLES.

☐ RECOMMENDED HANGING HEIGHT = 80" FROM FINISHED FLOOR TO LOWER FRONT EDGE OF HOOD.

☐ OTHER HANGING HEIGHT = _____" FROM FINISHED FLOOR TO LOWER EDGE OF HOOD.

SUPPLY PLENUM HANGER BRACKET DETAIL

HOOD HANGER BRACKET DETAIL

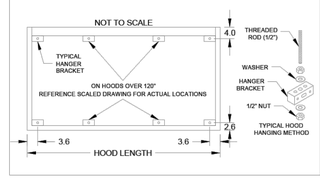

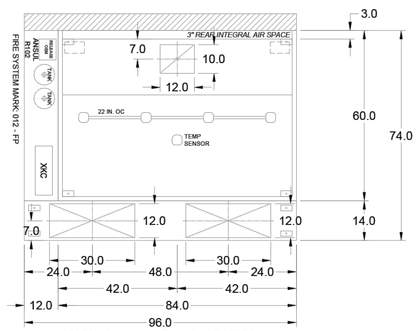

MARK: 1 - Hood - Combi - SECTION 1
PLAN VIEW

Fire (piping/drops/nozzles/etc.) subject to change. As built's can be provided at time of order and included with product shipment

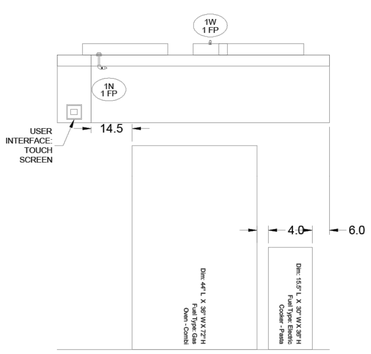

MARK: 1 - Hood - Combi - SECTION 1
ELEVATION VIEW

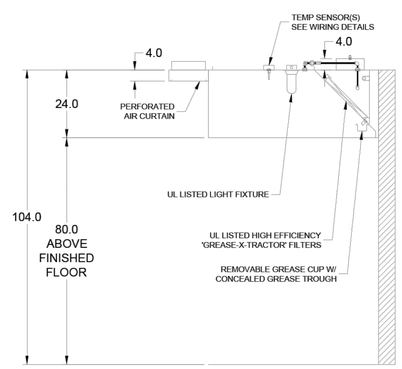

MARK: 1 - Hood - Combi
SECTION VIEW

NOTES:
1. THE INFORMATION PRESENTED HERE IS PROVIDED FOR REFERENCE AND COORDINATION ONLY.
2. THE KITCHEN EXHAUST HOODS AND FANS ARE FURNISHED BY THE OWNER, AND INSTALLED BY THE MECHANICAL CONTRACTOR.
3. FOR QUESTIONS REGARDING THE INSTALLATION REQUIREMENTS, CONTACT MR. MARK HAMILTON WITH ACCUREX AT 214.632.7239.

CHILIS - TOOELE UT

PROJECT 8/28/2024

MARK 1 - HOOD - COMBI

ACCUREX NORTH TX - 1898
MARK HAMILTON
MARK-HAMILTON@ACCUREX.COM
(214)632-7239

ACCUREX

ENGINEER:
BRIAN E. CHANDLER, PE
6201 CAMPUS CIRCLE DRIVE E.
IRVING, TEXAS 75038
TEL: 972.870.1288
WWW.IDSTUDIO4.COM
E-MAIL: bchandler@idstudio4.com

CORPORATE:
BRINKER RESTAURANT CORPORATION, A VIRGINIA CORPORATION
3000 OLYMPUS BLVD.
DALLAS, TEXAS 75019
972.980.9917
www.brinker.com

09/23/2024
ISSUE FOR BID
THESE DOCUMENTS ARE FOR BIDDING PURPOSES ONLY. DO NOT USE FOR CONSTRUCTION.

RESTAURANT #CH1679
PROTOTYPE 18.5FS

CHILI'S TOOELE
951 N MAIN STREET
TOOELE, UT 84074

CLIENT: BRINKER RESTAURANT CORP. A VIRGINIA CORPORATION

DATE	DESCRIPTION
6/27/2024	ISSUE FOR PERMIT
9/23/2024	ISSUE FOR BID

	DATE	DESCRIPTION
1	08.07.2024	CITY COMMENTS

PROJECT NUMBER:
CHI24007

SHEET TITLE:
ACCUREX DRAWINGS

SHEET NUMBER:
M501

HOOD INFORMATION

HOOD NO.	MARK	MODEL	HOOD DIMENSIONS (IN.)			HOOD CONSTR.	COOKING LOAD / DUTY RATING	EXHAUST						SUPPLY		HANGING WEIGHT LBS.	SECTION LOCATION
			LENGTH	WIDTH	HEIGHT			TOTAL CFM	COLLAR(S)					MUA CFM	AC CFM		
									WIDTH	LENGTH	DIA.	CFM	S.P.				
1	2 - HOOD - GRIDDLE-OVENS	XXEW-84-S	84	54	24	430 SS WHERE EXPOSED	HEAVY	1610	10	15		1610	0.56	1100		295	LEFT
2	2 - HOOD - GRIDDLE-OVENS	XXEW-102-S	102	54	24	430 SS WHERE EXPOSED	MEDIUM	1640	10	14		1640	0.542	1330		341	RIGHT

HOOD INFORMATION

HOOD NO.	MARK	LIGHTING DETAILS			GREASE FILTRATION DETAILS				UTILITY CABINET(S)				
		FIXTURE TYPE BULB / LAMP INFO	QTY	FOOT CANDLES	TYPE / MODEL MATERIAL	QTY	SIZE (IN.)		LOCATION	FIRE SYSTEM		CONTROLS	
							L	H		TYPE	SIZE	MODEL	INTERFACE
1	2 - HOOD - GRIDDLE-OVENS	INCANDESCENT (GLOBE) 100W A19 (BULBS NOT INCL.)	4	45.87	X-TRACTOR (SPARK ARRESTOR INCL.) STAINLESS STEEL	4	16	20					
						1	20						
2	2 - HOOD - GRIDDLE-OVENS	INCANDESCENT (GLOBE) 100W A19 (BULBS NOT INCL.)	5	48.41	X-TRACTOR (SPARK ARRESTOR INCL.) STAINLESS STEEL	5	16	20					
						1	20						

SUPPLY PLENUM INFORMATION

HOOD NO.	MARK	POS.	TYPE	SIZE (IN.)			INSULATED	DAMPER(S)	LED LIGHT(S)		TOTAL CFM	TOTAL S.P.	COLLARS							
				L	W	H			SUPPLIED	QTY			TYPE	MOUNTING	QTY	W	L	DIA.	CFM	VEL.
1	2 - HOOD - GRIDDLE-OVENS	FRONT	ASP	84	14	4	NO	YES	NO		1100	0.01	MUA	FACTORY	2	12	30		550	220
2	2 - HOOD - GRIDDLE-OVENS	FRONT	ASP	102	14	4	NO	YES	NO		1330	0.01	MUA	FACTORY	2	12	30		665	266

HOOD OPTIONS

UL 710 LISTED W/ OUT EXHAUST FIRE DAMPER - UL #R25625
BACK INTEGRAL AIR SPACE - 3 IN WIDE
FACTORY MOUNTED EXHAUST COLLAR(S)
LEFT MINI END SKIRT - 30.00 IN HIGH 30.00 IN TOP WIDTH 4.0 IN BOTTOM WIDTH
PERFORMANCE ENHANCING LIP (PEL) TECHNOLOGY
STANDING SEAM CONSTRUCTION FOR SUPERIOR STRENGTH

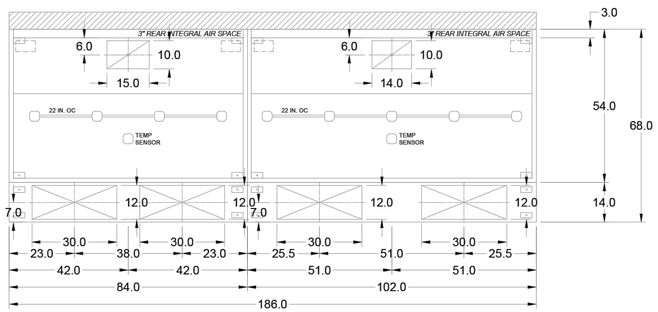

MARK: 2 - Hood - Griddle-Ovens - SECTION 1 PLAN VIEW
MARK: 2 - Hood - Griddle-Ovens - SECTION 2 PLAN VIEW

Fire (piping/drops/nozzles/etc.) subject to change. As built's can be provided at time of order and included with product shipment

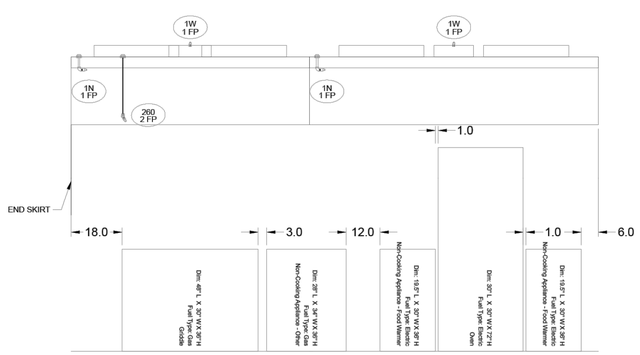

MARK: 2 - Hood - Griddle-Ovens - SECTION 1 ELEVATION VIEW
MARK: 2 - Hood - Griddle-Ovens - SECTION 2 ELEVATION VIEW

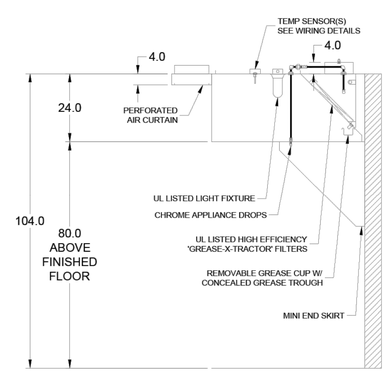

MARK: 2 - Hood - Griddle-Ovens (LAST HOOD IN ROW) SECTION VIEW

MINI-END SKIRT INSTALLATION DETAIL

NOTES:
1. REFER TO EQUIPMENT SCHEDULE FOR LOCATIONS OF MINI END SKIRTS MOUNTED ON EACH HOOD SECTION.

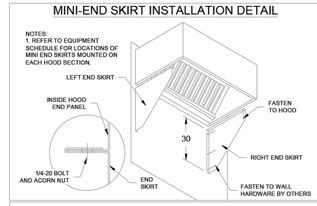

HOOD HANGING HEIGHT FOR FIRE SYSTEMS

VERIFICATION OF HOOD HANGING HEIGHT ABOVE FINISHED FLOOR (A.F.F.) IS REQUIRED FOR CORRECT PLACEMENT OF FIRE SYSTEM NOZZLES.

☐ RECOMMENDED HANGING HEIGHT = 80" FROM FINISHED FLOOR TO LOWER FRONT EDGE OF HOOD.

☐ OTHER HANGING HEIGHT = _____" FROM FINISHED FLOOR TO LOWER EDGE OF HOOD.

SUPPLY PLENUM HANGER BRACKET DETAIL

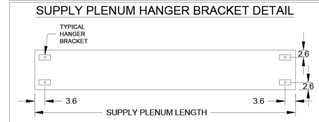

HOOD HANGER BRACKET DETAIL

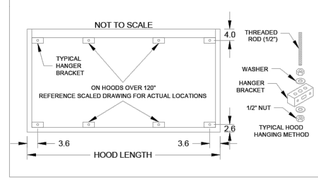

NOTES:
1. THE INFORMATION PRESENTED HERE IS PROVIDED FOR REFERENCE AND COORDINATION ONLY.
2. THE KITCHEN EXHAUST HOODS AND FANS ARE FURNISHED BY THE OWNER, AND INSTALLED BY THE MECHANICAL CONTRACTOR.
3. FOR QUESTIONS REGARDING THE INSTALLATION REQUIREMENTS, CONTACT MR. MARK HAMILTON WITH ACCUREX AT 214.632.7239.

CHILIS - TOOELE UT

PROJECT 8/28/2024

MARK 2 - HOOD - GRIDDLE-OVENS

ACCUREX NORTH TX - 1898
MARK HAMILTON
MARK.HAMILTON@ACCUREX.COM
(214)632-7239

ACCUREX

CHILI'S TOOELE
951 N MAIN STREET
TOOELE, UT 84074

CLIENT: BRINKER RESTAURANT CORP.
A VIRGINIA CORPORATION

RESTAURANT #CH1679
PROTOTYPE 18.5FS

ENGINEER:
BRIAN E. CHANDLER, PE
6201 CAMPUS CIRCLE DRIVE E.
IRVING, TEXAS 75038
TEL: 972.870.1288
WWW.IDSTUDIO4.COM
E-MAIL: bchandler@idstudio4.com

CORPORATE:
BRINKER RESTAURANT CORPORATION,
A VIRGINIA CORPORATION
3000 OLYMPUS BLVD.
DALLAS, TEXAS 75019
972.980.9917
www.brinker.com

09/23/2024
ISSUE FOR BID
THESE DOCUMENTS ARE FOR BIDDING PURPOSES ONLY. DO NOT USE FOR CONSTRUCTION.

DATE	DESCRIPTION
6/27/2024	ISSUE FOR PERMIT
9/23/2024	ISSUE FOR BID

	DATE	DESCRIPTION
1	08.07.2024	CITY COMMENTS

PROJECT NUMBER:
CHI24007

SHEET TITLE:
ACCUREX DRAWINGS

SHEET NUMBER:
M502

HOOD INFORMATION

HOOD NO.	MARK	MODEL	HOOD DIMENSIONS (IN.)			HOOD CONSTR.	COOKING LOAD / DUTY RATING	EXHAUST						SUPPLY		HANGING WEIGHT LBS.	SECTION LOCATION
			LENGTH	WIDTH	HEIGHT			TOTAL CFM	COLLAR(S)					MUA CFM	AC CFM		
									WIDTH	LENGTH	DIA.	CFM	S.P.				
1	3 - HOOD - FRYER	XXEC-66.5-S	66.5	TOP 36	FRT 14	430 SS WHERE EXPOSED	MEDIUM	862	9	9		862	0.498	750		140	SINGLE
				BOT 26	BACK 24												

HOOD INFORMATION

HOOD NO.	MARK	LIGHTING DETAILS			GREASE FILTRATION DETAILS				UTILITY CABINET(S)				
		FIXTURE TYPE BULB / LAMP INFO	QTY	FOOT CANDLES	TYPE / MODEL MATERIAL	QTY	SIZE (IN.)		LOCATION	FIRE SYSTEM		CONTROLS	
							L	H		TYPE	SIZE	MODEL	INTERFACE
1	3 - HOOD - FRYER	INCANDESCENT (GLOBE) 100W A19 (BULBS NOT INCL.)	3	51.28	X-TRACTOR (SPARK ARRESTOR INCL.) STAINLESS STEEL	4	16	16					
						0	20						

SUPPLY PLENUM INFORMATION

HOOD NO.	MARK	POS.	TYPE	SIZE (IN.)			INSULATED	DAMPER(S)	LED LIGHT(S)		TOTAL CFM	TOTAL S.P.	COLLARS							
				L	W	H			SUPPLIED	QTY			TYPE	MOUNTING	QTY	W	L	DIA.	CFM	VEL.
1	3 - HOOD - FRYER	FRONT	ASP	66.5	14	4	NO	YES	NO		750	0.02	MUA	FACTORY	1	12	30		750	300

HOOD OPTIONS

UL 710 LISTED W/ OUT EXHAUST FIRE DAMPER - UL #R25625
BACK INTEGRAL AIR SPACE - 3 IN WIDE
22 IN HIGH CEILING ENCLOSURES - FRONT LEFT RIGHT - FIELD INSTALLED
FACTORY MOUNTED EXHAUST COLLAR(S)
LEFT MINI END SKIRT - 26.00 IN HIGH 26.00 IN TOP WIDTH .0 IN BOTTOM WIDTH
RIGHT MINI END SKIRT - 26.00 IN HIGH 26.00 IN TOP WIDTH .0 IN BOTTOM WIDTH
HOOD FRONT IS TAPERED (FOR LOW CEILING APPLICATIONS)
PERFORMANCE ENHANCING LIP (PEL) TECHNOLOGY
STANDING SEAM CONSTRUCTION FOR SUPERIOR STRENGTH

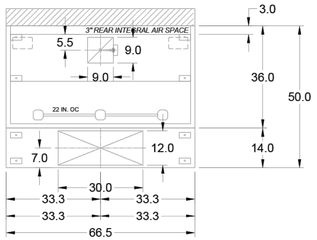

MARK: 3 - Hood - Fryer - SECTION 1
PLAN VIEW

Fire (piping/drops/nozzles/etc.) subject to change. As built's can be provided at time of order and included with product shipment

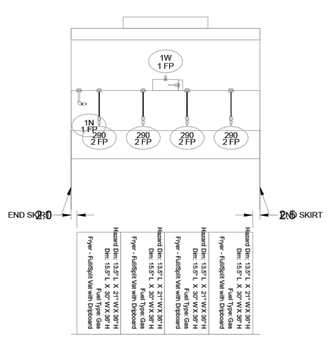

MARK: 3 - Hood - Fryer - SECTION 1
ELEVATION VIEW

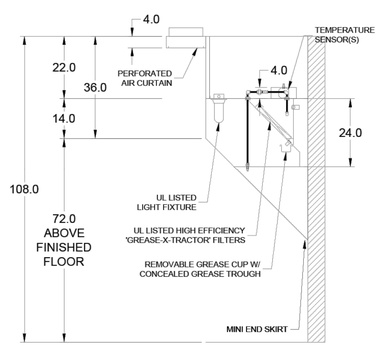

MARK: 3 - Hood - Fryer
SECTION VIEW

ENCLOSURE PANEL INSTALLATION DETAIL

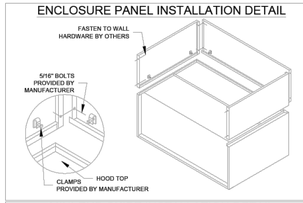

MINI-END SKIRT INSTALLATION DETAIL

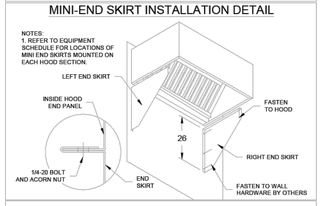

HOOD HANGING HEIGHT FOR FIRE SYSTEMS

VERIFICATION OF HOOD HANGING HEIGHT ABOVE FINISHED FLOOR (A.F.F.) IS REQUIRED FOR CORRECT PLACEMENT OF FIRE SYSTEM NOZZLES.

☐ RECOMMENDED HANGING HEIGHT = 72" FROM FINISHED FLOOR TO LOWER FRONT EDGE OF HOOD.

☐ OTHER HANGING HEIGHT = _____" FROM FINISHED FLOOR TO LOWER EDGE OF HOOD.

SUPPLY PLENUM HANGER BRACKET DETAIL

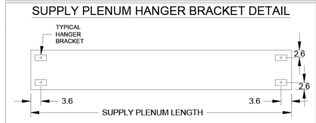

HOOD HANGER BRACKET DETAIL
FOR CROSSOVER HOODS

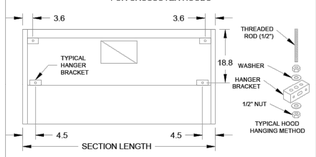

NOTES:
1. THE INFORMATION PRESENTED HERE IS PROVIDED FOR REFERENCE AND COORDINATION ONLY.
2. THE KITCHEN EXHAUST HOODS AND FANS ARE FURNISHED BY THE OWNER, AND INSTALLED BY THE MECHANICAL CONTRACTOR.
3. FOR QUESTIONS REGARDING THE INSTALLATION REQUIREMENTS, CONTACT MR. MARK HAMILTON WITH ACCUREX AT 214.632.7239.

CHILIS - TOOELE UT

PROJECT 8/28/2024

MARK 3 - HOOD - FRYER

ACCUREX NORTH TX - 1898
MARK HAMILTON
MARK.HAMILTON@ACCUREX.COM
(214)632-7239

ACCUREX

CHILI'S TOOELE
951 N MAIN STREET
TOOELE, UT 84074

CLIENT: BRINKER RESTAURANT CORP.
A VIRGINIA CORPORATION

RESTAURANT #CH1679
PROTOTYPE 18.5FS

DATE	DESCRIPTION
6/27/2024	ISSUE FOR PERMIT
9/23/2024	ISSUE FOR BID

	DATE	DESCRIPTION
1	08.07.2024	CITY COMMENTS

PROJECT NUMBER:
CHI24007

SHEET TITLE:
ACCUREX DRAWINGS

SHEET NUMBER:
M503

ENGINEER:
BRIAN E. CHANDLER, PE
6201 CAMPUS CIRCLE DRIVE E.
IRVING, TEXAS 75038
TEL: 972.870.1288
WWW.IDSTUDIO4.COM
E-MAIL: bchandler@idstudio4.com

CORPORATE:
BRINKER RESTAURANT CORPORATION,
A VIRGINIA CORPORATION
3000 OLYMPUS BLVD.
DALLAS, TEXAS 75019
972.980.9917
www.brinker.com

09/23/2024
ISSUE FOR BID
THESE DOCUMENTS ARE FOR BIDDING PURPOSES ONLY. DO NOT USE FOR CONSTRUCTION.

FIRE SYSTEM INFORMATION

MARK	MODEL	LOCATION	FLOW POINTS		SUPPLY LINE	DETECTION	MARK(S) PROTECTED BY FIRE SYSTEM
			HOODS	PCU			
012 - FP	ANSUL R-102 WET CHEMICAL	CABINET – LEFT END OF 1 - HOOD - COMBI	18 UTILIZED 22 AVAILABLE		CONTINUOUS	FUSIBLE LINK	1 - HOOD - COMBI SECTION 1
							2 - HOOD - GRIDDLE-OVENS SECTION 1
							2 - HOOD - GRIDDLE-OVENS SECTION 2
							3 - HOOD - FRYER SECTION 1

FIRE SYSTEM OPTIONS AND ACCESSORIES

FULL INSTALLATION (INCLUDES PRE-PIPED HOOD(S) WITH DETECTION AND FACTORY COORDINATED INSTALL)
CHROME SLEEVES FOR FACTORY PROVIDED APPLIANCES DROPS - INCLUDED
METAL BLOW-OFF CAPS - INCLUDED
GAS VALVE - INCLUDED - ELECTRICAL SHUTOFF VALVE, 1.25", 110V, 60HZ - PART# 458578
HOOD SUPPRESSION TANK - INCLUDED - 6 GAL. - [(2) 3.0 TANK(S)]
REMOTE PULL STATION - STANDARD - FIELD INSTALLATION AT SINGLE POINT OF EGRESS

ANSUL R102 (WET CHEMICAL) FIRE PROTECTION SYSTEM - MODEL FSSC

CONTROL PANEL

1. STAINLESS STEEL ENCLOSURE
2. AGENT STORAGE TANK
3. EXPELLENT GAS CARTRIDGE
4. ANSUL AUTOMAN RELEASE
5. REGULATOR
6. KNOCKOUT FOR WIRING MICROSWITCH

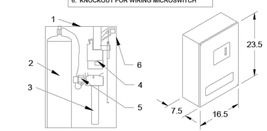

NOT TO SCALE

NOTES:

WET CHEMICAL FIRE PROTECTION SYSTEM TO BE ANSUL R-102, DESIGNED IN COMPLIANCE WITH UL 300 REQUIREMENTS.
-VERIFICATION OF ALL COOKING EQUIPMENT MAKE, MODEL AND LOCATION REQUIRED FOR ALL FIRE PROTECTION SYSTEMS.
-ALL FIRE SYSTEM PIPING IS STANDARDLY TO THE RIGHT END OF THE HOOD UNLESS A WALL IS LOCATED ON THE RIGHT END.
-ANSUL AUTOMAN RELEASE TO BE LOCATED WITHIN 60" OF HOOD.

THE BASIC FIRE SYSTEM WILL INCLUDE THE FOLLOWING:
-GAS SHUT-OFF VALVE, IF REQUIRED, TO BE SUPPLIED BY MANUFACTURER (UP TO 2" DIAMETER AS STANDARD), AND INSTALLED BY A LICENSED PLUMBER.
-MICRO SWITCH TO BE SUPPLIED BY MANUFACTURER FOR CONNECTION TO, BUT NOT LIMITED TO, BUILDING ALARM SYSTEM(S), EXHAUST AND SUPPLY FANS AND ELECTRICAL POWER SHUT DOWN. FIELD WIRING AND CONNECTIONS TO BE PERFORMED BY A LICENSED ELECTRICIAN.

THE BASIC FIRE SYSTEM DOES NOT INCLUDE THE FOLLOWING:
-FULL DUMP TEST OTHER THAN WHT IS SPECIFIED PER THE INSTALLATION MANUAL, OR TO SATISFY A STATE OR LOCAL CODE. PERMIT AND TESTING FEES ARE NOT INCLUDED UNLESS NOTED UNDER THE EQUIPMENT SCHEDULE FOR THE FIRE SYSTEM.
-MORE THEN TWO TRIPS TO THE JOBSITE OR SPECIAL TRANSPORTATION, OR OVERNIGHT LODGING REQUIREMENTS IN REMOTE AREAS. NORMAL TRAVEL DISTANCE IS FIRST 50 MI. (80.5 KM) FROM OFFICE.
- SPECIAL CLASSES OR ADDITIONAL LABOR FOR ACCESS TO SECURITY SENSITIVE AREAS.
-INSTALLATION OF GAS SHUT-OFF VALVE.
-SPECIAL DRAWINGS REQUIRED TO SATISFY STATE OR LOCAL CODE. PLAN EXAMINATION FEES, PE OR FS APPROVAL STAMP.
-UNION LABOR, GOVERNMENT LABOR, OR PREVAILING WAGES REQUIRED FOR FINAL FIELD HOOK-UP.
-ANY AND ALL ELECTRICAL COMPONENTS/CONNECTIONS REQUIRED TO SHUT DOWN FANS, SHUT OFF DEVICE FOR ELECTRIC COOKING EQUIPMENT (SHUNT TRIP BREAKER), OR ACTIVATE AN ALARM SYSTEM, ETC.
-ANY DISMANTLING OR REASSEMBLY REQUIRED TO GAIN ACCESS TO THE FIRE SUPPRESSION PIPING LOCATED ON THE TOP OF THE HOOD.
-ROUGH-IN HIDDEN CONDUIT FOR REMOTE PULL STATION OR GAS VALVE. (FLUSH MOUNTED PULL STATION).
-INSTALLATION OF MORE THAN (1) REMOTE PULL STATIONS OR DISTANCES GREATER THAN 20 FT (6.1M.)
-PARTS OR LABOR REQUIRED TO CORRECT PIPING DUE TO COOKING EQUIPMENT CHANGES OR DEVIATION FROM PLANS. OR ANY CHARGES FOR MISSING OR ADDITIONAL PARTS OTHER THEN THOSE INDICATED ON THE FIRE SUPPRESSION DETAIL.

WIRING DIAGRAM FOR MICRO SWITCHES

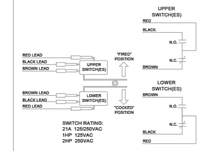

NOTE: IF ELECTRIC RELEASE, BOTH UPPER SWITCHES WILL BE USED FOR ACTUATING ADDITIONAL AUTOMANS (THEY WILL BE WIRED TO EACH OTHER AND TO THE BROWN WIRE ON THE ELECTRIC SOLENOID). THEREFORE, USE ONE OF THE UN-UTILIZED LOWER SWITCHES TO WIRE BACK TO CONTROL PANEL (DO NOT USE EITHER OF THE UPPER SWITCHES).

IF USING LOWER SWITCHES TO WIRE BACK TO CONTROL PANEL, NORMALLY-CLOSED WILL BE BLACK LEAD, AND NORMALLY-OPEN WILL BE BROWN LEAD.

DPDT SWITCHES PROVIDED BY MANUFACTURER MAY BE WIRED PER TYPICAL EXAMPLES SHOWN. VERIFY WITH LOCAL CODES AND EQUIPMENT SUPPLIED AS THE CONNECTION NEEDED FOR YOUR INSTALLATION.

CONNECTION TO BUILDINGS ALARM

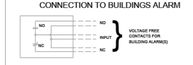

CONNECTION TO KC (PCB) CONTROL PANEL

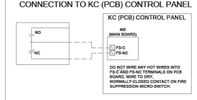

NOTES:
1 ———— DENOTES FIELD INSTALLATION.
2 ———— DENOTES FACTORY INSTALLATION.

WIRING DIAGRAM FOR MANUAL RESET RELAY (ELECTRIC GAS VALVE ONLY)

ANSUL PN 426151
(FACTORY PN 468825)

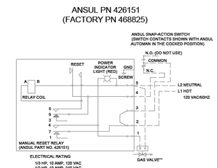

**GAS VALVES: "UL LISTED ELECTRICALLY-OPERATED SAFETY VALVE FOR NATURAL, OR LP GAS AS NEEDED OF APPROPRIATE PRESSURE AND TEMPERATURE RATING, 110V/60 HZ" OR ANSUL GAS VALVES, PART NUMBERS 13707, 13708, 13709, 13710 AND 17643.

SEE ANSUL MANUAL SECTION 5 - INSTALLATION INSTRUCTIONS FOR ADDITIONAL WIRING SCHEMATICS FOR MANUAL RESET RELAY

NOTES:
1. THE INFORMATION PRESENTED HERE IS PROVIDED FOR REFERENCE AND COORDINATION ONLY.
2. THE KITCHEN EXHAUST HOODS AND FANS ARE FURNISHED BY THE OWNER, AND INSTALLED BY THE MECHANICAL CONTRACTOR.
3. FOR QUESTIONS REGARDING THE INSTALLATION REQUIREMENTS, CONTACT MR. MARK HAMILTON WITH ACCUREX AT 214.632.7239.

CHILIS - TOOELE UT

PROJECT 8/28/2024

MARK

012 - FP

ACCUREX NORTH TX - 1898
MARK HAMILTON
MARK.HAMILTON@ACCUREX.COM
(214)632-7239

ACCUREX

ENGINEER:
BRIAN E. CHANDLER, PE
6201 CAMPUS CIRCLE DRIVE E.
IRVING, TEXAS 75038
TEL: 972.870.1288
WWW.IDSTUDIO4.COM
E-MAIL: bchandler@idstudio4.com

CORPORATE:
BRINKER RESTAURANT CORPORATION, A VIRGINIA CORPORATION
3000 OLYMPUS BLVD.
DALLAS, TEXAS 75019
972.980.9917
www.brinker.com

09/23/2024
ISSUE FOR BID
THESE DOCUMENTS ARE FOR BIDDING PURPOSES ONLY. DO NOT USE FOR CONSTRUCTION.

RESTAURANT #CHI1679
PROTOTYPE 18.5FS

CHILI'S TOOELE
951 N MAIN STREET
TOOELE, UT 84074

CLIENT: BRINKER RESTAURANT CORP. A VIRGINIA CORPORATION

DATE	DESCRIPTION
6/27/2024	ISSUE FOR PERMIT
9/23/2024	ISSUE FOR BID

1	DATE	DESCRIPTION
1	08.07.2024	CITY COMMENTS

PROJECT NUMBER:
CHI24007

SHEET TITLE:
ACCUREX DRAWINGS

SHEET NUMBER:
M504

Direct Drive Upblast Centrifugal Roof Exhaust Fan

MARK INFORMATION		FAN INFORMATION						MOTOR INFORMATION					
QTY	MARK	MODEL	VOLUME (CFM)	TOTAL EXTERNAL SP (IN WG)	FAN RPM	OPERATING POWER (HP)	WEIGHT (LB.)	SIZE (HP)	V/C/P	ENCLOSURE	MOTOR RPM	WINDINGS	NEC FLA*
1	KEF-1 - Combi-Ovens	XCUE-160-A	2,940	1.5	1,566	1.25	112	2	208/60/3	OP	1725	1	7.5

*NEC FLA - Based on table 430.250 or 430.248 of National Electrical Code 2020. Actual motor FLA may vary for sizing thermal overload, consult factory"

KEF-1 - Combi-Ovens : SELECTED OPTIONS AND ACCESSORIES
Motor VFD Rated without Shaft Grounding Protection
One piece fully welded windband
Tapered bushing wheel hub
Breather tube outlet area min. 4.4 sq. in. (sizes 99-480), 2.0 sq. in. (sizes 60-95)
Min. windband material thickness: 0.051" aluminum (060-240), 0.064" aluminum (240HP, 240XP), 0.080" aluminum (sizes 300-480)
Larger Curb Cap Size - 26 Square
UL/cUL 705 Listed - Supplement SC - "Power Ventilators for Restaurant Exh. Appliances" (Formerly UL 762)
Switch, NEMA-3R, Toggle,
Hinge, Factory Installed
High Temp Curb Seal Rated for Continuous Duty at 1500 F (Factory Attached)
Grease Trap (PN 475538)
Aluminum Wheel Material

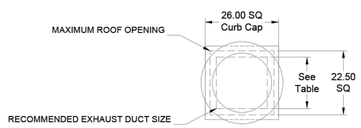

DUCT TYPE	SIZE
STANDARD	18 SQ
FIRE-WRAPPED	12 SQ

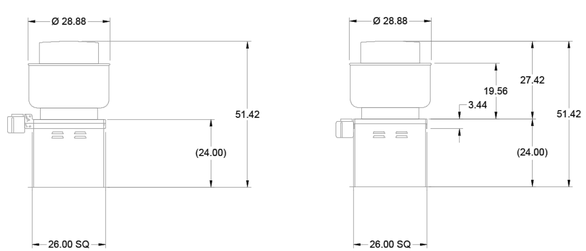

DUCT DIMENSIONS ARE LARGEST POSSIBLE DUCT TO FIT THROUGH CURB.
CONSULT SYSTEM DESIGN ENGINEER FOR RECOMMENDED DUCT SIZE.

OVERALL HEIGHT MAY BE GREATER DEPENDING ON
MOTOR, ADAPTER, AND/OR HINGE BASE.

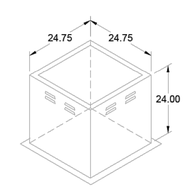

NOTES:
1. THE INFORMATION PRESENTED HERE IS PROVIDED FOR REFERENCE AND COORDINATION ONLY.
2. THE KITCHEN EXHAUST HOODS AND FANS ARE FURNISHED BY THE OWNER, AND INSTALLED BY THE MECHANICAL CONTRACTOR.
3. FOR QUESTIONS REGARDING THE INSTALLATION REQUIREMENTS, CONTACT MR. MARK HAMILTON WITH ACCUREX AT 214.632.7239.

CHILIS - TOOELE UT

KEF-1 - COMBI-OVENS

PROJECT 8/28/2024

MARK

ACCUREX NORTH TX - 1898
MARK HAMILTON
MARK.HAMILTON@ACCUREX.COM
(214)632-7239

ACCUREX

RESTAURANT #CH1679
PROTOTYPE 18.5FS

CHILI'S
TOOELE
951 N MAIN STREET
TOOELE, UT 84074

CLIENT: BRINKER RESTAURANT CORP.
A VIRGINIA CORPORATION

DATE	DESCRIPTION
6/27/2024	ISSUE FOR PERMIT
9/23/2024	ISSUE FOR BID

	DATE	DESCRIPTION
1	08.07.2024	CITY COMMENTS

ENGINEER:
BRIAN E. CHANDLER, PE
6201 CAMPUS CIRCLE DRIVE E.
IRVING, TEXAS 75038
TEL: 972.870.1288
WWW.IDSTUDIO4.COM
E-MAIL: bchandler@idstudio4.com

CORPORATE:
BRINKER RESTAURANT CORPORATION,
A VIRGINIA CORPORATION
3000 OLYMPUS BLVD.
DALLAS, TEXAS 75019
972.980.9917
www.brinker.com

09/23/2024
ISSUE FOR BID
THESE DOCUMENTS ARE FOR BIDDING PURPOSES ONLY. DO NOT USE FOR CONSTRUCTION.

PROJECT NUMBER:
CHI24007

SHEET TITLE:
ACCUREX DRAWINGS

SHEET NUMBER:
M505

Direct Drive Upblast Centrifugal Roof Exhaust Fan

MARK INFORMATION		FAN INFORMATION						MOTOR INFORMATION					
QTY	MARK	MODEL	VOLUME (CFM)	TOTAL EXTERNAL SP (IN WG)	FAN RPM	OPERATING POWER (HP)	WEIGHT (LB.)	SIZE (HP)	V/C/P	ENCLOSURE	MOTOR RPM	WINDINGS	NEC FLA*
1	KEF-2 - Griddle	XCUE-140-VG	1,610	1.25	1,587	0.61	91	1	115/60/1	TN	1725	1	16

*NEC FLA - Based on table 430.250 or 430.248 of National Electrical Code 2020. Actual motor FLA may vary for sizing thermal overload, consult factory"

KEF-2 - Griddle : SELECTED OPTIONS AND ACCESSORIES
One piece fully welded windband
Tapered bushing wheel hub
Breather tube outlet area min. 4.4 sq. in. (sizes 99-480), 2.0 sq. in. (sizes 60-95)
Min. windband material thickness: 0.051" aluminum (060-240), 0.064" aluminum (240HP, 240XP), 0.080" aluminum (sizes 300-480)
Larger Curb Cap Size - 26 Square
UL/cUL 705 Listed - Supplement SC - "Power Ventilators for Restaurant Exh. Appliances" (Formerly UL 762)
Switch, NEMA-3R, Toggle,
Hinge, Factory Installed
High Temp Curb Seal Rated for Continuous Duty at 1500 F (Factory Attached)
Grease Trap (PN 475538)
Aluminum Wheel Material

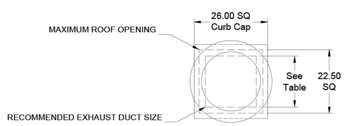

DUCT TYPE	SIZE
STANDARD	18 SQ
FIRE-WRAPPED	12 SQ

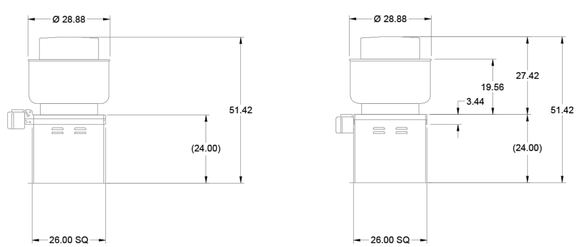

DUCT DIMENSIONS ARE LARGEST POSSIBLE DUCT TO FIT THROUGH CURB.
CONSULT SYSTEM DESIGN ENGINEER FOR RECOMMENDED DUCT SIZE.

OVERALL HEIGHT MAY BE GREATER DEPENDING ON
MOTOR, ADAPTER, AND/OR HINGE BASE.

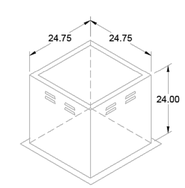

NOTES:
1. THE INFORMATION PRESENTED HERE IS PROVIDED FOR REFERENCE AND COORDINATION ONLY.
2. THE KITCHEN EXHAUST HOODS AND FANS ARE FURNISHED BY THE OWNER, AND INSTALLED BY THE MECHANICAL CONTRACTOR.
3. FOR QUESTIONS REGARDING THE INSTALLATION REQUIREMENTS, CONTACT MR. MARK HAMILTON WITH ACCUREX AT 214.632.7239.

CHILIS - TOOELE UT

KEF-2 - GRIDDLE

PROJECT 8/28/2024

MARK

ACCUREX NORTH TX - 1898
MARK HAMILTON
MARK.HAMILTON@ACCUREX.COM
(214)632-7239

ACCUREX

ENGINEER:

BRIAN E. CHANDLER, PE

6201 CAMPUS CIRCLE DRIVE E.
IRVING, TEXAS 75038
TEL: 972.870.1288
WWW.IDSTUDIO4.COM
E-MAIL: bchandler@idstudio4.com

CORPORATE:
BRINKER RESTAURANT CORPORATION,
A VIRGINIA CORPORATION
3000 OLYMPUS BLVD.
DALLAS, TEXAS 75019
972.980.9917
www.brinker.com

09/23/2024
ISSUE FOR BID
THESE DOCUMENTS ARE FOR BIDDING PURPOSES ONLY. DO NOT USE FOR CONSTRUCTION.

RESTAURANT #CH1679
PROTOTYPE 18.5FS

CHILI'S TOOELE
951 N MAIN STREET
TOOELE, UT 84074

CLIENT: BRINKER RESTAURANT CORP.
A VIRGINIA CORPORATION

DATE	DESCRIPTION
6/27/2024	ISSUE FOR PERMIT
9/23/2024	ISSUE FOR BID

	DATE	DESCRIPTION
1	08.07.2024	CITY COMMENTS

PROJECT NUMBER:
CHI24007

SHEET TITLE:
ACCUREX DRAWINGS

SHEET NUMBER:
M506

Direct Drive Upblast Centrifugal Roof Exhaust Fan

MARK INFORMATION		FAN INFORMATION						MOTOR INFORMATION					
QTY	MARK	MODEL	VOLUME (CFM)	TOTAL EXTERNAL SP (IN WG)	FAN RPM	OPERATING POWER (HP)	WEIGHT (LB.)	SIZE (HP)	V/C/P	ENCLOSURE	MOTOR RPM	WINDINGS	NEC FLA*
1	KEF-3 - Fryer	XCUE-140HP-VG	862	1.1	1,630	0.31	83	0.5	115/60/1	OP	1725	1	9.8

*NEC FLA - Based on table 430.250 or 430.248 of National Electrical Code 2020. Actual motor FLA may vary for sizing thermal overload, consult factory"

KEF-3 - Fryer : SELECTED OPTIONS AND ACCESSORIES
One piece fully welded windband
Tapered bushing wheel hub
Breather tube outlet area min. 4.4 sq. in. (sizes 99-480), 2.0 sq. in. (sizes 60-95)
Min. windband material thickness: 0.051" aluminum (060-240), 0.064" aluminum (240HP, 240XP), 0.080" aluminum (sizes 300-480)
Larger Curb Cap Size - 26 Square
UL/cUL 705 Listed - Supplement SC - "Power Ventilators for Restaurant Exh. Appliances" (Formerly UL 762)
Switch, NEMA-3R, Toggle,
Hinge, Factory Installed
High Temp Curb Seal Rated for Continuous Duty at 1500 F (Factory Attached)
Grease Trap (PN 475538)
Aluminum Wheel Material

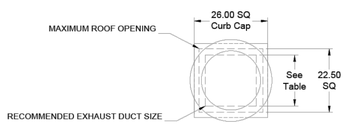

DUCT TYPE	SIZE
STANDARD	18 SQ
FIRE-WRAPPED	12 SQ

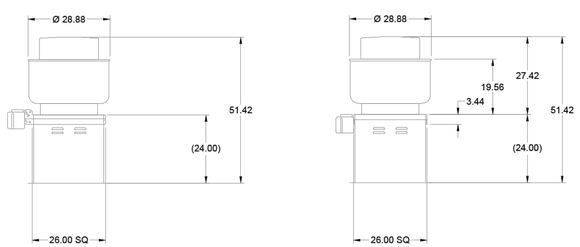

DUCT DIMENSIONS ARE LARGEST POSSIBLE DUCT TO FIT THROUGH CURB.
CONSULT SYSTEM DESIGN ENGINEER FOR RECOMMENDED DUCT SIZE.

OVERALL HEIGHT MAY BE GREATER DEPENDING ON
MOTOR, ADAPTER, AND/OR HINGE BASE.

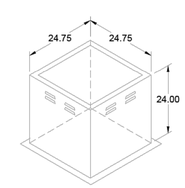

NOTES:
1. THE INFORMATION PRESENTED HERE IS PROVIDED FOR REFERENCE AND COORDINATION ONLY.
2. THE KITCHEN EXHAUST HOODS AND FANS ARE FURNISHED BY THE OWNER, AND INSTALLED BY THE MECHANICAL CONTRACTOR.
3. FOR QUESTIONS REGARDING THE INSTALLATION REQUIREMENTS, CONTACT MR. MARK HAMILTON WITH ACCUREX AT 214.632.7239.

CHILIS - TOOELE UT

KEF-3 - FRYER

PROJECT 8/28/2024

MARK

ACCUREX NORTH TX - 1898
MARK HAMILTON
MARK.HAMILTON@ACCUREX.COM
(214)632-7239

ACCUREX

ENGINEER:

BRIAN E. CHANDLER, PE

6201 CAMPUS CIRCLE DRIVE E.
IRVING, TEXAS 75038
TEL: 972.870.1288
WWW.IDSTUDIO4.COM
E-MAIL: bchandler@idstudio4.com

CORPORATE:
BRINKER RESTAURANT CORPORATION,
A VIRGINIA CORPORATION
3000 OLYMPUS BLVD.
DALLAS, TEXAS 75019
972.980.9917
www.brinker.com

09/23/2024
ISSUE FOR BID
THESE DOCUMENTS ARE FOR BIDDING PURPOSES ONLY. DO NOT USE FOR CONSTRUCTION.

RESTAURANT #CH1679
PROTOTYPE 18.5FS

CHILI'S TOOELE
951 N MAIN STREET
TOOELE, UT 84074

CLIENT: BRINKER RESTAURANT CORP.
A VIRGINIA CORPORATION

DATE	DESCRIPTION
6/27/2024	ISSUE FOR PERMIT
9/23/2024	ISSUE FOR BID

	DATE	DESCRIPTION
1	08.07.2024	CITY COMMENTS

PROJECT NUMBER:
CHI24007

SHEET TITLE:
ACCUREX DRAWINGS

SHEET NUMBER:
M507

Direct Drive Upblast Centrifugal Roof Exhaust Fan

MARK INFORMATION		FAN INFORMATION						MOTOR INFORMATION				
QTY	MARK	MODEL	VOLUME (CFM)	TOTAL EXTERNAL SP (IN WG)	FAN RPM	OPERATING POWER (HP)	WEIGHT (LB.)	SIZE (HP)	V/C/P	ENCLOSURE	MOTOR RPM	WINDINGS
1	DEF-1 - Dish	XCUE-100HP-VG	600	1	2,107	0.24	52	0.5	115/60/1	OP	2500	1

DEF-1 - Dish : SELECTED OPTIONS AND ACCESSORIES
One piece fully welded windband
Tapered bushing wheel hub
Breather tube outlet area min. 4.4 sq. in. (sizes 99-480), 2.0 sq. in. (sizes 60-95)
Min. windband material thickness: 0.051" aluminum (060-240), 0.064" aluminum (240HP, 240XP), 0.080" aluminum (sizes 300-480)
Standard Curb Cap Size - 19 Square
UL/cUL 705 Listed - "Power Ventilators"
Switch, NEMA-1, Toggle,
Foam Curb Seal (Factory Applied)
Aluminum Wheel Material
Conduit Chase Qty 1

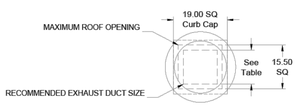

DUCT TYPE	SIZE
STANDARD	12 SQ
FIRE-WRAPPED	8 SQ

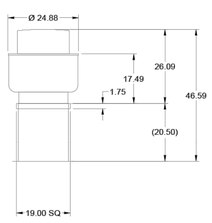

DUCT DIMENSIONS ARE LARGEST POSSIBLE DUCT TO FIT THROUGH CURB. CONSULT SYSTEM DESIGN ENGINEER FOR RECOMMENDED DUCT SIZE.

OVERALL HEIGHT MAY BE GREATER DEPENDING ON MOTOR, ADAPTER, AND/OR HINGE BASE.

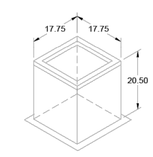

NOTES:
1. THE INFORMATION PRESENTED HERE IS PROVIDED FOR REFERENCE AND COORDINATION ONLY.
2. THE KITCHEN EXHAUST HOODS AND FANS ARE FURNISHED BY THE OWNER, AND INSTALLED BY THE MECHANICAL CONTRACTOR.
3. FOR QUESTIONS REGARDING THE INSTALLATION REQUIREMENTS, CONTACT MR. MARK HAMILTON WITH ACCUREX AT 214.632.7239.

PROJECT 8/28/2024
CHILIS - TOOELE UT
MARK
DEF-1 - DISH

ACCUREX NORTH TX - 1898
MARK HAMILTON
MARK.HAMILTON@ACCUREX.COM
(214)632-7239

ACCUREX

ENGINEER:
BRIAN E. CHANDLER, PE
6201 CAMPUS CIRCLE DRIVE E.
IRVING, TEXAS 75038
TEL: 972.870.1288
WWW.IDSTUDIO4.COM
E-MAIL: bchandler@idstudio4.com

CORPORATE:
BRINKER RESTAURANT CORPORATION, A VIRGINIA CORPORATION
3000 OLYMPUS BLVD.
DALLAS, TEXAS 75019
972.980.9917
www.brinker.com

09/23/2024
ISSUE FOR BID
THESE DOCUMENTS ARE FOR BIDDING PURPOSES ONLY. DO NOT USE FOR CONSTRUCTION.

RESTAURANT #CH1679
PROTOTYPE 18.5FS

CHILI'S TOOELE
951 N MAIN STREET
TOOELE, UT 84074

CLIENT: BRINKER RESTAURANT CORP. A VIRGINIA CORPORATION

DATE	DESCRIPTION
6/27/2024	ISSUE FOR PERMIT
9/23/2024	ISSUE FOR BID

⚠	DATE	DESCRIPTION
1	08.07.2024	CITY COMMENTS

PROJECT NUMBER:
CHI24007

SHEET TITLE:
ACCUREX DRAWINGS

SHEET NUMBER:
M508

Direct Drive Centrifugal Roof Exhaust Fan

MARK INFORMATION		FAN INFORMATION						MOTOR INFORMATION					
QTY	MARK	MODEL	VOLUME (CFM)	TOTAL EXTERNAL SP (IN WG)	FAN RPM	OPERATING POWER (HP)	WEIGHT (LB.)	SIZE (HP)	V/C/P	ENCLOSURE	MOTOR RPM	WINDINGS	NEC FLA*
1	TEF-1 - Restroom	XRED-090-VG	500	0.5	1,661	0.08	30	0.1	115/60/1	TN	1725	1	NA

*NEC FLA - Based on table 430.250 or 430.248 of National Electrical Code 2020. Actual motor FLA may vary for sizing thermal overload, consult factory"

TEF-1 - Restroom : SELECTED OPTIONS AND ACCESSORIES
Standard Curb Cap Size - 17 Square
UL/cUL 705 Listed - "Power Ventilators"
Switch, NEMA-1, Toggle,
Foam Curb Seal (Factory Applied)
Birdscreen: Galvanized, nom. 84% Free Area
Composite Wheel Material
Conduit Chase Qty 1

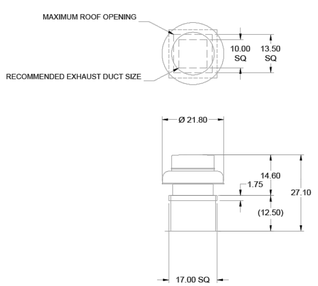

DUCT DIMENSIONS ARE LARGEST POSSIBLE DUCT TO FIT THROUGH CURB. CONSULT SYSTEM DESIGN ENGINEER FOR RECOMMENDED DUCT SIZE.

OVERALL HEIGHT MAY BE GREATER DEPENDING ON MOTOR, ADAPTER, AND/OR HINGE BASE.

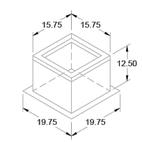

1

NOTES:
1. THE INFORMATION PRESENTED HERE IS PROVIDED FOR REFERENCE AND COORDINATION ONLY.
2. THE KITCHEN EXHAUST HOODS AND FANS ARE FURNISHED BY THE OWNER, AND INSTALLED BY THE MECHANICAL CONTRACTOR.
3. FOR QUESTIONS REGARDING THE INSTALLATION REQUIREMENTS, CONTACT MR. MARK HAMILTON WITH ACCUREX AT 214.632.7239.

CHILIS - TOOELE UT

TEF-1 - RESTROOM

PROJECT 8/28/2024

MARK

ACCUREX NORTH TX - 1898
MARK HAMILTON
MARK.HAMILTON@ACCUREX.COM
(214)632-7239

ACCUREX

ENGINEER:

BRIAN E. CHANDLER, PE

6201 CAMPUS CIRCLE DRIVE E.
IRVING, TEXAS 75038
TEL: 972.870.1288
WWW.IDSTUDIO4.COM
E-MAIL: bchandler@idstudio4.com

CORPORATE:
BRINKER RESTAURANT CORPORATION,
A VIRGINIA CORPORATION
3000 OLYMPUS BLVD.
DALLAS, TEXAS 75019
972.980.9917
www.brinker.com

09/23/2024

ISSUE FOR BID

THESE DOCUMENTS ARE FOR BIDDING PURPOSES ONLY. DO NOT USE FOR CONSTRUCTION.

RESTAURANT #CH1679
PROTOTYPE 18.5FS

CHILI'S TOOELE
951 N MAIN STREET
TOOELE, UT 84074

CLIENT: BRINKER RESTAURANT CORP.
A VIRGINIA CORPORATION

DATE	DESCRIPTION
6/27/2024	ISSUE FOR PERMIT
9/23/2024	ISSUE FOR BID

	DATE	DESCRIPTION
1	08.07.2024	CITY COMMENTS

PROJECT NUMBER:
CHI24007

SHEET TITLE:
ACCUREX DRAWINGS

SHEET NUMBER:
M509

EQUIPMENT SCHEDULE

Tempered Make-Up Air Unit — **Mark: MUA-1**

Qty	Accurex Model	Volume	External SP	Total SP	MCA	MOP	Weight	SCCR
1	XDGX-P116-H22-MF-7	4,188 CFM	0.5 in. wg	1.426 in. wg	44.2	50	2,475 lb	5kA

Motor Information

Size	VFCP	Enclosure	Motor with Shaft Gounding	Motor RPM	Operating Power
2 hp	208/60/3	ODP	No	1725	1.72 hp

Heating

Type	Gas Type	Temperature			Energy			Connection Gas (IN)	Building Gas Pressure	Control Access	Gas Pressure	
		Winter DB	Max Δ	Max LAT	Input	Output	Efficiency				Min	Max
Direct Gas	Natural	9.3 F	60.7 F	70.0 F	255.5 MBH	235.1 MBH	92%	3/4"	1/2 PSI	Right Hand	9 in. wg	0.5 PSI

Cooling

Cooling Type	Coil Model	Rows Deep	Fins Per Inch	Face Velocity	Total Energy	Sensible Energy	Entering Air (F)		Leaving Air (F)	
							Dry	Wet	Dry	Wet
Packaged DX	DX38S02S10-30x44	2	10	457 ft/min	91.0 MBH	91.0 MBH	97.4 F	67.0 F	74.1 F	59.9 F

Coil SP	Refrigerant	Suction Temp	Liquid Temp	Super Heat	Code 18/19	Suction Conn Qty / Size	Liquid Conn Qty / Size
NA	R-410a	45.2 F	110 F	8 F	0	NA	NA

Outlet Sound Power By Octave Band

62.5	125	250	500	1000	2000	4000	8000	LwA	dBA	Sones
72.7	*72.4*	*74.1*	*75.3*	*76.9*	*76.4*	*75.5*	*71*	*82.5*	*71.5*	*19.4*

- *Lw/A - A weighted sound power level based on AHRI 31 4*
- *dBA - A weighted sound pressure level less an 15.7 dB attenuation per octale band at 5.0 ft.*
- *Noise Criteria (NC) based on an average attenuation of 11.5 dB per octale band at 5.0 ft.*

OPTIONS AND ACCESSORIES

Air Flow Arrangement: Outdoor Air Only
Weatherhood: Louvered, 20x20x2 - (4)
Damper: Inlet
Outdoor Air Intake Position: End
Discharge Position: Bottom
Coating: Galvanized
Cooling Coil Coating - None
Insulation: Double Wall - Tempering On
Supply Fan Control: VFD
VFD Control: Constant Volume
Access Side: Right-Hand
Unit Weight: 2475 lb
Control Center
Heat Inlet Air Sensor
Cool Inlet Air Sensor
Unit Controls: Terminal Strip
Temperature Control: Discharge
Direct Gas Options/Accessories
Approvals: ETL
FM Compliant
Flame Sensing: Flame Rod

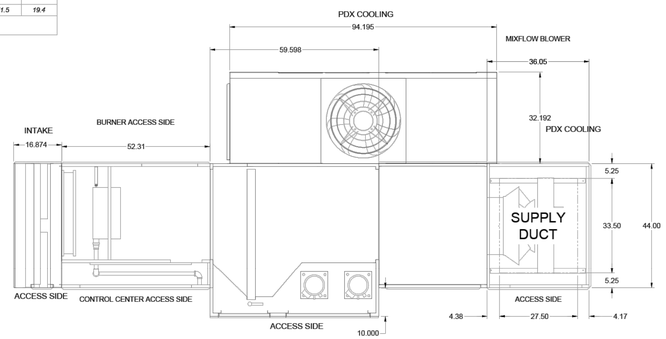

PLAN VIEW

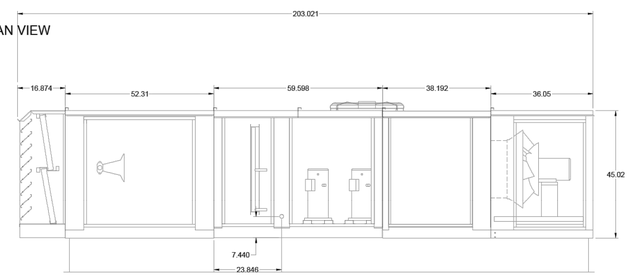

ELEVATION VIEW

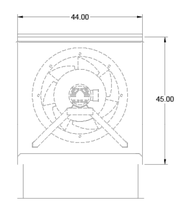

END VIEW

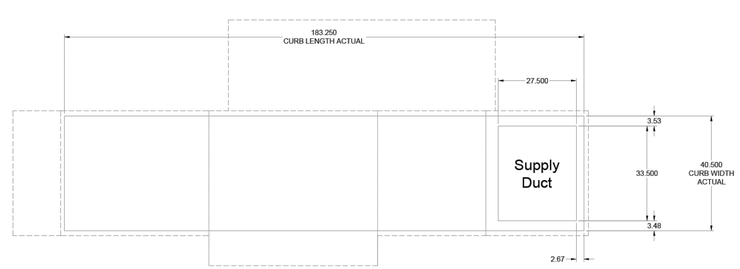

NOTE: Roof Opening Requirements:

Minimum Roof Opening: The minimum roof opening size is the illustrated duct diameter plus 0.25 in. on all sides.
For example: If the duct size is 14 x 14 in. square, the minimum roof opening size is 14.5 x 14.5 in. square.

Maximum Roof Opening: There must be a minimum perimeter of 1.75 in. between the roof opening and the roof curb.
For example: If the roof curb is 75 x 30 in. square, the maximum roof opening is 71.5 x 26.5 in. inches square.

NOTE: The weatherhood and filter sections of the make-up air unit are not supported by the curb.
This is by design, in order to help alleviate water infiltration issues.

FOOTPRINT

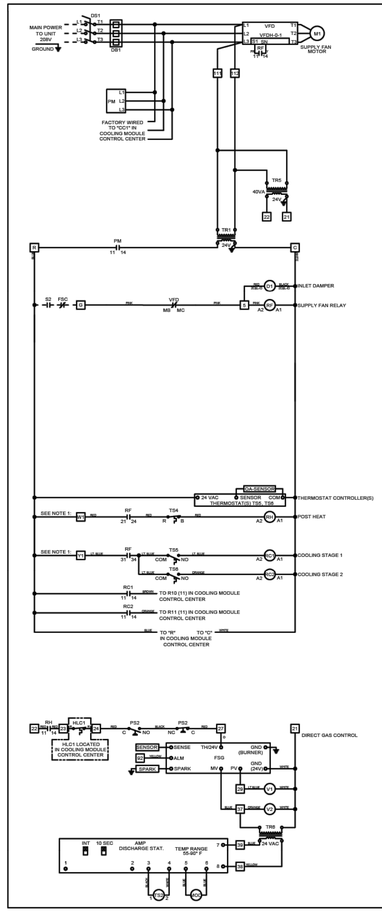

ACCUREX

Wiring Diagram Code:

AD61N402S013F30NM28

CAUTION

UNIT SHALL BE GROUNDED IN ACCORDANCE WITH N.E.C.
POWER MUST BE OFF WHILE SERVICING.

NOTES

USE COPPER CONDUCTORS ONLY
50° C FOR TERMINALS RATED LESS THAN 100 AMPS.
75° C FOR TERMINALS RATED 100 AMPS OR MORE.

FIELD CONTROL WIRING RESISTANCE SHOULD NOT EXCEED 0.75 OHM.

FIELD WIRED
FACTORY SUPPLIED AND WIRED

NOTE #1
FOR INTERNAL HEAT AND COOL ENABLE - REMOVE JUMPER R TO R1 AND X TO Y1 AND INSTALL EXTERNAL CONTACT.

WIRE COLOR CODE

BK	BLACK	BL	BLUE	BR	BROWN	GY	GRAY
LT BL	LIGHT BLUE	O	ORANGE	PK	PINK	PR	PURPLE
R	RED	W	WHITE	Y	YELLOW		

LEGEND

AMP AMPLIFIER
CCR COMPRESSOR CONTACTOR
CF1 CONDENSER FAN CONTACTOR
CH CRANKCASE HEATER
DP DIFF. SWITCH
DB DISTRIBUTION BLOCK
DS1 MAIN DISCONNECT SWITCH
FSC FIRE SYSTEM CONTACT
FSG FLAME SAFE GUARD
FUE FUSE
HLC1 HOT LIMIT CONTROL
HPS HIGH PRESSUR SWITCH
LPS LOW PRESSURE SWITCH
MM MOTOR
MOD MODULATING VALVE
PM PHASE MONITOR
PS2 AIR PROVING SWITCH
R10 COMPRESSOR INTERLOCK RELAY
R11 COMPRE INTERLOCK RELAY
RC1 COOLING STAGE 1 RELAY
RC2 COOLING STAGE 2 RELAY
RF SUPPLY FAN RELAY
RH HEAT RELAY
S2 FAN SWITCH
SS1 SUPPLY AIR COOL SWITCH
SG SPARK GENERATOR
TR6 TRANSFORMER
TS2 DISCHARGE AIR SENSOR
TS4 INLET AIR SENSOR - HEAT
TS5 INLET AIR SENSOR - COOL
JUMPER = COOL - DIFFERENTIAL = 3
TS6 DISCHARGE AIR SENSOR
JUMPER = COOL - DIFFERENTIAL = 3 - OFFSET = 10
TS9 LOW DISCHARGE TEMP SENSOR
JUMPER = COOL - DIFFERENTIAL = 20
V1 PILOT VALVE
V2 MAIN VALVE
VFD VARIABLE FREQUENCY DRIVE

Wiring Template: M39 DOC NUMBER: — REV: —

NOTES:
1. THE INFORMATION PRESENTED HERE IS PROVIDED FOR REFERENCE AND COORDINATION ONLY.
2. THE KITCHEN EXHAUST HOODS AND FANS ARE FURNISHED BY THE OWNER, AND INSTALLED BY THE MECHANICAL CONTRACTOR.
3. FOR QUESTIONS REGARDING THE INSTALLATION REQUIREMENTS, CONTACT MR. MARK HAMILTON WITH ACCUREX AT 214.632.7239.

CHILIS - TOOELE UT

MUA-1

PROJECT 8/28/2024

MARK

ACCUREX NORTH TX - 1898
MARK HAMILTON
MARK.HAMILTON@ACCUREX.COM
(214)632-7239

ACCUREX

ENGINEER:

BRIAN E. CHANDLER, PE

6201 CAMPUS CIRCLE DRIVE E.
IRVING, TEXAS 75038
TEL: 972.870.1288
WWW.IDSTUDIO4.COM
E-MAIL: bchandler@idstudio4.com

CORPORATE:
BRINKER RESTAURANT CORPORATION,
A VIRGINIA CORPORATION
3000 OLYMPUS BLVD.
DALLAS, TEXAS 75019
972.980.9917
www.brinker.com

09/23/2024
ISSUE FOR BID
THESE DOCUMENTS ARE FOR BIDDING PURPOSES ONLY. DO NOT USE FOR CONSTRUCTION.

RESTAURANT #CH1679
PROTOTYPE 18.5FS

CHILI'S TOOELE
951 N MAIN STREET
TOOELE, UT 84074

CLIENT: BRINKER RESTAURANT CORP.
A VIRGINIA CORPORATION

DATE	DESCRIPTION
6/27/2024	ISSUE FOR PERMIT
9/23/2024	ISSUE FOR BID

	DATE	DESCRIPTION
1	08.07.2024	CITY COMMENTS

PROJECT NUMBER:
CHI24007

SHEET TITLE:
ACCUREX DRAWINGS

SHEET NUMBER:
M510

CONTROL INFORMATION

MARK	ELECTRICAL CONTROL PACKAGE		USER INTERFACE	
	MODEL	LOCATION	TYPE	LOCATION
CC-1	XKC-CV-SB-31-4-1-0	LEFT CABINET ON 1 - HOOD - COMBI	FULL COLOR TOUCHSCREEN	CABINET – LEFT CABINET ON 1 - HOOD - COMBI

CONTROL FEATURES

- HOOD LIGHT CONTROL
- TEMP SENSORS (FACTORY INSTALLED) - QTY. 4
- DRY FIRE CONTACTS - QTY. 1
- LIGHTS OFF DURING FIRE
- EXHAUST MAX DURING FIRE
- SUPPLY OFF DURING FIRE
- BMS INTEGRATION - BACNET MSTP
- VFD(S) IN CONTROL PANEL PROVIDED FOR BALANCING

FANS CONTROLLED

FAN #	TYPE	FAN	FAN MARK	ZONE	CFM	MOTOR HP	MOTOR VOLT	CYCLE	MOTOR PHASE	MOTOR STARTER IN PANEL	VFD IN PANEL
1	EXHAUST	E1	KEF-1 - COMBI-OVENS	1	2940	2	208	54	3	NO	YES
2	EXHAUST	E2	KEF-2 - GRIDDLE	1	1610	1	115	60	1	NO	NO
3	EXHAUST	E3	KEF-3 - FRYER	1	862	0.5	115	60	1	NO	NO
4	SUPPLY	S1	MUA-1	1	4188	2	208	60	3	NO	NO

ACCUREX

DOC NUMBER: ---- REV: ----

CAUTION
UNIT MUST BE GROUNDED IN ACCORDANCE WITH N.E.C. POWER MUST BE OFF WHILE SERVICING.

ATTENTION
L'APPAREIL DOIT ÊTRE MIS À LA TERRE CONFORMÉMENT AU CODE C.E. L'ALIMENTATION DOIT ÊTRE COUPÉE DURANT L'ENTRETIEN.

c UL us LISTED 43BM
COMMERCIAL APPLIANCE OUTLET CENTER
ELECTRICAL RATINGS: 110-240V, 1PHASE, 50-60HZ,15A
BASE FILE #E200616, ML FILE #E313951

THESE DRAWINGS SHALL NOT BE REMOVED FROM THIS EQUIPMENT. USE COPPER CONDUCTORS RATED TO 90°C UNLESS SPECIFIED. TORQUE CONTROL & GROUND BLOCKS TO 8 LBS. IN. TORQUE POWER LUGS/SCREWS TO COMPONENT RATINGS LISTED. TORQUE CONTROL BOARD SCREW TERMINALS TO 3.5 LBS. IN. FIELD CONTROL WIRING RESISTANCE SHOULD NOT EXCEED 0.75 OHM. SEE IOM FOR ADDITIONAL INFORMATION, OR CALL FACTORY AT 1-800-371-6858.
PRG VERSION: V4
FIELD WIRED (CÂBLÉ LOCALEMENT)
FACTORY WIRED (CÂBLÉ À L'USINE)

NE PAS RETIRER CES DESSINS DE CET ÉQUIPEMENT. SAUF INDICATION CONTRAIRE, UTILISER DES CONDUCTEURS EN CUIVRE CLASSÉS 90 °C. SERRER LES BORNES DE COMMANDE ET DE MISE À LA TERRE À 8 LB-PO. SERRER LES COSSES/VIS D'ALIMENTATION AUX COUPLES INDIQUÉS POUR LE COMPOSANT. SERRER LES BORNES À VIS DE LA CARTE DE COMMANDE À 3,5 LB-PO. LA RÉSISTANCE DU CÂBLAGE DE COMMANDE LOCAL NE DOIT PAS DÉPASSER 0,75 OHM. POUR PLUS D'INFORMATION, CONSULTER LE MANUEL OU APPELER 1-800-371-6858

WIRING DIAGRAM CODE: WDC#
JOB NAME: CHILIS - TOOELE UT
MODEL: XKC-CV-SB-31-4-1-0
SERIAL NUMBER: WDSN#
MARK: CC-1

POWER WIRING FOR KITCHEN CONTROLS
(WIRING TO BE DONE BY ELECTRICIAN)

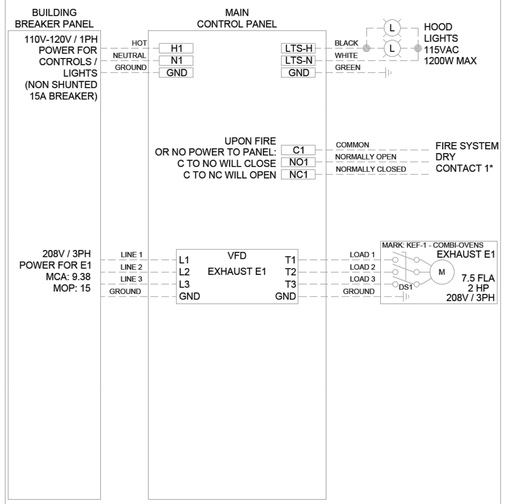

POWER WIRING FROM BREAKER PANEL DIRECT TO FANS
(WIRING TO BE DONE BY ELECTRICIAN)

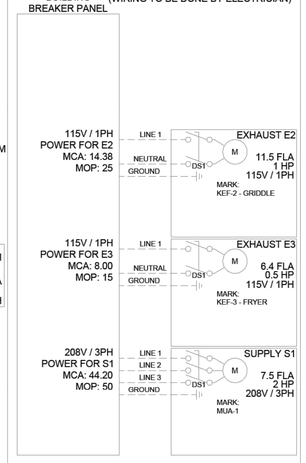

CONTROL WIRING FOR KITCHEN CONTROLS
(WIRING TO BE DONE BY ELECTRICIAN, IF NO CONTROLS CONTRACTOR. USE 18-22GA WIRE UNLESS SPECIFIED.)

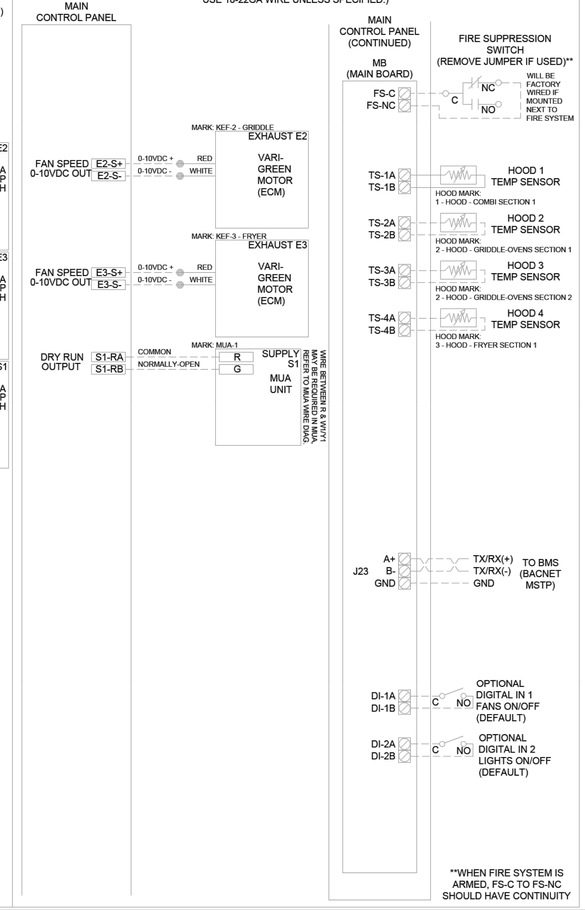

*FIRE SYSTEM DRY CONTACT WIRING EXAMPLES

SHUNT TRIP (BY OTHERS) WIRING EXAMPLE:

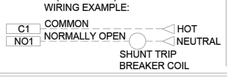

APPLIANCE CONTACTORS (BY OTHERS) WIRING EXAMPLE:

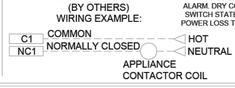

DO NOT USE CONTACTS FOR PROVIDING SIGNALS TO BUILDING FIRE ALARM. DRY CONTACTS SWITCH STATE DURING POWER LOSS TO PANEL.

CABINET DETAILS

DRAWING NOT TO SCALE

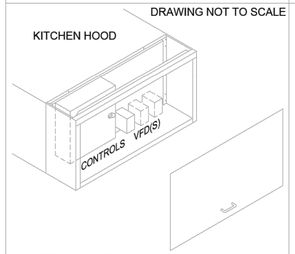

MOUNTING LOCATION:
UTILITY CABINET ON HOOD
(INNER CONTROL BOX: 12 X 20 X 6)

NOTES:
1) WHEN CONTROLS ARE MOUNTED IN HOOD-MOUNTED OR WALL-MOUNTED UTILITY CABINET, FOR HOOD OR WALL CABINET DIMENSIONS SEE HOOD SUBMITTAL.

2) MINIMUM OF 36" OF CLEARANCE RECOMMENDED IN FRONT OF CONTROL CABINET

USER INTERFACE DETAILS

MOUNTING TYPE
FACTORY MOUNTED:
UTILITY CABINET - LEFT END OF HOOD

USER INTERFACE CONTROL
FANS AND LIGHTS

INTERFACE CABLE LENGTH
7FT (FACTORY PROVIDED)

ZONE CONFIGURATION

ZONE #	ZONE	ROOM TEMP
1	Z1	PRESET

HOOD CONFIGURATION

HOOD #	HOOD	HOOD MARK	ZONE	EXHAUST	SUPPLY	MB-TEMP SENSORS	HCB
1	H1	1 - HOOD - COMBI SECTION 1	Z1	E1	S1	TS1	NO
2	H2	2 - HOOD - GRIDDLE-OVENS SECTION 1	Z1	E2	S1	TS2	NO
3	H3	2 - HOOD - GRIDDLE-OVENS SECTION 2	Z1	E1	S1	TS3	NO
4	H4	3 - HOOD - FRYER SECTION 1	Z1	E3	S1	TS4	NO

WIRING DIAGRAM CODE: WDC#
JOB NAME: CHILIS - TOOELE UT
MODEL: XKC-CV-SB-31-4-1-0
SERIAL NUMBER: WDSN#
MARK: CC-1
DOC NUMBER: ---- REV: ----

DEFAULT SETTINGS / PARAMÈTRES PAR DÉFAUT

FACTORY SETTINGS
TYPE: CV
CONFIGURATION: STANDARD
ZONES: 1
HOODS: 4
SUMPS: 0
EXHAUST FANS: 3
SUPPLY FANS: 1
MB ROOM SENSOR: NO
MB TEMP SENSORS: 4
HIGH TEMP FAULT: NO
FREEZE PROTECTION: YES
GAS RESET: NO
FAN PROVING: NO
BMS: BACNET MSTP

ZONE SETTINGS
SEE ZONE CONFIGURATION IN TABLE ON LEFT

HOOD SETTINGS
SEE HOOD CONFIGURATION IN TABLE ON LEFT

EXHAUST FAN SETTINGS
SEE FAN CONFIGURATION IN TABLE ON LEFT

SUPPLY FAN SETTINGS
SEE FAN CONFIGURATION IN TABLE ON LEFT

SENSOR SETTINGS
SEE HOOD CONFIGURATION IN TABLE ON LEFT

USER INTERFACE SETTINGS (MB)
FAN & LIGHT BUTTONS: SHOW BOTH (SEPERATE)

USER INTERFACE SETTINGS (HCB)
NA

GENERAL SETTINGS
TIME ZONE: CENTRAL DAYLIGHT (DEFAULT)

FIRE/FAULT SETTINGS
EXHAUST DURING FIRE: MAX
SUPPLY DURING FIRE: OFF
LIGHTS DURING FIRE: OFF

BMS SETTINGS
BAUD RATE: 9600
MAC ADDRESS: 0
MAX MASTER: 127
MAX INFO FRAMES: 20

PRG VERSION: V4

FAN CONFIGURATION

FAN #	TYPE	FAN	FAN MARK	ZONE	MIN CFM	MAX CFM	MODBUS VFD	VFD ADDRESS	MIN FREQ.	MAX FREQ.	MIN VDC	MAX VDC
1	EXHAUST	E1	KEF-1 - COMBI-OVENS	Z1	-	2940	YES	1	-	54	-	-
2	EXHAUST	E2	KEF-2 - GRIDDLE	Z1	-	1610	NO	-	-	-	-	9.2
3	EXHAUST	E3	KEF-3 - FRYER	Z1	-	862	NO	-	-	-	-	9.4
4	SUPPLY	S1	MUA-1	Z1	-	4188	NO	-	-	-	-	10.0

NOTES:
1. THE INFORMATION PRESENTED HERE IS PROVIDED FOR REFERENCE AND COORDINATION ONLY.
2. THE KITCHEN EXHAUST HOODS AND FANS ARE FURNISHED BY THE OWNER, AND INSTALLED BY THE MECHANICAL CONTRACTOR.
3. FOR QUESTIONS REGARDING THE INSTALLATION REQUIREMENTS, CONTACT MR. MARK HAMILTON WITH ACCUREX AT 214.632.7239.

1

CHILIS - TOOELE UT
CC-1
PROJECT 8/28/2024
MARK

ACCUREX NORTH TX - 1898
MARK HAMILTON
MARK.HAMILTON@ACCUREX.COM
(214)632-7239

ACCUREX

ENGINEER:
BRIAN E. CHANDLER, PE
6201 CAMPUS CIRCLE DRIVE E.
IRVING, TEXAS 75038
TEL: 972.870.1288
WWW.IDSTUDIO4.COM
E-MAIL: bchandler@idstudio4.com

CORPORATE:
BRINKER RESTAURANT CORPORATION, A VIRGINIA CORPORATION
3000 OLYMPUS BLVD.
DALLAS, TEXAS 75019
972.980.9917
www.brinker.com

09/23/2024
ISSUE FOR BID
THESE DOCUMENTS ARE FOR BIDDING PURPOSES ONLY. DO NOT USE FOR CONSTRUCTION.

RESTAURANT #CH1679
PROTOTYPE 18.5FS

CHILI'S TOOELE
951 N MAIN STREET
TOOELE, UT 84074

CLIENT: BRINKER RESTAURANT CORP., A VIRGINIA CORPORATION

DATE	DESCRIPTION
6/27/2024	ISSUE FOR PERMIT
9/23/2024	ISSUE FOR BID

	DATE	DESCRIPTION
1	08.07.2024	CITY COMMENTS

PROJECT NUMBER:
CHI24007

SHEET TITLE:
ACCUREX DRAWINGS

SHEET NUMBER:
M511

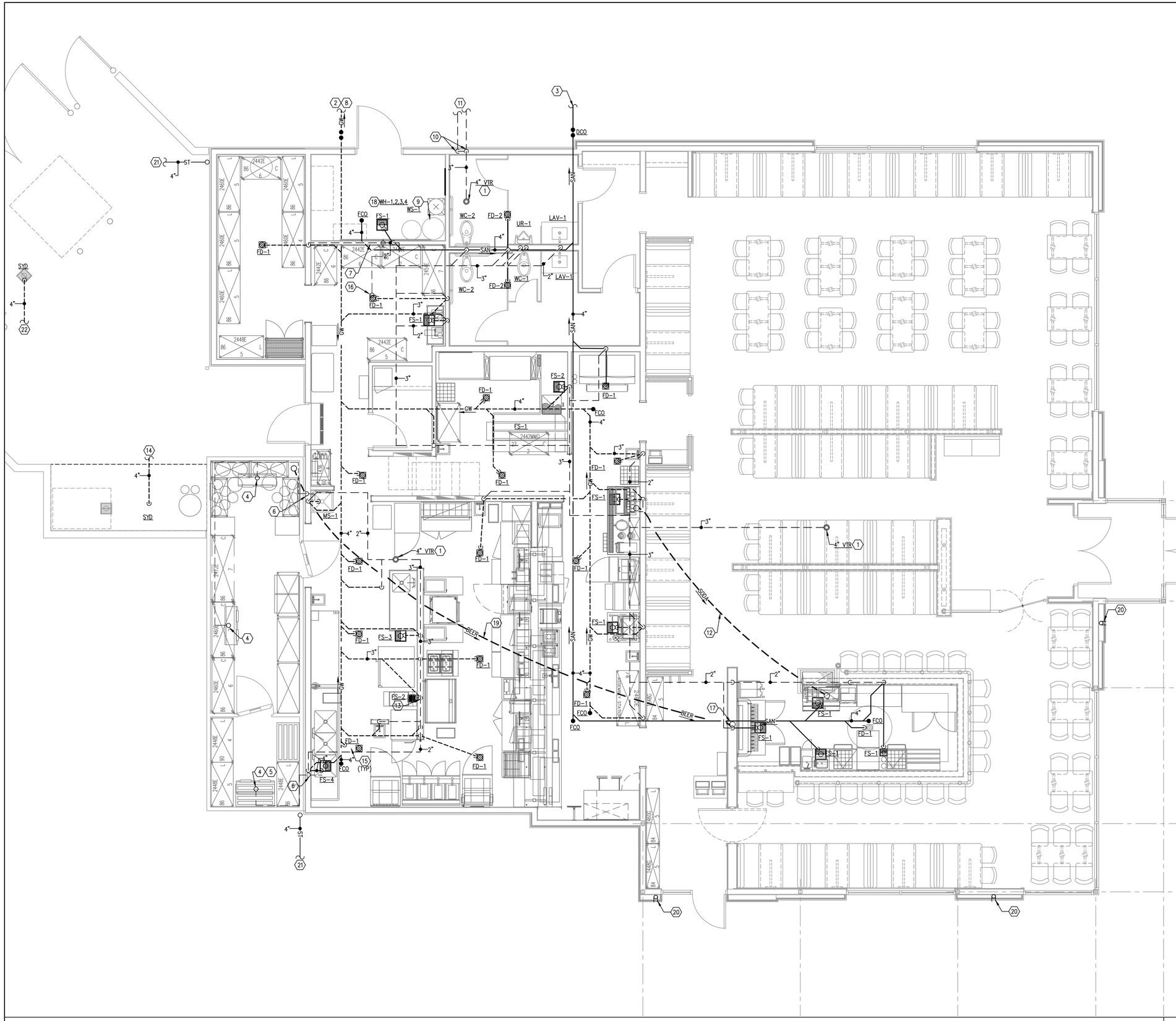

PLUMBING SANITARY PLAN
1/4"=1'-0"

1

GENERAL NOTES

A. KEY NOTES WITH ELLIPTICAL SYMBOL AND NUMBER CORRESPOND TO KITCHEN EQUIPMENT SHOWN IN KITCHEN PLAN SHEETS. REFER TO THE FOOD SERVICE SHEETS FOR SUPPLEMENTAL INFORMATION.

B. ALL EXPOSED PIPING IN PUBLIC AREAS SHALL BE INSTALLED AS TIGHT AS POSSIBLE TO THE WARM SIDE OF THE EXPOSED STRUCTURE.

C. THE INSTALLATION OF THE PLUMBING SYSTEMS SHALL BE COORDINATED WITH ALL ELECTRICAL AND MECHANICAL EQUIPMENT, AND STRUCTURAL SLAB AND FRAMING.

D. REFER TO PLUMBING SHEET P402 FOR PLUMBING FIXTURE AND EQUIPMENT SCHEDULES INCLUDING SPECIFICATIONS AND ROUGH-IN SIZES.

E. REFER TO THE KITCHEN DRAWINGS PREPARED BY THE KITCHEN EQUIPMENT SUPPLIER FOR ADDITIONAL INFORMATION NOT SHOWN ON THIS SHEET.

F. PLUMBING CONTRACTOR SHALL COORDINATE WITH THE KITCHEN EQUIPMENT SUPPLIER FOR THE COMPLETE INSTALLATION AND SERVICE CONNECTIONS OF ALL KITCHEN EQUIPMENT.

G. PLUMBING CONTRACTOR SHALL BE RESPONSIBLE FOR THE COMPLETE INSTALLATION OF ALL DRAIN LINES FROM KITCHEN EQUIPMENT. REFER TO THE KITCHEN DRAWINGS FOR PROPOSED SIZES AND ROUTING. ALL INDIRECT DRAIN LINES SHALL BE INSTALLED WITH APPROVED AIR GAPS.

H. REFER TO ARCHITECTURAL AND MILLWORK DRAWINGS FOR DETAILS OF COUNTERTOPS, CASEWORK, AND OTHER FIXTURES, SHOWING EXACT LOCATION OF OPENINGS FOR PLUMBING ITEMS BEING INSTALLED. COORDINATE THE COMPLETE INSTALLATION WITH THE GENERAL CONTRACTOR.

I. THE PROPOSED ROUTING AND SIZES OF SODA SLEEVE LINES ARE SHOWN ON THE KITCHEN DRAWINGS. THE PLUMBING CONTRACTOR SHALL BE RESPONSIBLE FOR THEIR COMPLETE INSTALLATION AND COORDINATION WITH OTHER DISCIPLINES.

J. REFER TO THE ARCHITECTURAL AND STRUCTURAL DRAWINGS FOR CHANGES IN THE BUILDING FINISHED FLOOR ELEVATIONS. COORDINATE SANITARY INVERT ELEVATIONS IN THE FIELD.

K. PLUMBING CONTRACTOR TO ARRANGE AND PAY FOR ALL REQUIRED FEES, PERMITS, AND MISCELLANEOUS COSTS ASSOCIATED WITH THE PLUMBING WORK PER LOCAL PLUMBING CODES.

L. PITCH ALL WASTE AND DRAIN LINES A MINIMUM OF 1/4" PER FOOT IN THE DIRECTION OF FLOW, OR AS REQUIRED BY LOCAL CODE.

M. ALL OPENINGS IN DWV SYSTEMS RESULTING FROM INSTALLATION ROUGH-IN SHALL BE PROTECTED WITH A TEST PLUG THAT IS SECURELY LOCKED IN PLACE UNTIL FINAL FINISHED CONNECTIONS ARE INSTALLED.

O. ALL PENETRATIONS IN FIRE RATED WALL ASSEMBLIES SHALL BE SEALED WITH UL LISTED FIRE STOPPING MATERIAL.

P. PERIMETER AND INTERIOR GRADE BEAMS ARE NOT TO BE CUT. REFERENCE SHELL BUILDING STRUCTURAL DRAWINGS FOR GRADE BEAM LOCATIONS.

Q. ALL HORIZONTAL VENT PIPING SHALL BE INSTALLED ABOVE THE BOTTOM CHORD OF THE STRUCTURAL JOISTS.

KEYED NOTES

1. ROUTE VENT UP TO VTR. COORDINATE ROOF PENETRATION LOCATION WITH OUTDOOR AIR INTAKE OF ROOFTOP EQUIPMENT. MAINTAIN A MINIMUM HORIZONTAL CLEARANCE OF 10'-0".
2. REFER TO CIVIL PLANS FOR CONTINUATION OF UNDERGROUND GREASE WASTE PIPING. COORDINATE PROPOSED ROUTING WITH SITE UTILITIES, GRADING, LANDSCAPING AND CONCRETE WORK.
3. REFER TO CIVIL PLANS FOR CONTINUATION OF UNDERGROUND SANITARY WASTE PIPING. COORDINATE PROPOSED ROUTING WITH SITE UTILITIES, GRADING, LANDSCAPING AND CONCRETE WORK.
4. ROUTE WALK-IN COOLER/ FREEZER CONDENSATE DRAIN LINE AS HIGH AS POSSIBLE AND ALONG WALLS AS SHOWN. INSULATE ALL CONDENSATE PIPING AND PITCH A MINIMUM OF 1/4" PER FOOT IN THE DIRECTION OF FLOW. SEAL ALL COOLER WALL PENETRATIONS WATER TIGHT AND COVER EACH WITH AN ESCUTCHEON PLATE. PROVIDE FULL SIZE TRAP AND EXTEND ABOVE FLOOR AND BEHIND EQUIPMENT FOR AN INDIRECT CONNECTION TO AN APPROVED RECEPTOR.
5. CONDENSATE DRAIN LINE IN THE WALK-IN FREEZER SHALL BE HEAT TRACED TO PREVENT FREEZING. HEAT TRACE TAPE SHALL BE PROVIDED BY THE PLUMBING CONTRACTOR.
6. ROUTE CONDENSATE DRAIN LINE DOWN WALL & EXTEND ABOVE FLOOR AND BEHIND EQUIPMENT FOR AN INDIRECT CONNECTION TO AN APPROVED RECEPTOR.
7. ROUTE HVAC CONDENSATE DRAIN LINE AS HIGH AS POSSIBLE AND ALONG WALLS AS SHOWN. INSULATE ALL CONDENSATE PIPING AND PITCH A MINIMUM OF 1/4" PER FOOT IN THE DIRECTION OF FLOW. PROVIDE FULL SIZE TRAP AND EXTEND ABOVE FLOOR AND BEHIND EQUIPMENT FOR AN INDIRECT CONNECTION TO AN APPROVED RECEPTOR.
8. REFER TO CIVIL PLANS FOR PROPOSED LOCATION OF THE PRECAST CONCRETE GREASE INTERCEPTOR.
9. ROUTE BACKWASH DRAIN LINE FROM WATER SOFTENER ASSEMBLY TO INDIRECT TERMINATION AT THE APPROVED RECEPTOR.
10. 3" VENTS FROM GREASE INTERCEPTOR. CONNECT AT 42" A.F.F. PROVIDE WALL CLEANOUT IN EACH VENT. DO NOT CONNECT INTERCEPTOR VENTS TO BUILDING VENT. FIELD VERIFY EXISTING CONDITIONS AND COORDINATE WITH CIVIL.
11. 3" VENTS FROM GREASE INTERCEPTOR. REFER TO SHEET MPE101 FOR CONTINUATION.
12. PROVIDE A 6"ø PVC SLEEVE FOR ROUTING OF SODA LINES FROM THE BACK OF HOUSE TO THE RESPECTIVE BEVERAGE STATION AS SHOWN. THE SLEEVE SHALL BE LOCATED 60" BELOW THE FINISHED SLAB TO AVOID CONFLICT WITH DWV PIPING, AND BE INSTALLED WITH STRAIGHT RUNS AND 90° FULL RADIUS SWEEPS. 45° ELBOWS ARE NOT ALLOWED.
13. ANY DWV PIPING IN COOKLINE WALL WITHIN 18" OF THE TYPE 1 EXHAUST HOOD SHALL BE CAST IRON.
14. 4" GREASE WASTE LINE FROM SERVICE YARD DRAIN, FOR CONTINUATION REFER TO SITE PLAN SHEET MPE101.
15. FIXTURE DRAIN IS CONNECTED TO A HORIZONTAL BRANCH DRAIN AND IS CONSIDERED CIRCUIT VENTED PER SECTION 914.1 OF THE 2018 IPC.
16. ROUTE HVAC CONDENSATE DRAIN LINE DOWN THROUGH ROOF AND RUN AS HIGH AS POSSIBLE. INSULATE ALL CONDENSATE PIPING AND PITCH A MINIMUM OF 1/4" PER FOOT IN THE DIRECTION OF FLOW.
17. BEER LINES UP FROM BELOW SLAB WITH 12 BEER LINES AND GLYCOL LOOP FROM WALK IN BEER COOLER TO BEER TOWER.
18. EXTEND T&P VALVE DRAIN LEADER (3/4" MIN.) AND TERMINATE WITH AN APPROVED INDIRECT CONNECTION AT FLOOR SINK. COORDINATE ROUTING IN THE FIELD.
19. PROVIDE A 6"ø PVC SLEEVE FOR ROUTING OF BEER LINES FROM THE BACK OF HOUSE TO BEER TOWER AS SHOWN. THE SLEEVE SHALL BE LOCATED 60" BELOW THE FINISHED SLAB TO AVOID CONFLICT WITH DWV PIPING, AND BE INSTALLED WITH STRAIGHT RUNS AND 90° FULL RADIUS SWEEPS. 45° ELBOWS ARE NOT ALLOWED.
20. ROUTE THE 2" PRIMARY STORM LEADER DOWN BELOW THE FINISHED GRADE AND CONNECT TO THE SITE STORM DRAIN PIPING. REFER TO CIVIL PLANS FOR ADDITIONAL INFORMATION.
21. ROUTE THE 4" PRIMARY STORM LEADER DOWN BELOW THE FINISHED GRADE AND CONNECT TO THE SITE STORM DRAIN PIPING. REFER TO CIVIL PLANS FOR ADDITIONAL INFORMATION.
22. 4" AREA DRAIN FOR SERVICE YARD TO BE ROUTED TO STORM. REFER TO CIVIL FOR CONTINUATION.

ENGINEER:

BRIAN E. CHANDLER, PE

6201 CAMPUS CIRCLE DRIVE E.
IRVING, TEXAS 75038
TEL: 972.870.1288
WWW.IDSTUDIO4.COM
E-MAIL: bchandler@idstudio4.com

CORPORATE:
BRINKER RESTAURANT CORPORATION,
A VIRGINIA CORPORATION
3000 OLYMPUS BLVD.
DALLAS, TEXAS 75019
972.980.9917
www.brinker.com

09/23/2024
ISSUE FOR BID
THESE DOCUMENTS ARE FOR BIDDING PURPOSES ONLY. DO NOT USE FOR CONSTRUCTION.

RESTAURANT #CH1679
PROTOTYPE 18.5FS

CHILI'S TOOELE
951 N MAIN STREET
TOOELE, UT 84074

CLIENT: BRINKER RESTAURANT CORP.
A VIRGINIA CORPORATION

DATE	DESCRIPTION
6/27/2024	ISSUE FOR PERMIT
9/23/2024	ISSUE FOR BID

△	DATE	DESCRIPTION

PROJECT NUMBER:
CHI24007

SHEET TITLE:
PLUMBING SANITARY PLAN

SHEET NUMBER:
P101

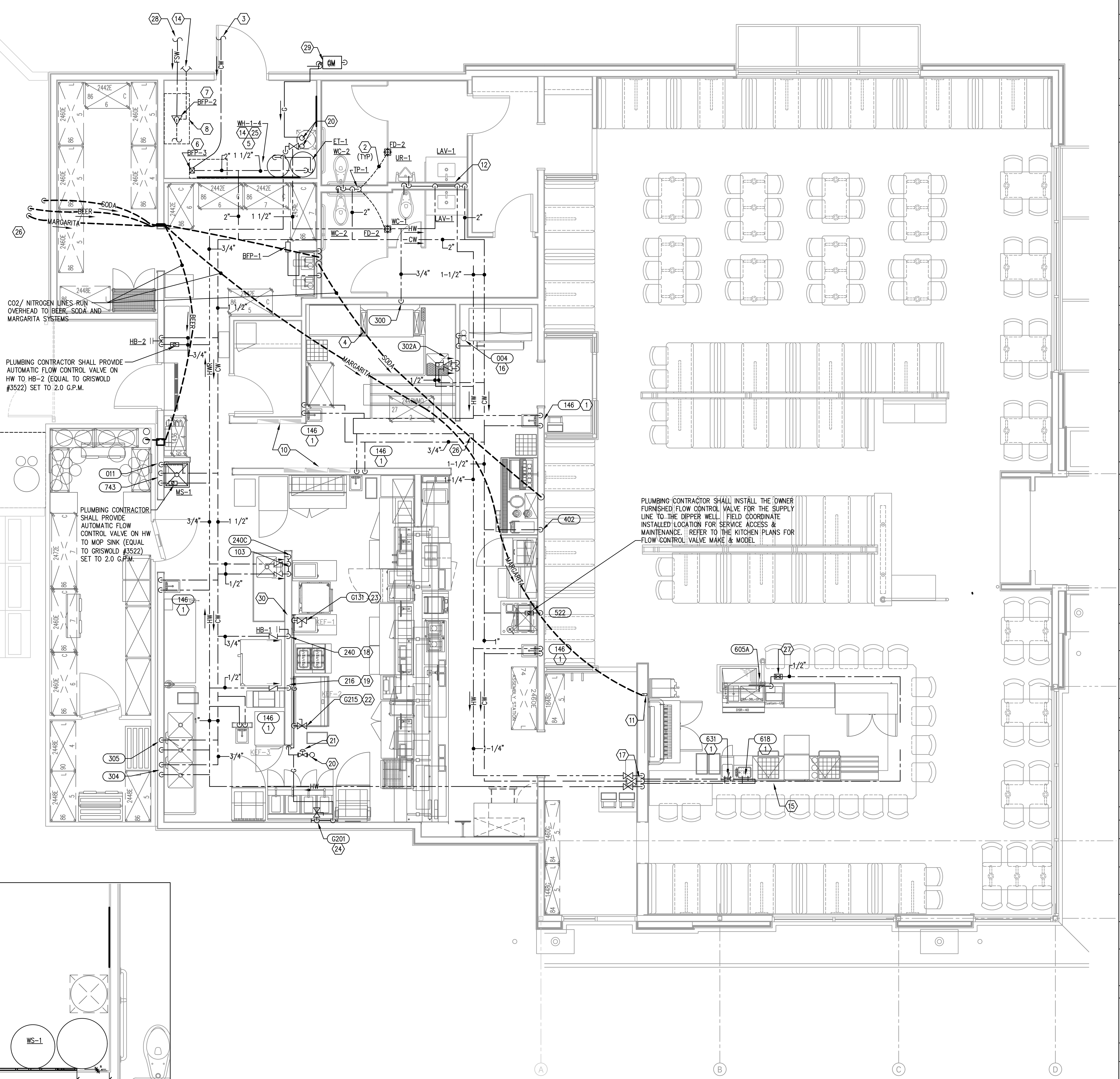

PLUMBING WATER AND GAS PLAN 1
1/4"=1'-0"

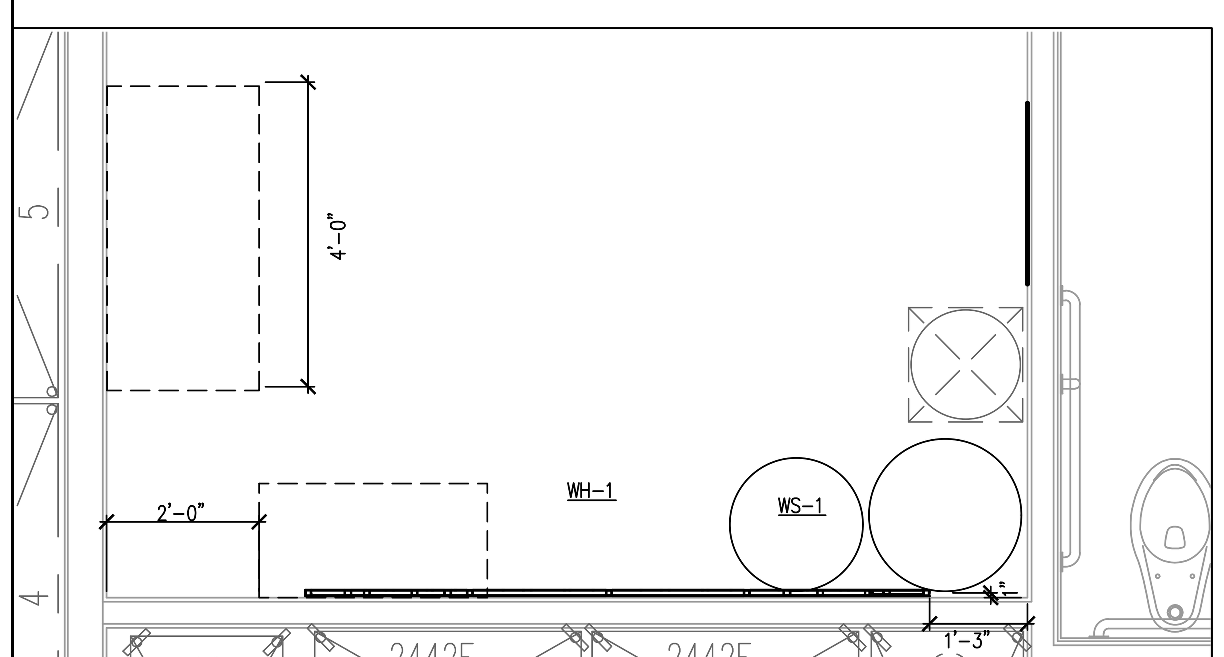

MECHANICAL ROOM PLUMBING EQUIPMENT 2
1/2"=1'-0"

GENERAL NOTES

A. KEY NOTES WITH ELLIPTICAL SYMBOL AND NUMBER CORRESPOND TO KITCHEN EQUIPMENT SHOWN IN KITCHEN PLAN SHEETS. REFER TO THE FOOD SERVICE SHEETS FOR SUPPLEMENTAL INFORMATION.

B. ALL EXPOSED PIPING IN PUBLIC AREAS SHALL BE INSTALLED AS TIGHT AS POSSIBLE TO THE WARM SIDE OF THE EXPOSED STRUCTURE.

C. THE INSTALLATION OF THE PLUMBING SYSTEMS SHALL BE COORDINATED WITH ALL ELECTRICAL AND MECHANICAL EQUIPMENT, AND STRUCTURAL SLAB AND FRAMING.

D. REFER TO PLUMBING SHEET P402 FOR PLUMBING FIXTURE AND EQUIPMENT SCHEDULES INCLUDING SPECIFICATIONS AND ROUGH-IN SIZES.

E. REFER TO THE KITCHEN DRAWINGS PREPARED BY THE KITCHEN EQUIPMENT SUPPLIER FOR ADDITIONAL INFORMATION NOT SHOWN ON THIS SHEET.

F. PLUMBING CONTRACTOR SHALL COORDINATE WITH THE KITCHEN EQUIPMENT SUPPLIER FOR THE COMPLETE INSTALLATION AND SERVICE CONNECTIONS OF ALL KITCHEN EQUIPMENT.

G. PLUMBING CONTRACTOR SHALL BE RESPONSIBLE FOR THE COMPLETE INSTALLATION OF ALL WATER LINES TO KITCHEN EQUIPMENT. REFER TO THE KITCHEN DRAWINGS FOR PROPOSED SIZES AND ROUTING. ALL WATER LINES UNDER EQUIPMENT/ MILLWORK SHALL BE INSTALLED SECURELY.

H. REFER TO ARCHITECTURAL AND MILLWORK DRAWINGS FOR DETAILS OF COUNTERTOPS, CASEWORK, AND OTHER FIXTURES, SHOWING EXACT LOCATION OF OPENINGS FOR PLUMBING ITEMS BEING INSTALLED. COORDINATE THE COMPLETE INSTALLATION WITH THE GENERAL CONTRACTOR.

I. PLUMBING CONTRACTOR TO FLUSH AND SANITIZE ALL WATER LINES PRIOR TO THE INSTALLATION OF THE FILTRATION SYSTEM.

J. ALL WALL PIPING STUB-OUTS SHALL BE SECURELY TIED TO THE STRUCTURE WITH SUFFICIENT BACKING TO ELIMINATE MOVEMENT. FINAL CONNECTIONS TO KITCHEN SINKS SHALL BE HARD PIPED.

L. ALL FIXTURES AND EQUIPMENT SHALL BE INSTALLED WITH WATER SUPPLY STOP VALVES IN ACCESSIBLE LOCATIONS. PROVIDE LINE SIZED BALL VALVES FOR BEVERAGE FIXTURES.

M. PROVIDE PIPE SUPPORTS AND EXPANSION LOOPS AS REQUIRED.

N. PLUMBING CONTRACTOR TO ARRANGE AND PAY FOR ALL REQUIRED FEES, PERMITS, AND MISCELLANEOUS COSTS ASSOCIATED WITH THE PLUMBING WORK PER LOCAL PLUMBING CODES.

O. ALL PENETRATIONS IN FIRE RATED WALL ASSEMBLIES SHALL BE SEALED WITH UL LISTED FIRE STOPPING MATERIAL.

KEYED NOTES

1. 1/2" HW & CW DOWN IN WALL. PROVIDE TEMPERATURE MIXING VALVE AS SCHEDULED ON SHEET P402.
2. 1/2" CW BELOW FLOOR, FROM TRAP PRIMER TO RECEPTOR.
3. 2" DOMESTIC COLD WATER, PLUMBING CONTRACTOR TO TAP OFF OF INCOMING COMBINATION RISER BEFORE FIRE BACKFLOW ASSEMBLY. COORDINATE WITH DULY LICENSED FIRE SPRINKLER CONTRACTOR.
4. PROVIDE A 6"ø PVC SLEEVE FOR ROUTING OF SODA LINES TO THE RESPECTIVE BEVERAGE STATION AS SHOWN. THE SLEEVE ROUTING SHALL BE MADE ABOVE THE FINISHED CEILING, AS HIGH AS POSSIBLE TIGHT TO THE BOTTOM OF THE ROOF STRUCTURE. 45° ELBOWS ARE NOT ALLOWED. REFER TO THE FOOD SERVICE SHEETS FOR EXACT ROUTING AND ADDITIONAL INFORMATION FOR THE COMPLETE INSTALLATION.
5. FLOOR MOUNTED GAS FIRED TANK TYPE WATER HEATING SYSTEM.
6. PLUMBING CONTRACTOR TO ROUTE THE 2" DOMESTIC WATER SERVICE FROM COMBINATION RISER IN THE MECHANICAL ROOM TO 18"x3' CLEARANCE FOOTPRINT, COMPLETE WITH METER, MAIN SHUT OFF VALVE, AND BACKFLOW PREVENTOR.
7. PLUMBING CONTRACTOR SHALL ROUGH-IN THE 6" COMBINATION WATER SERVICE TO THE MECHANICAL ROOM. THE COMPLETE RISER TO SERVE DOMESTIC, IRRIGATION, AND FIRE. REFER TO DETAILS.
8. 48"X24" RISER FOOTPRINT SHOWN FOR AVAILABLE CLEARANCE OF THE FIRE RISER ASSEMBLY (REDUCED FROM 4" SERVICE AS VERIFIED BY HYDRAULIC CALCULATIONS PREPARED BY A DULY LICENSED FIRE SPRINKLER CONTRACTOR).
9. THE WATER SOFTENER SHALL BE FURNISHED WITH THE KITCHEN EQUIPMENT PACKAGE, AND INSTALLED COMPLETE AS SHOWN 1" OFF THE WALL BY THE PLUMBING CONTRACTOR. THE WATER SOFTENER ASSEMBLY SHALL BE USED FOR SUPPLY TO THE WATER HEATERS.
10. PROPOSED ELECTRICAL PANEL LOCATION. NO PIPING SHALL BE INSTALLED ABOVE OR BELOW THE CEILING AT THIS LOCATION.
11. 2"ø PVC TO RUN DOWN IN WALL FROM CEILING AND STUB OUT 10" AFF BLENDED CO2 & NITROGEN INLINE WITH MARGARITA TOWER. REFER TO K211 FOR COMPLETE INSTALLATION OF CO2 LINES.
12. ROUTE 1/2" HW & CW TO HAND WASHING FIXTURE. INSTALL SUPPLIES COMPLETE WITH HOT WATER TEMPERING VALVE. REFER TO DETAIL 1/P303 FOR ROUTING OF HW LOOP DOWN TO LAVATORIES.
13. ROUTE 1/2" HW & CW TO FOUR COMPARTMENT SINK FIXTURE. INSTALL SUPPLIES COMPLETE WITH STOPS.
14. PROVIDE INLINE HOT WATER RECIRCULATION PUMP AND CHECK VALVE ASSEMBLY IN THE MECHANICAL ROOM. INSTALL TIGHT TO WALL 96" AFF.
15. ROUTE WATER DISTRIBUTION PIPING IN BAR DIE WALL, 12" A.F.F.
16. INSTALL OWNER FURNISHED WATER FILTER ASSEMBLY FOR FINAL CONNECTION. FILTER TO BE INSTALLED AT 72" AFF TO BOTTOM OF ASSEMBLY.
17. (1)1/2" HW & (1)1" CW LINES DOWN IN WALL AND EXTEND PIPING IN DIE BAR WALL.
18. PROVIDE 3/4" CW TO HB-1 WITH ATMOSPHERIC VACUUM BREAKER FOR COMBI-OVEN. ROUTE 1/2" CW TO DCVA OR RPZ AT RO FILTER AT 24" AFF. VENDER WILL FURNISH FILTER & MAKE FINAL CONNECTIONS. COORDINATE WITH VENDOR. FIELD VERIFY EXACT LOCATION OF EQUIPMENT.
19. 1/2" HW DOWN IN WALL TO RETHERMALIZER CONNECTION AT APPROX. 30" A.F.F.
20. GAS PIPING TO BE ROUTED UP WALL TO ROOF. REFER TO MPE201 FOR CONTINUATION OF PIPING ON ROOF.
21. MECHANICAL GAS ANSUL VALVE TO BE INSTALLED ABOVE LAY IN CEILING IN AN ACCESSIBLE LOCATION. EXTEND GAS DOWN FOR COOKING APPLIANCES TO FULL SIZED MANIFOLD 36" AFF, INSTALLED TIGHT TO WALL.
22. 3/4"G COMPLETE W/ SOC AND UNION (120 MBH) FOR GRIDDLE. FLEXIBLE HOSE CONNECTION WITH QUICK DISCONNECT PROVIDED BY KEC AND INSTALLED BY PLUMBING CONTRACTOR.
23. 3/4"G COMPLETE W/ SOC AND UNION (89 MBH) FOR IMPINGER. FLEXIBLE HOSE CONNECTION WITH QUICK DISCONNECT PROVIDED BY KEC AND INSTALLED BY PLUMBING CONTRACTOR.
24. 1-1/4"G COMPLETE W/ SOC AND UNION (300 MBH) FOR FRYER ASSEMBLY. FLEXIBLE HOSE CONNECTION WITH QUICK DISCONNECT PROVIDED BY KEC AND INSTALLED BY PLUMBING CONTRACTOR.
25. ROUTE COMBUSTION AIR INTAKE/ EXHAUST PIPING FROM THE WATER HEATER TO TERMINATION LOCATIONS ON THE ROOF. INSTALL WITH THE MINIMUM ELBOWS AND OFFSETS AS NECESSARY FOR A COMPLETE INSTALLATION PER THE WATER HEATER MANUFACTURER'S INSTRUCTIONS.
26. REFER TO K211 FOR COMPLETE INSTALLATION OF CO2 LINES
27. ROUTE 1/2" COLD WATER LINE FOR GLASS RINSER. SHUT OFF VALVE TO BE INSTALLED AT ACCESSIBLE LOCATION BEHIND GLASSWARE DOLLY AS SHOWN, IN RECESSED VALVE BOX (OATEY #39156 RECESSED SQUARE ICE MAKER OUTLET BOX) AT 14" A.F.F. REFER TO ARCHITECTURAL AND K211 FOR ADDITIONAL INFORMATION.
28. COMBINATION WATER LINE SERVICE, FOR CONTINUATION REFER TO SHEET MPE101.
29. ROUTE THE 1 1/4" (2.0 PSI) GAS SERVICE PIPING THROUGH MECHANICAL ROOM AND UP TO ROOF FOR ROOF MOUNTED DISTRIBUTION. EXPOSED PIPING SHALL BE PAINTED TO MATCH THE EXTERIOR WALL FINISH. REFER TO MEP1.0 FOR CONTINUATION OF PIPING ON ROOF.
30. ALL WATER PIPING IN THE COOKLINE WALL WITHIN 18" OF THE TYPE 1 EXHAUST HOOD SHALL BE INSTALLED AS RIGID COPPER PIPE. NO PLASTIC TUBING ALLOWED.

ENGINEER:
BRIAN E. CHANDLER, PE
6201 CAMPUS CIRCLE DRIVE E.
IRVING, TEXAS 75038
TEL: 972.870.1288
WWW.IDSTUDIO4.COM
E-MAIL: bchandler@idstudio4.com

CORPORATE:
BRINKER RESTAURANT CORPORATION, A VIRGINIA CORPORATION
3000 OLYMPUS BLVD.
DALLAS, TEXAS 75019
972.980.9917
www.brinker.com

09/23/2024
ISSUE FOR BID
THESE DOCUMENTS ARE FOR BIDDING PURPOSES ONLY. DO NOT USE FOR CONSTRUCTION.

RESTAURANT #CHI1679
PROTOTYPE 18.5FS

CHILI'S TOOELE
951 N MAIN STREET
TOOELE, UT 84074

CLIENT: BRINKER RESTAURANT, CORP. A VIRGINIA CORPORATION

DATE	DESCRIPTION
6/27/2024	ISSUE FOR PERMIT
9/23/2024	ISSUE FOR BID

△	DATE	DESCRIPTION

PROJECT NUMBER:
CHI24007

SHEET TITLE:
PLUMBING WATER AND GAS PLAN

SHEET NUMBER:
P102

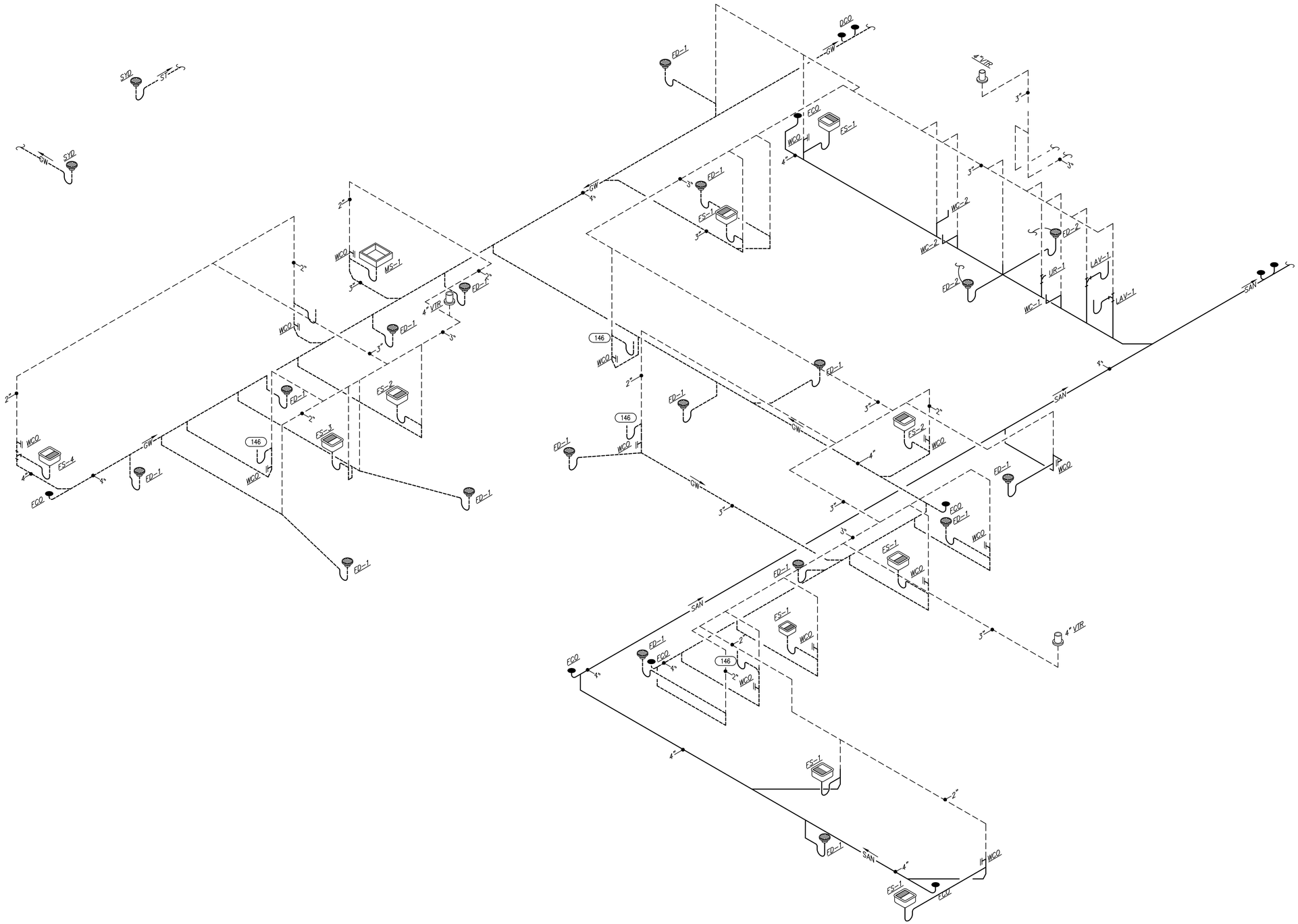

DWV RISER DIAGRAM
NO SCALE

1

ENGINEER:

BRIAN E. CHANDLER, PE

6201 CAMPUS CIRCLE DRIVE E.
IRVING, TEXAS 75038
TEL: 972.870.1288
WWW.IDSTUDIO4.COM
E-MAIL: bchandler@idstudio4.com

CORPORATE:
BRINKER RESTAURANT CORPORATION,
A VIRGINIA CORPORATION
3000 OLYMPUS BLVD.
DALLAS, TEXAS 75019
972.980.9917
www.brinker.com

09/23/2024
ISSUE FOR BID
THESE DOCUMENTS ARE FOR BIDDING PURPOSES ONLY. DO NOT USE FOR CONSTRUCTION.

RESTAURANT #CH1679
PROTOTYPE 18.5FS

CHILI'S
TOOELE
951 N MAIN STREET
TOOELE, UT 84074

CLIENT: BRINKER RESTAURANT CORP.
A VIRGINIA CORPORATION

DATE	DESCRIPTION
6/27/2024	ISSUE FOR PERMIT
9/23/2024	ISSUE FOR BID

	DATE	DESCRIPTION

PROJECT NUMBER:
CHI24007

SHEET TITLE:
DWV RISER DIAGRAMS

SHEET NUMBER:
P201

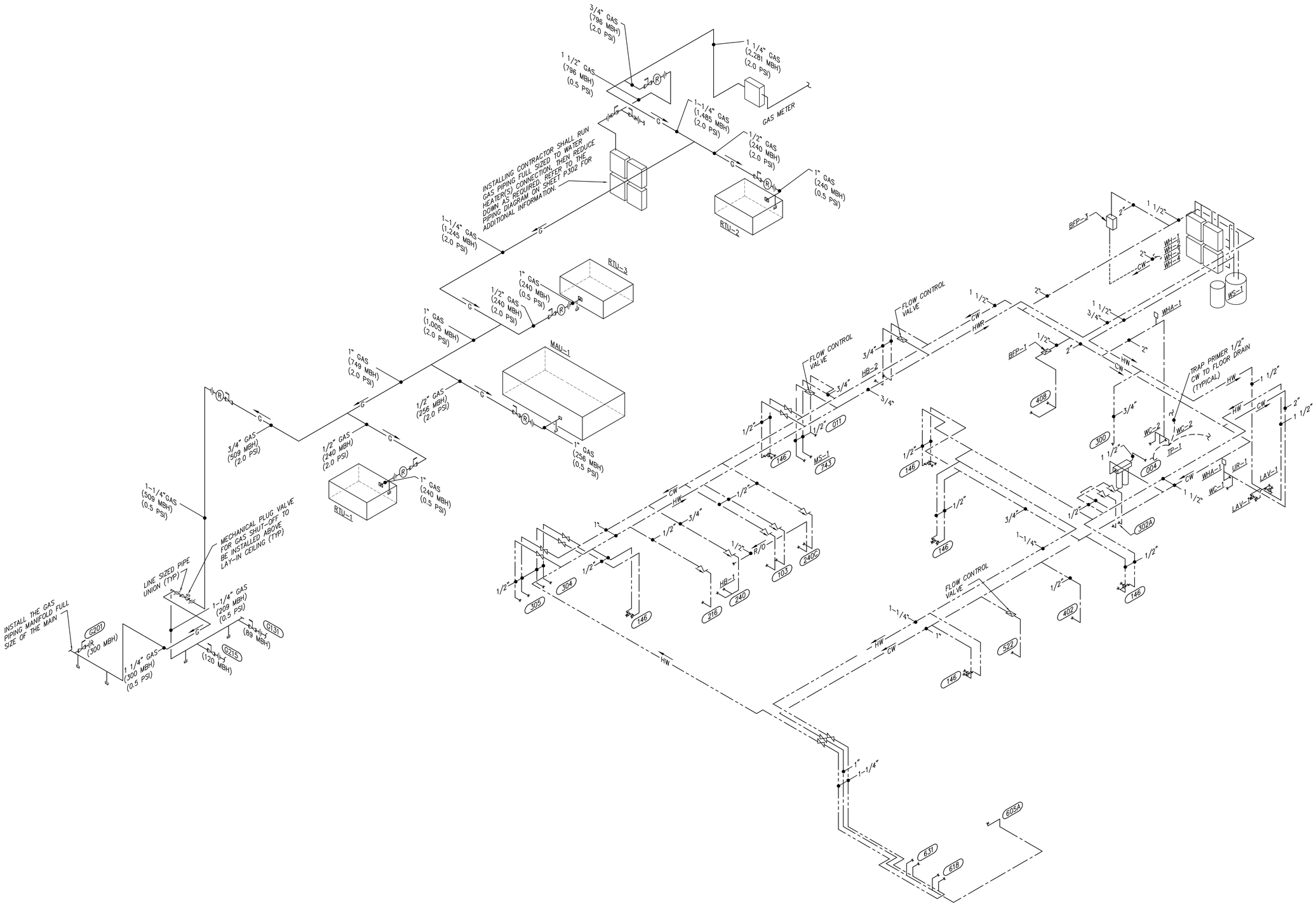

WATER & GAS RISER DIAGRAMS
NO SCALE

1

ENGINEER:

BRIAN E. CHANDLER, PE

6201 CAMPUS CIRCLE DRIVE E.
IRVING, TEXAS 75038
TEL: 972.870.1288
WWW.IDSTUDIO4.COM
E-MAIL: bchandler@idstudio4.com

CORPORATE:
BRINKER RESTAURANT CORPORATION, A VIRGINIA CORPORATION
3000 OLYMPUS BLVD.
DALLAS, TEXAS 75019
972.980.9917
www.brinker.com

09/23/2024

ISSUE FOR BID

THESE DOCUMENTS ARE FOR BIDDING PURPOSES ONLY. DO NOT USE FOR CONSTRUCTION.

RESTAURANT #CH1679
PROTOTYPE 18.5FS

CHILI'S TOOELE
951 N MAIN STREET
TOOELE, UT 84074

CLIENT: BRINKER RESTAURANT CORP. A VIRGINIA CORPORATION

DATE	DESCRIPTION
6/27/2024	ISSUE FOR PERMIT
9/23/2024	ISSUE FOR BID

	DATE	DESCRIPTION
1	08.07.2024	CITY COMMENTS

PROJECT NUMBER:
CHI24007

SHEET TITLE:
WATER & GAS RISER DIAGRAMS

SHEET NUMBER:
P202

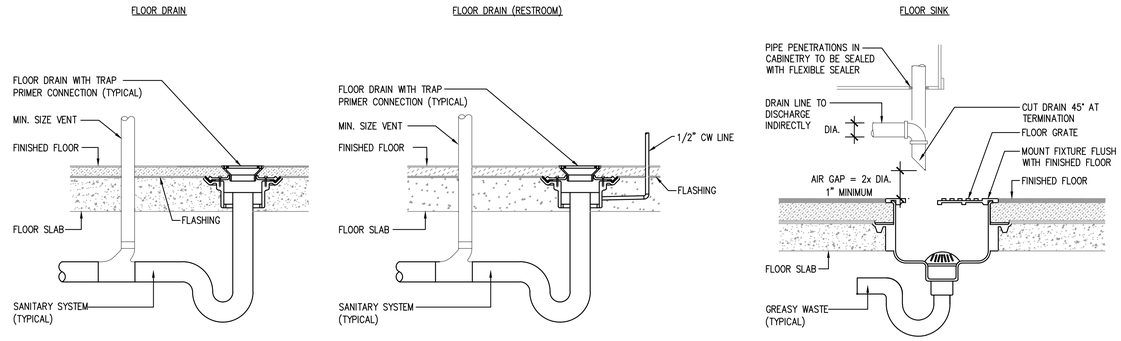

DRAIN DETAILS 1
SCALE: NONE

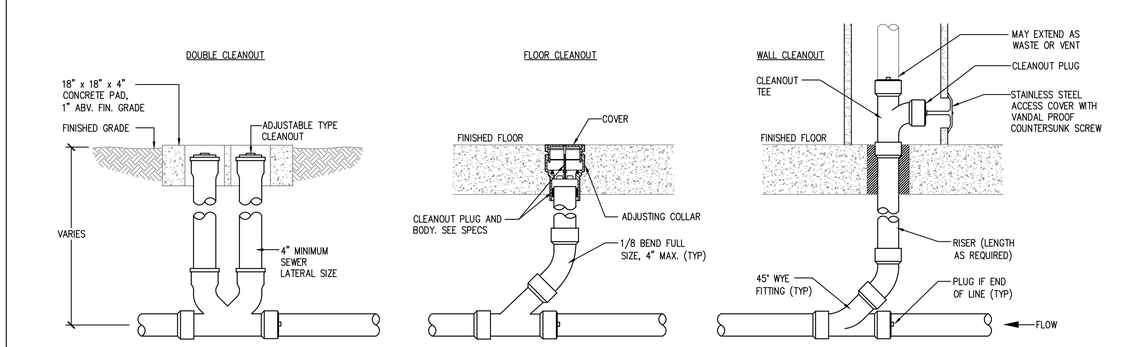

CLEANOUT DETAILS 2
SCALE: NONE

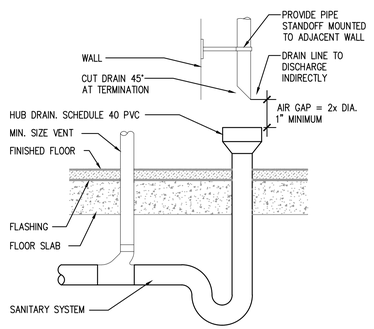

HUB DRAIN DETAIL 3
SCALE: NONE

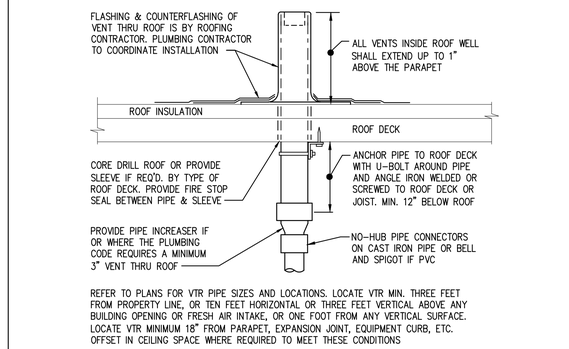

REFER TO PLANS FOR VTR PIPE SIZES AND LOCATIONS. LOCATE VTR MIN. THREE FEET FROM PROPERTY LINE, OR TEN FEET HORIZONTAL OR THREE FEET VERTICAL ABOVE ANY BUILDING OPENING OR FRESH AIR INTAKE, OR ONE FOOT FROM ANY VERTICAL SURFACE. LOCATE VTR MINIMUM 18" FROM PARAPET, EXPANSION JOINT, EQUIPMENT CURB, ETC. OFFSET IN CEILING SPACE WHERE REQUIRED TO MEET THESE CONDITIONS

VENT THROUGH ROOF DETAIL 4
SCALE: NONE

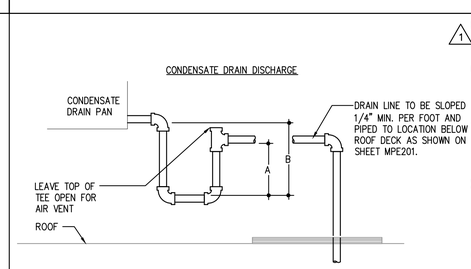

NOTES:
1. FILL TRAP MANUALLY ON INITIAL START-UP.
2. TRAP EACH COMPONENT DRAIN CONNECTION.
3. A = NEGATIVE STATIC PRESSURE = 2"
4. B = 2x NEGATIVE STATIC PRESSURE = 4"

HVAC CONDENSATE CONNECTION DETAIL 5
SCALE: NONE

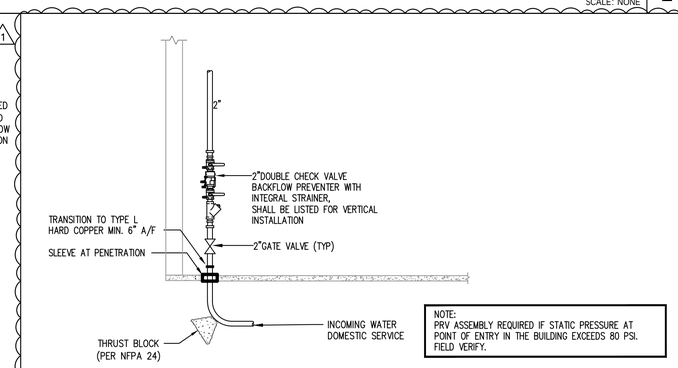

NOTE:
PRV ASSEMBLY REQUIRED IF STATIC PRESSURE AT POINT OF ENTRY IN THE BUILDING EXCEEDS 80 PSI. FIELD VERIFY.

DOMESTIC COLD WATER RISER DETAIL 6
SCALE: NONE

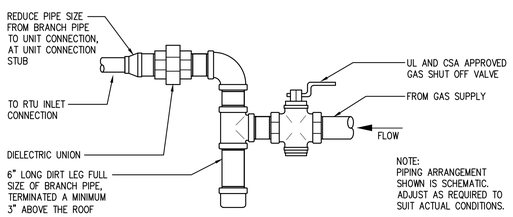

NOTE:
PIPING ARRANGEMENT SHOWN IS SCHEMATIC. ADJUST AS REQUIRED TO SUIT ACTUAL CONDITIONS.

NOTES:
1. PIPING ARRANGEMENT SHOWN IS SCHEMATIC. ADJUST AS REQUIRED TO SUIT ACTUAL CONDITIONS.
2. PIPING SHALL BE INSTALLED TO AVOID INTERFERENCE WITH MAINTENANCE ACCESS DOORS.

HVAC GAS CONNECTION DETAIL 7
SCALE: NONE

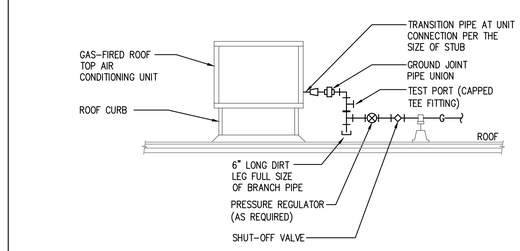

NOTES:
1. PIPING ARRANGEMENT SHOWN IS SCHEMATIC. ADJUST AS REQUIRED TO SUIT ACTUAL CONDITIONS.
2. PIPING SHALL BE INSTALLED TO AVOID INTERFERENCE WITH MAINTENANCE ACCESS DOORS.
3. DISTANCE BETWEEN PRESSURE REGULATOR AND DOWNSTREAM TEST PORT SHALL NOT BE INSTALLED LESS THAN 10 PIPE DIAMETERS.

HVAC GAS PIPING DETAIL 8
SCALE: NONE

1. SPACE RTB-01 ROOF TOP BLOX EVERY 7' ALONG PIPING ON FLAT OR LOW PITCH ROOF TOPS.
2. REMOVE ALL LOOSE AGGREGATE FROM UNDER BLOX BASE ON GRAVEL COVERED ROOF TOPS.
3. ALWAYS INSTALL LOADS AT THE LOWEST ELEVATION POSSIBLE AND CENTER LOAD ON BLOX FOR BEST STABILITY
4. FOR LOADS UNDER 250 LBS (113 KG) PER BLOX, THE PIPING MAY BE MOUNTED DIRECTLY ON BLOX TOP. USE THE PIPE SADDLES TO ORGANIZE PIPE ALWAYS KEEPING THE LOAD CENTRALIZED. FOR SHORT PIPING RUNS, USE THE SUPPLIED PERFORATED STRAP TO MOUNT PIPES UP TO 2" DIAMETER WITH #10 SHEET METAL SCREWS DRIVEN INTO INDENTS ON BLOX TOP. CONVENTIONAL PIPE CLIPS OF U-CLAMPS ARE ALSO OPTIONAL.
5. THE RTB-01 IS 4.5" HIGH; IF 6" BLOCK HEIGHT IS A REQUIREMENT, USE ACCESSORY XTB-02 HIEGHT EXTENSION OR 1.5" SLOTTED STEEL STRUT. THE XTB-02 MAY BE MOUNTED DIRECTLY TO BLOX WITH SCREWS PROVIDED. XTB-02 WILL LIFT PIPING AN ADDITIONAL 1.5" (MAX 250 LBS/113 KG) OR INSTALL THE XTB-02 ELEVATED ON THREADED RODS (MAX 100 LBS/45 KG). FOR PIPES LARGER THAN 3", ALWAYS USE STRUT TO ELEVATE PIPING.
6. TO INSTALL THREADED RODS, INSERT NUT INTO BLOX NUT SLOT, ADD JAMB NUT AND WASHER ONTO RODS AND THREAD RODS INTO BLOX BY 1" BUT NO MORE THAN 3". YOUR FINISH HEIGHT ADJUSTMENT CAN BE MADE AT THE BLOX NUT CONNECTION OR UPPER ROD FASTENING POINTS. USE A MAXIMUM 15 FT. LBS TORQUE ON BLOX TOP JAMB NUTS OR ROLLER MOUNTING BOLTS AND APPLY LOCKTITE® ON THREADS.
7. RTB-01 IS RATED FOR 350 LBS (158 KG) MAXIMUM STATIC LOADS. STR-04 STRUT MUST BE APPLIED FOR LOADS EXCEEDING 250 LBS.
8. FOR LOADS OVER 250 LBS PER BLOX, ALWAYS INSTALL STR-04 SLOTTED STRUT ON BLOX TOP BENEATH LOADS. MOUNT SLOTTED STRUT DIRECTLY ON BLOX WITH THREE #14 SHEET METAL SCREWS AND WASHERS. DRIVE SCREWS INTO BOSSES ON BLOX TOPS. STRUT MAY ALSO BE ELEVATED USING ROD-03 THREADED RODS.
9. FOR LONG PIPING RUNS, INSTALL ROL-05 OR ROL-06 ROLLERS OR OVERSIZED U-CLAMPS TO ALLOW FOR THERMAL EXPANSION / CONTRACTION OF PIPING.
10. EQUIPMENT ELEVATED ON A SINGLE BLOX SHOULD NEVER EXCEED 14" IN OVERALL HEIGHT. ON HEAVY, WIDE, OR ELEVATED PIPING RUNS AND TALL MOUNTED EQUIPMENT ALWAYS CONSIDER WINDLOADS AND CENTERS OF MASS. BE SURE AN INSTALLED SYSTEM IS NOT TOP HEAVY OR UNSTABLE IN ANY DIRECTION. TO STABILIZE ELEVATED LOADS, CONSTRUCT 2 OR 4 BLOX BRIDGE ASSEMBLIES USING STRUTS TO SPREAD AND STABILIZE BASE FOOTINGS. ADJUST EACH BLOX SO LOADS ARE EQUALLY DISTRIBUTED.
11. ONCE SYSTEM IS COMPLETE AND ALL COMPONENTS ARE INSTALLED, PERMANENTLY SECURE EACH BLOX IN PLACE BY APPLYING THE OPTIONAL ACCESSORY SCB-07 SECURING BRACKETS WITH ADH-12 ADHESIVE. BE SURE TO CLEAN THE AREA WHERE THE ADHESIVE IS APPLIED. USE PRI-13 TPO PRIMER ON TPO MEMBRANES. CHECK WITH ROOF MEMBRANE MANUFACTURER TO ENSURE THAT CLEANING AGENTS, RTB-01, TPO PRIMER, AND M-1 STRUCTURAL ADHESIVE ARE COMPATIBLE WITH ROOFING SYSTEM. THE SCB-07 BRACKET IS DESIGNED TO SECURE THE RTB-01 AND MOUNTED LOADS TO ROOF SURFACE, ANCHORING THE BLOX FROM MOVEMENT DUE TO MODERATE WIND, RAIN, AND SNOW LOADS. THE SCB-07 IS NOT ENGINEERED TO COMPLY WITH SEISMIC REQUIREMENTS AND IS NOT CONSIDERED A SEISMIC CONSTRAINT.

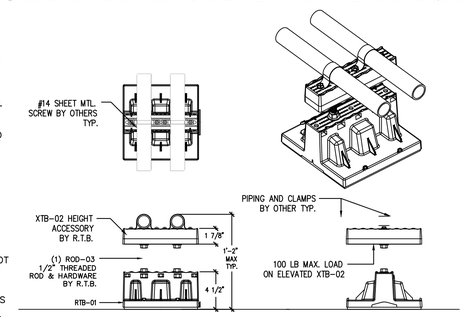

ROOF PIPING SUPPORT DETAIL 9
SCALE: NONE

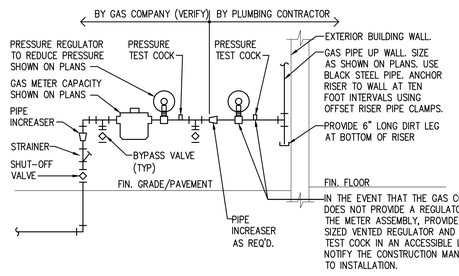

IN THE EVENT THAT THE GAS COMPANY DOES NOT PROVIDE A REGULATOR WITH THE METER ASSEMBLY, PROVIDE A LINE SIZED VENTED REGULATOR AND PRESSURE TEST COCK IN AN ACCESSIBLE LOCATION. NOTIFY THE CONSTRUCTION MANAGER PRIOR TO INSTALLATION.

NOTE:
VERIFY REQUIREMENTS FOR METERING AND PIPING WITH GAS COMPANY. INSTALL OTHER UTILITIES A MINIMUM OF 10'-0" FROM GAS LINE. PLUMBING CONTRACTOR SHALL PAY ALL GAS COMPANY FEES FOR INSTALLATION. USE WELDED OR SCREWED PIPE AND FITTINGS PER PLUMBING SPECS. GAS COMPANY SHALL EXCAVATE, BACKFILL AND REPAIR ANY PAVING OR SOD FOR GAS SERVICE LINE INSTALLATION FROM MAIN TO BUILDING.

GAS SERVICE DETAIL 10
SCALE: NONE

NOTE:
ITEMS #1 THRU #6 ARE FACTORY PRE-ASSEMBLED, FURNISHED BY THE SUPPLIER AND FIELD INSTALLED

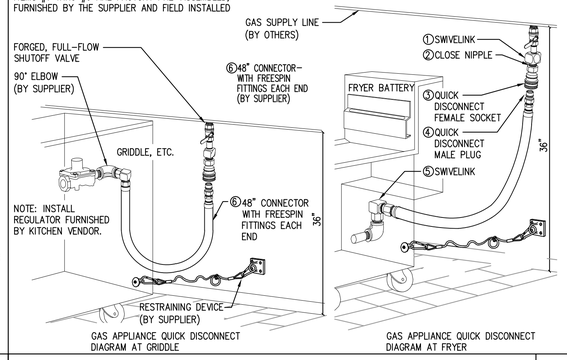

KITCHEN EQUIPMENT QUICK DISCONNECT DIAGRAM
SCALE: NONE

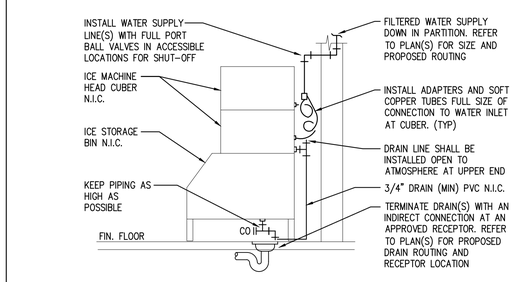

NOTE:
PROVIDE COLD WATER ROUGH-IN AT TOP OF ICE MACHINE. ARRANGEMENT SHOWN IS SCHEMATIC. ADJUST AS REQUIRED TO SUIT CONDITIONS. VERIFY CONNECTIONS WITH MANUFACTURER.

ICE MACHINE CONNECTION DETAIL 12
SCALE: NONE

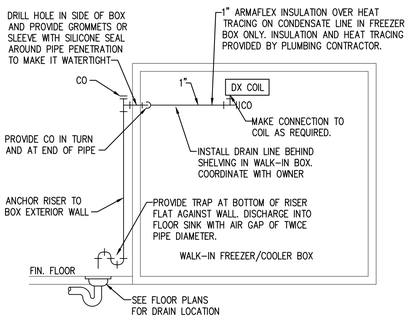

NOTE:
INSTALL PIPE AS HIGH AS POSSIBLE, ANCHORED TO WALL OF BOX WITH SUPPORTS AT MAXIMUM 6'-0" ON CENTERS. SLOPE HORIZONTAL PIPE AT MINIMUM TWO PERCENT IN THE DIRECTION OF FLOW. FINISH PIPE EXTERIOR TO WALK-IN BOX WITH CHROMATONE PAINT.

FREEZER/ COOLER CONDENSATE DRAIN DETAIL 13
SCALE: NONE

ENGINEER:
BRIAN E. CHANDLER, PE
6201 CAMPUS CIRCLE DRIVE E.
IRVING, TEXAS 75038
TEL: 972.870.1288
WWW.IDSTUDIO4.COM
E-MAIL: bchandler@idstudio4.com

CORPORATE:
BRINKER RESTAURANT CORPORATION, A VIRGINIA CORPORATION
3000 OLYMPUS BLVD.
DALLAS, TEXAS 75019
972.980.9917
www.brinker.com

09/23/2024
ISSUE FOR BID
THESE DOCUMENTS ARE FOR BIDDING PURPOSES ONLY. DO NOT USE FOR CONSTRUCTION.

RESTAURANT TYPOLOGY
PROTOTYPE 18.5FS

CHILI'S TOOELE
951 N MAIN STREET
TOOELE, UT 84074

CLIENT: BRINKER RESTAURANT CORP. A VIRGINIA CORPORATION

DATE	DESCRIPTION
6/07/2024	ISSUE FOR PERMIT
9/23/2024	ISSUE FOR BID

	DATE	DESCRIPTION
1	08.07.2024	CITY COMMENTS

PROJECT NUMBER:
CHI24007

SHEET TITLE:
PLUMBING DETAILS

SHEET NUMBER:
P301

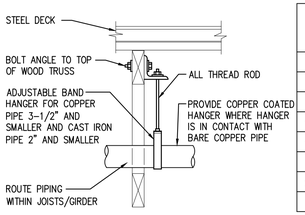

PIPE SIZE	PEX-a PIPE HANGER SPACING	COPPER PIPE HANGER SPACING	STEEL PIPE HANGER SPACING	PVC PIPE HANGER SPACING
1/2"	32"	5'	7'	4'
3/4"	32"	5'	7'	4'
1"	32"	6'	7'	4'
1-1/4"	32"	7'	8'	5'
1-1/2"	32"	8'	9'	5'
2"	32"	8'	10'	5'
2-1/2"	32"	10'	11'	6'
3"	32"	11'	12'	6'

NOTE:
PROVIDE UPPER ATTACHMENT AS REQUIRED FOR CASES NOT SHOWN HERE. DO NOT INSTALL HANGER INSIDE INSULATION OR OTHERWISE PENETRATE VAPOR BARRIER. DO NOT HANG ONE PIPE FROM ANOTHER EXCEPT IN CHASES. SLOPE ALL WATER PIPING SLIGHTLY TOWARD DRAINABLE LOCATIONS. HANGER SPACING FOR PIPE SIZE: AS INDICATED ON TABLE. CAST IRON: 10' AND WITHIN 1'-0" OF ALL JOINTS, ROD SIZES FOR PIPE SIZE: 2" AND SMALLER=3/8", 2 1/2" TO 3"=1/2", 4"=5/8", 6"=3/4", 8" AND LARGER=7/8". LOCATE HANGERS WITHIN 1'-0" OF VALVES AND FITTINGS. PROVIDE SUPPLEMENTARY STEEL STRUTS BETWEEN JOISTS IF REQUIRED. LOCATE HANGERS WITHIN 1'-0" OF EQUIPMENT CONNECTIONS. ANCHOR WATER PIPE AGAINST SWAYING DUE TO CHANGES IN WATER VELOCITY. CHAINS AND PERFORATED STRAP IRON AND STEEL ARE NOT ACCEPTABLE. DO NOT SUSPEND PIPE FROM JOIST BRACING MEMBERS. REFER TO CODE AND SPECIFICATIONS FOR FURTHER INFORMATION. PROVIDE SEISMIC BRACING IF/AS REQUIRED BY LOCAL AUTHORITIES. TRAPEZE HANGERS MAY BE USED FOR MULTIPLE PARALLEL PIPES, SEE "TRAPEZE PIPE HANGER DETAIL."

WOOD TRUSS PIPE HANGER DETAIL 1
SCALE: NONE

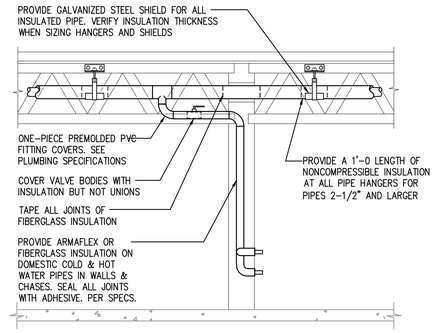

WOOD TRUSS PIPE INSULATION DETAIL 2
SCALE: NONE

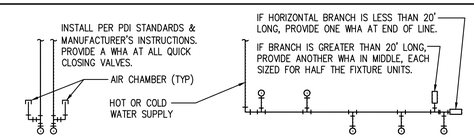

	PDI SIZE	PIPE SIZE	FIXTURE UNIT LOAD
SINGLE/DOUBLE FIXTURE	A	1/2"	1-11
	B	3/4"	12-32
	C	1"	33-60
	D	1-1/4"	61-113
	E	1-1/2"	114-154
	F	2"	154-330

	FIXTURE UNIT TABULATION		
	FIXTURE	COLD	HOT
MULTIPLE FIXTURES	VALVE WATER CLOSET	10	--
	TANK WATER CLOSET	5	--
	URINAL	5	--
	LAVATORY/SINK	1.5	1.5
	JANITOR'S SINK	3	3
	SHOWER/BATHTUB	2	2

NOTE:
FOR BATTERIES OF FIXTURES, PROVIDE WATER HAMMER ARRESTERS BY SIOUX CHIEF, PRECISION PLUMBING PRODUCTS, WATTS OR APPROVED EQUIVALENT WITH PISTON & O-RING CONSTRUCTION, HAVING PDI #WH-201, ASSE #1010 & ANSI #A112.26.1M CERTIFICATION. INSTALL IN HORIZONTAL OR VERTICAL POSITION, BUT NEVER UPSIDE DOWN. INSTALL IN LINE WITH WATER FLOW DIRECTION IF POSSIBLE. SIZE THE UNITS AS SHOWN ON THE DRAWINGS AND/OR PER THE TABLES SHOWN ABOVE. PROVIDE ACCESSIBILITY WHERE REQUIRED BY LOCAL CODE.

WATER HAMMER ARRESTOR DETAIL 3
SCALE: NONE

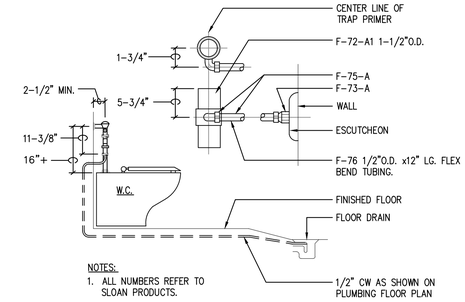

NOTES:
1. ALL NUMBERS REFER TO SLOAN PRODUCTS.

TRAP PRIMER DETAIL 4
SCALE: NONE

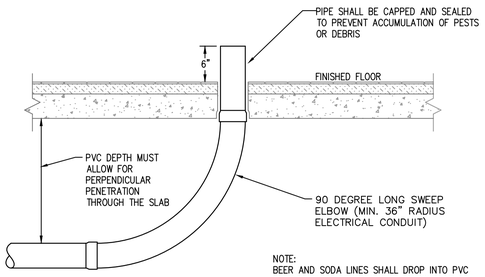

NOTE:
BEER AND SODA LINES SHALL DROP INTO PVC SLEEVES THEN CONTINUE THE BELOW SLAB TO DISPENSING LOCATION(S) NOTED ON THE PLANS. LINES SHALL RUN TIGHT UNDER COUNTER TOP TO SODA AND BEER HEAD LOCATIONS AS INDICATED ON EQUIPMENT DRAWINGS. PVC LINES SHALL BE AS STRAIGHT AS POSSIBLE WITH NO OFFSETS OR FITTINGS OTHER THAN THE (2) END SWEEPS (UNO).

SODA & BEER CHASE DETAIL 5
SCALE: NONE

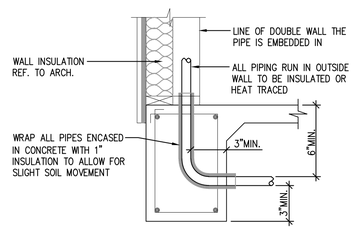

NOTES:
1. DO NOT CUT CONTINUOUS REINFORCEMENT UNLESS A LAP SPLICE OF 30 BAR DIAMETER EACH WAY IS USED. (LAP BAR SAME DIAMETER AS MAIN REINFORCEMENT)
2. PROVIDE A MINIMUM OF 3" OF COVER TO EDGE OF CONCRETE FROM EDGE OF PIPE. (VERTICAL AND HORIZONTAL).
3. IF FOOTING MUST BE WIDENED TO MEET THESE PARAMETERS, LENGTH IS 2'-0" MINIMUM PER PROJECTION.
4. REFER TO STRUCTURAL DETAILS FOR ADDITIONAL INFORMATION.

STANDARD GRADE BEAM PENETRATION DETAIL 6
SCALE: NONE

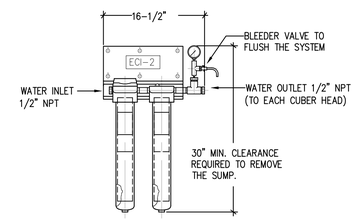

WATER FILTER DETAIL 7
SCALE: NONE

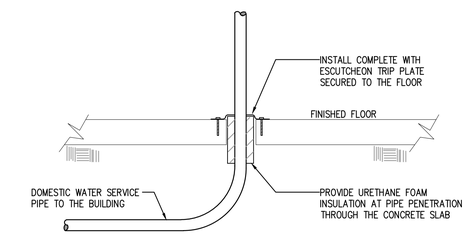

WATER SUPPLY RISER DETAIL 8
SCALE: NONE

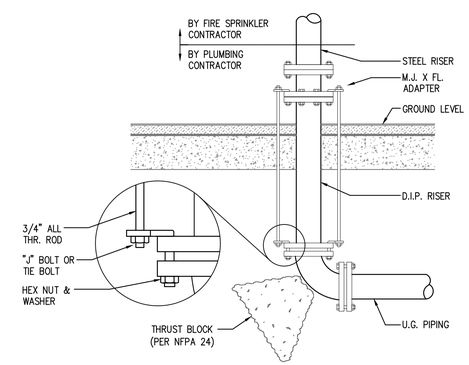

UNDERGROUND FIRE SERVICE STUB UP DETAIL 9
SCALE: NONE

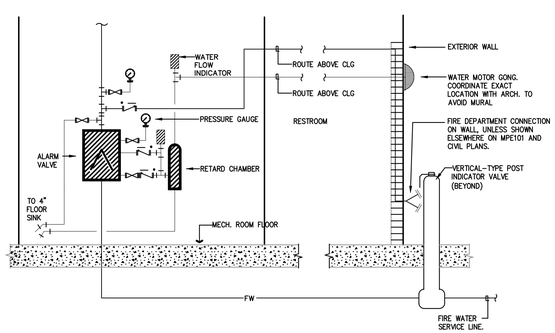

AUTOMATIC SPRINKLER RISER DETAIL 10
SCALE: NONE

WATER HEATER NOTES:
1. PROVIDE PRESSURE GAUGE (EQUAL TO OMEGA #PGS-25L-100) ON HOT WATER LINE IF REQUIRED BY STATE OR LOCAL CODE.
2. WATER HEATERS, EXPANSION TANK, RECIRC PUMP WILL BE INCLUDED IN WATER HEATER RACK ASSEMBLY PACKAGE.
3. EACH WATER HEATER HAS INTERNAL DRAIN VALVE, HIGH LIMIT CONTROL, LOW-WATER FUEL CUT-OFF, AND FLAME FAILURE CONTROL.
4. ALARM BOX INCLUDED WITH THE WATER HEATER RACK ASSEMBLY PACKAGE. INSTALL REMOTE ALARM IN MANAGER'S OFFICE.
5. INSTALL EXPANSION TANK WITHIN RACK ASSEMBLY PER MANUFACTURER INSTRUCTIONS.
6. SUPPORT VENT PIPING EVERY 3 FT. VERTICALLY AND 4 FT. HORIZONTALLY. THE COMPLETE VENT SYSTEM INCLUDING PIPING AND ROOF TERMINATION SHALL BE FURNISHED AND INSTALLED BY THE PLUMBING CONTRACTOR WITH THE WATER HEATER PACKAGE. FIELD COORDINATE FLASHING AND COUNTER FLASHING WITH THE LANDLORD APPROVED ROOFING CONTRACTOR.
7. INSTALL WATER HEATERS, PIPING, VALVES, AND APPURTENANCES FOR EASE OF MAINTENANCE AND REPLACING WATER HEATER(S) IN FUTURE.
8. REFER TO P303 FOR WATER HEATER FLUE DETAIL.
9. ADD CONDENSATE NEUTRALIZER, INCLUDED IN WATER HEATER RACK ASSEMBLY PACKAGE. TO BE INSTALLED BY PLUMBING CONTRACTOR
10. ADD VENTLESS GAS REGULATOR, INCLUDED IN WATER HEATER RACK ASSEMBLY PACKAGE. TO BE INSTALLED BY PLUMBING CONTRACTOR.

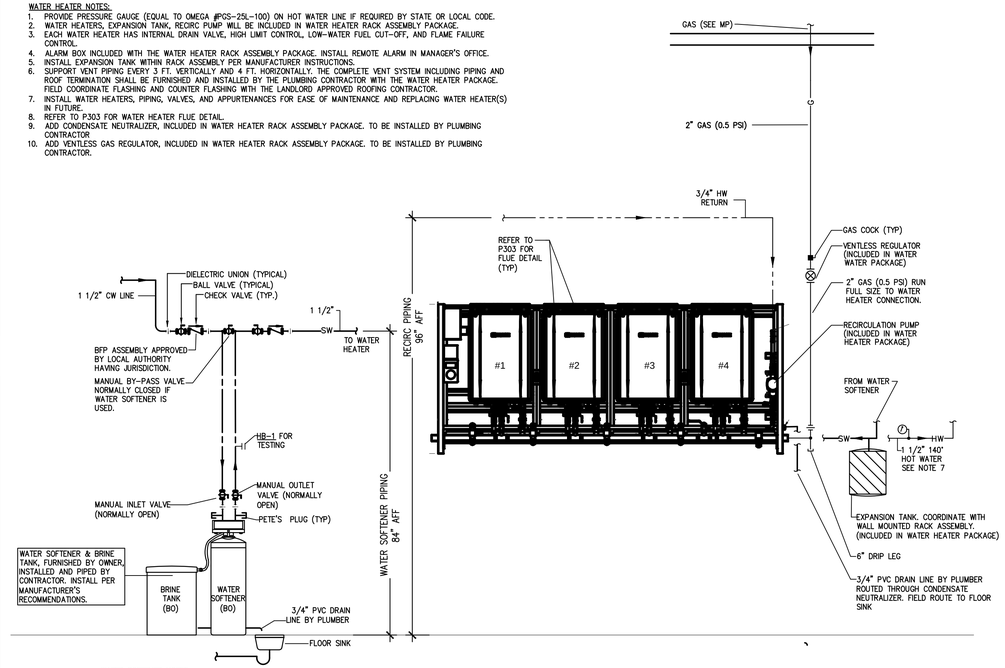

WATER SOFTENER NOTES:
1. INSTALL SOFTENER WITH DIELECTRIC UNIONS.
2. CHECK VALVE IS REQUIRED ON SERVICE SIDE OF SOFTENER.
3. CHECK LOCAL PLUMBING CODES TO DETERMINE PLUMBING REQUIREMENTS FOR FEED WATER TO SOFTENER.

TANKLESS GAS WATER HEATER AND WATER SOFTENER PIPING DIAGRAM 11
SCALE: NONE

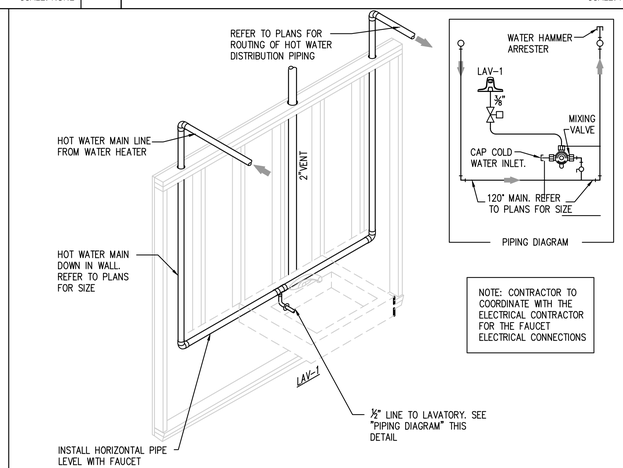

WATER LOOP TO RESTROOM LAVATORY BANK 12
SCALE: NONE

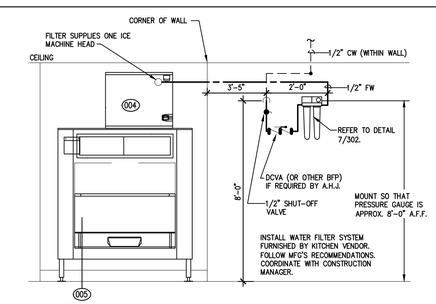

ICE MACHINE PIPING SCHEMATIC 13
SCALE: NONE

ENGINEER:
BRIAN E. CHANDLER, PE
6201 CAMPUS CIRCLE DRIVE E.
IRVING, TEXAS 75038
TEL: 972.870.1288
WWW.IDSTUDIO4.COM
E-MAIL: bchandler@idstudio4.com

CORPORATE:
BRINKER RESTAURANT CORPORATION, A VIRGINIA CORPORATION
3000 OLYMPUS BLVD.
DALLAS, TEXAS 75019
972.980.9917
www.brinker.com

09/23/2024
ISSUE FOR BID
THESE DOCUMENTS ARE FOR BIDDING PURPOSES ONLY. DO NOT USE FOR CONSTRUCTION.

RESTAURANT #CH1679
PROTOTYPE 18.5FS

CHILI'S TOOELE
951 N MAIN STREET
TOOELE, UT 84074

CLIENT: BRINKER RESTAURANT CORP.
A VIRGINIA CORPORATION

DATE	DESCRIPTION
6/27/2024	ISSUE FOR PERMIT
9/23/2024	ISSUE FOR BID

	DATE	DESCRIPTION
2	08.11.2023	OWNER UPDATES

PROJECT NUMBER:
CHI24007

SHEET TITLE:
PLUMBING DETAILS

SHEET NUMBER:
P302

NOT USED
SCALE: NONE
1

NOT USED
SCALE: NONE
2

NOT USED
SCALE: NONE
3

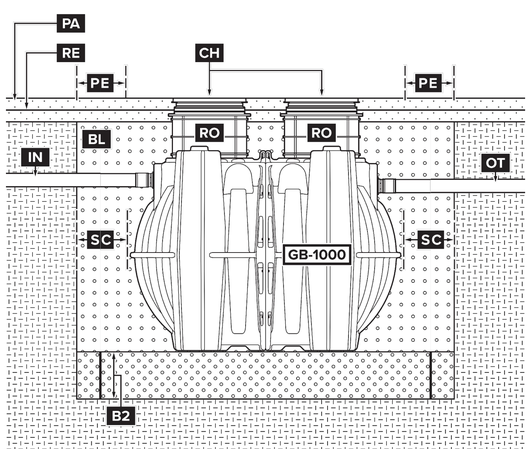

B2 12" minimum compacted base (clean aggregate 3/4" in size or smaller)

BL Backfill (clean aggregate 3/4" in size or smaller) - DO NOT COMPACT BACKFILL MECHANICALLY

CH H-20 load rated cast iron cover

IN 4" diameter inlet pipe

OT 4" diameter outlet pipe

PA Minimum 8" thick concrete pad with rebar required for vehicular traffic. Concrete to be 28 day compressive strength to 4,000 PSI.

PE Pad to extend 18" minimum beyond edge of tank on all sides.

RE No. 4 rebar, grade 60 steel

RO FCR2 field cut riser to grade

SC 12" clear all sides

DETAIL Chili's - Tooele, UT Outdoors, Below Grade

GB-1000GREASE INTERCEPTOR 100 GPM / 200 GPM, 4" PLAIN/FPT CONNECTIONS, H-20 RATED PICKABLE COVER, ROOF OVERLAY

SCHIER

LIFETIME GUARANTEED
GREASE INTERCEPTORS

schierproducts.com

Disclaimer: this Detail represents manufacturer directed guidance regarding the grease interceptor system. The contents of this document are not a substitute for local jurisdiction requirements and plumbing code standards. Please follow all local ordinances when installing.

GREASE INTERCEPTOR & SAMPLE WELL BASIN DETAIL (WHERE REQUIRED BY THE JURISDICTION)
SCALE: NONE
4

NOTES:

1. CONTRACTOR TO INSTALL COMMON VENT KIT PER MANUFACTURE'S INSTRUCTIONS.
2. INSTALLATION COMPLETE WITH NORTIZ #PRC-1 RAIN CAP.

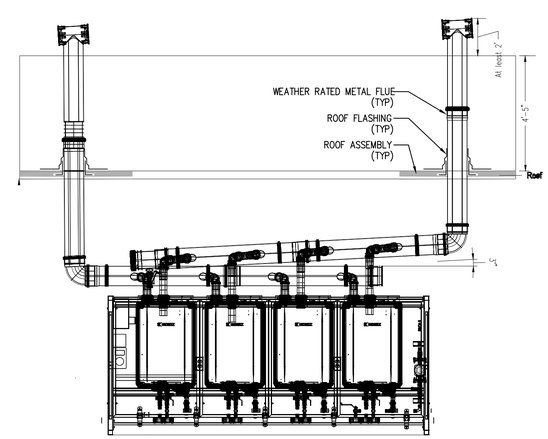

Facilities Resource Group
285 Dodge Court, Suite A
Comstock Park, MI 49321
Phone: 877-554-0004

WATER HEATER COMMON VENT DETAIL
SCALE: NONE
5

ENGINEER:

BRIAN E. CHANDLER, PE

6201 CAMPUS CIRCLE DRIVE E.
IRVING, TEXAS 75038
TEL: 972.870.1288
WWW.IDSTUDIO4.COM
E-MAIL: bchandler@idstudio4.com

CORPORATE:
BRINKER RESTAURANT CORPORATION, A VIRGINIA CORPORATION
3000 OLYMPUS BLVD.
DALLAS, TEXAS 75019
972.980.9917
www.brinker.com

09/23/2024
ISSUE FOR BID
THESE DOCUMENTS ARE FOR BIDDING PURPOSES ONLY. DO NOT USE FOR CONSTRUCTION.

RESTAURANT #CH1679
PROTOTYPE 18.5FS

CHILI'S TOOELE
951 N MAIN STREET
TOOELE, UT 84074

CLIENT: BRINKER RESTAURANT CORP. A VIRGINIA CORPORATION

DATE	DESCRIPTION
6/27/2024	ISSUE FOR PERMIT
9/23/2024	ISSUE FOR BID

⚠	DATE	DESCRIPTION

PROJECT NUMBER:
CHI24007

SHEET TITLE:
PLUMBING DETAILS

SHEET NUMBER:
P303

PLUMBING GENERAL NOTES

MISCELLANEOUS:

1. CONTRACTOR SHALL REFER TO SHEET MPE101 FOR GENERAL MEP NOTES APPLICABLE TO ALL PLANS. GENERAL NOTES SHALL APPLY TO ALL SHEETS, I.E. ALL WORK UNLESS NOTED OTHERWISE (U.N.O.).
2. 3 PLUMBING WORK SHALL COMPLY WITH THE 2021 INTERNATIONAL PLUMBING CODE (WITH CITY AMENDMENTS), 2021 INTERNATIONAL FUEL GAS CODE (WITH CITY AMENDMENTS), NFPA 54, AND THE AUTHORITIES HAVING JURISDICTION (A.H.J.).
3. PLUMBING WORK SHALL INCLUDE FURNISHING, INSTALLING, AND TESTING ALL PLUMBING SYSTEMS, INCLUDING: PIPING, VALVES, DEVICES AND APPURTENANCES, AND EQUIPMENT FOR COMPLETE AND FULLY OPERATIONAL SYSTEMS. CONTRACTOR SHALL COORDINATE, INSTALL, AND TEST ITEMS SPECIFICALLY NOTED AS FURNISHED BY OTHERS. WORK INCLUDES, BUT IS NOT LIMITED TO:
   - FIELD VERIFYING AND INSPECTING EXISTING SYSTEMS AND UTILITY CONNECTION POINTS.
   - CONCRETE CUTTING, REMOVAL, BACK FILL, AND PATCHING.
   - PIPING, FITTINGS, AND ESCUTCHEONS AT WALL PENETRATIONS.
   - PVC WITH UV INHIBITOR CONDENSATE DRAINS FROM ROOF MOUNTED COOLING COILS (REFER TO MECHANICAL PLANS AND COORDINATE).
   - PLUMBING FIXTURES.
   - COPPER CONDENSATE AND INDIRECT DRAINS FROM KITCHEN EQUIPMENT IN ACCORDANCE WITH EQUIPMENT MANUFACTURER'S DIRECTIONS.
   - FAUCETS, DRAINS, AND CHROME-PLATED VALVES FOR MOP SINKS AND RESTROOM SINKS.
   - WATER HEATER AND TEMPERATURE / PRESSURE SAFETY RELEASE.
   - BACKFLOW PREVENTER AT WATER FILTER, COFFEE/TEA MAKER, AND SODA DISPENSER AND VACUUM BREAKER AT EACH PIECE OF EQUIPMENT CONNECTED TO COLD WATER AND AS REQUIRED BY LOCAL CODE.
   - SHUT-OFF VALVES ON WATER AND GAS PIPES AT EACH BRANCH AND PIECE OF EQUIPMENT OR FIXTURE.
   - GAS PIPING (REFER TO MECHANICAL PLANS AND KITCHEN PLANS AND COORDINATE).
   - CUTTING AND PATCHING NEW ROOF OPENINGS.
   - WEATHER-PROOF ROOF AND WALL PENETRATIONS.
4. CONTRACTOR SHALL VISIT SITE PRIOR TO SUBMITTAL OF BID AND FAMILIARIZE HIMSELF WITH EXISTING CONDITIONS. SUBMITTAL OF BID WILL VERIFY THAT THE CONTRACTOR HAS VISITED THE SITE.
5. CONTRACTOR SHALL CAREFULLY INSPECT ALL EQUIPMENT RECEIVED AND VERIFY THAT IT IS COMPATIBLE WITH THE MECHANICAL, ELECTRICAL, AND PLUMBING SYSTEMS PRIOR TO INSTALLING EQUIPMENT. CONTACT ARCHITECT OR ENGINEER FOR DIRECTION IF ANY SIGNIFICANT DISCREPANCY ARISES.
6. REFER TO ARCHITECTURAL PLANS AND KITCHEN PLANS FOR FINAL LOCATIONS AND ELEVATIONS OF ROUGH-IN TO EQUIPMENT. MAKE ALL CONNECTIONS. CONTRACTOR SHALL FIELD VERIFY AND CONTACT THE ARCHITECT/ ENGINEER FOR DIRECTION IF ANY SIGNIFICANT DISCREPANCY IS FOUND.
7. REFER TO PLUMBING FIXTURE AND EQUIPMENT SCHEDULES FOR INDIVIDUAL WASTE, VENT & WATER CONNECTION SIZES AT EACH PLUMBING FIXTURE OR EQUIPMENT.
8. THE PLUMBING CONTRACTOR SHALL GUARANTEE ALL MATERIALS AND LABOR (INCLUDING THE COMPLETE PLUMBING SYSTEM) FOR A PERIOD OF ONE YEAR FROM WRITTEN ACCEPTANCE BY THE TENANT. ANY DEFECTS IN MATERIALS AND OR LABOR FOUND WITHIN THE GUARANTEE PERIOD SHALL BE REMEDIED OR REPAIRED BY THIS CONTRACTOR IN A TIMELY FASHION, AT NO COST TO THE TENANT.
9. THE PLUMBING CONTRACTOR SHALL BE ON SITE AND PRESENT AT THE DATE OF STORE TURNOVER.
10. FOR ADDITIONAL INFORMATION, REFER TO THE SPECIFICATIONS FOR MORE DETAILED
11. REFER TO THE SPECIFICATIONS FOR MORE ADDITIONAL INFORMATION NOT ALREADY SHOWN IN THE PLANS. WHERE A DISCREPANCY MAY EXIST BETWEEN WHAT IS SHOWN ON THE PLANS AND WHAT IS DESCRIBED BY NOTE OR SPECIFICATION, THE CONTRACTOR SHALL PROVIDE THE GREATER QUANTITY, THE BETTER QUALITY, THE MORE STRINGENT, AND GREATER COST ITEM(S) OR REQUEST CLARIFICATION FROM THE ARCHITECT PRIOR TO SUBMITTING FINAL BID.
12. THESE PLANS AND SPECIFICATIONS ARE SCHEMATIC AND DIAGRAMMATIC IN NATURE AND DO NOT SHOW ALL DETAILS, DEVICES, AND METHODS OF CONSTRUCTION REQUIRED TO ACHIEVE A FIRSTCLASS WORKMANLIKE, CODE COMPLIANT RESULT.
13. THE TERM "PROVIDE" SHALL BE UNDERSTOOD TO MEAN FURNISH, INSPECT, INSTALL, CHARGE (AS WITH REFRIGERANT IN DX UNITS, LAMPS IN LUMINAIRES, BATTERIES, ETC.) CONNECT, ADJUST, BALANCE, TEST, AND WARRANT TO INSURE THAT EQUIPMENT OR DEVICE IS FULLY FUNCTIONAL. "INSTALL" SHALL INCLUDE ALL LABOR, INCIDENTAL MATERIAL, ERECTING EQUIPMENT, TRANSPORTATION, TOOLS, TEST EQUIPMENT, ETC.
14. PRIOR TO SUBMITTING A FINAL BID, THE CONTRACTOR SHALL:
   - STUDY THE FULL SET OF CONSTRUCTION DOCUMENTS INCLUDING SPECIFICATIONS.
   - VISIT THE SITE AND PERFORM A THOROUGH EXAMINATION OF ALL EXISTING CONDITIONS.
   - NOTIFY THE ARCHITECT IN WRITING OF ANY SIGNIFICANT DISCREPANCY BETWEEN THE EXISTING CONDITIONS AND THE CONSTRUCTION DOCUMENTS.
   - CONTACT THE ARCHITECT OR THE ENGINEER IF FURTHER DIRECTION OR ADDITIONAL EXPLANATION IS REQUIRED ON ANY ITEM.
   - INCLUDE AN ALLOWANCE IN THE BID TO COVER ANY ADDITIONAL COSTS DUE TO NOTED DISCREPANCIES, EXISTING CONDITIONS, OBSERVATIONS ETC.
15. THE CONTRACTOR SHALL BE FULLY LICENSED WITH THE STATE AND MUNICIPALITY WHERE REQUIRED AND SHALL BE EXPERIENCED IN ALL AREAS OF THEIR RESPECTIVE WORK. THE CONTRACTOR SHALL BE FAMILIAR WITH LOCAL CODES AND REQUIREMENTS AFFECTING THEIR WORK.
16. CONTRACTOR SHALL INCLUDE AND GUARANTEE FULL MAINTENANCE AND EMERGENCY SERVICE CALLS AGAINST DEFECTIVE MATERIALS AND WORKMANSHIP FOR A PERIOD OF ONE YEAR FROM FINAL ACCEPTANCE OF FACILITY ON ALL FURNISHED EQUIPMENT AND DEVICES, CONTRACTOR'S INSTALLATION.
17. CONTRACTOR SHALL COLLECT AND FURNISH TO OWNER ALL OPERATIONS AND MAINTENANCE MANUALS FOR INSTALLED EQUIPMENT AS WELL AS WARRANTIES AND GUARANTEES FOR SAME, TURN OVER PRIOR TO REQUESTING FINAL PAYMENT.
18. CONTRACTOR SHALL MAINTAIN CLEAN SETS OF PLANS ON JOBSITE, NOTING DAILY CHANGES MADE IN PLANS (RED-LINES). RED-LINED DRAWINGS MUST BE KEPT CURRENT AND REFLECT ALL ACTUAL ASPECTS OF THE INSTALLATION THAT DEVIATE FROM RECORD DESIGN DRAWINGS. PROVIDE NEATLY DRAWN AND LETTERED AS-BUILT DRAWINGS WITH MATERIAL, SIZES, DIMENSIONED LOCATIONS, INVERT ELEVATIONS OF UNDERGROUND PIPES, UTILITIES FOUND IN FIELD, ETC. PRIOR TO REQUESTING FINAL PAYMENT.
19. UPON THE COMPLETION OF WORK AND PRIOR TO APPLYING FOR FINAL PAYMENT , THOROUGHLY CLEAN ALL EXPOSED PORTIONS OF INSTALLED EQUIPMENT, AND TOUCH UP PAINT WHERE NECESSARY. FOLLOW MANUFACTURERS' RECOMMENDATIONS FOR CLEANING.
20. THE FINAL ACCEPTANCE WILL BE MADE AFTER THE CONTRACTOR HAS ADJUSTED THE EQUIPMENT, BALANCED THE SYSTEMS, DEMONSTRATED THAT THE PROJECT FULFILLS THE REQUIREMENTS OF THE DRAWINGS AND SPECIFICATIONS AND HAS FURNISHED ALL THE REQUIRED CERTIFICATES OF INSPECTION AND APPROVAL TO THE ARCHITECT/OWNER.

INSTALLATION:

21. MATERIALS SHALL BE NEW AND BEAR UNDERWRITERS LABORATORIES (U.L) LABEL WHERE SUCH STANDARDS HAVE BEEN ESTABLISHED.
22. ALL INFORMATION INDICATED ON THESE DRAWINGS HAS BEEN OBTAINED FROM EXISTING PLANS, REPORTS, AND PHOTOS FROM OTHERS, AND/OR FROM SITE SURVEYS. THE CONTRACTOR SHALL FIELD VERIFY AND COORDINATE ALL WORK SHOWN ON THESE DRAWINGS WITH EXISTING CONDITIONS, PRIOR TO BEGINNING WORK OR ORDERING EQUIPMENT AND MATERIAL.
23. UTILITY INFORMATION SHOWN ON THE PLANS IS FROM PRELIMINARY CONTACT WITH THE RESPECTIVE UTILITIES AND/OR FROM INFORMATION PROVIDED BY OTHERS. THE CONTRACTOR SHALL CONTACT THE UTILITY COMPANIES PRIOR TO BIDDING TO OBTAIN THE MOST UP TO DATE INFORMATION AND INSTALLATION REQUIREMENTS. INCLUDE ALL COSTS IN THE BASE BID, INCLUDING UTILITY CONNECTION, METER, AND OTHER FEES. REPORT ANY DISCREPANCY TO THE ARCHITECT OR ENGINEER.
24. CONTRACTOR SHALL REQUEST THAT UTILITY COMPANIES LOCATE AND MARK ALL UNDERGROUND WATER PIPES, SANITARY SEWERS, GAS PIPES, ELECTRICAL AND COMMUNICATIONS CONDUITS AND DUCTBANKS, ETC. PRIOR TO DIGGING OR TRENCHING ON SITE. CONTRACTOR SHALL BE FULLY RESPONSIBLE AND BEAR COST FOR REPAIRING ANY UTILITY DAMAGE ON SITE.
25. INSTALL WORK SO AS TO BE READILY ACCESSIBLE FOR OPERATION, MAINTENANCE AND REPAIR, MINOR DEVIATIONS FROM DRAWINGS MAY BE MADE TO ACCOMPLISH THIS, BUT CHANGES WHICH INVOLVE EXTRA COST SHALL NOT BE MADE WITHOUT APPROVAL.
26. CONTRACTOR SHALL USE EXTREME CARE IN SELECTION AND MOUNTING METHODS FOR INSTALLATION OF EQUIPMENT TO INSURE THAT NOISE AND VIBRATION ARE HELD TO A MINIMUM. USE VIBRATION ISOLATORS, SPRINGS, DAMPENING MATERIALS, ETC WHERE REQUIRED. ON MOTOR DRIVEN SYSTEMS EXCEEDING 1/2HP, PROVIDE VIBRATION ISOLATION AS RECOMMENDED BY THE EQUIPMENT MANUFACTURER OR EQUAL TO KINETICS NOISE CONTROL WHERE NO RECOMMENDATION IS MADE.
27. REFER TO ARCHITECTS SPECIFICATIONS AND NOTES FOR CUTTING TRENCHING, AND PATCHING. PAINT ALL CONDUIT, PIPING, DUCTS, AND DEVICES EXPOSED TO PUBLIC PER ARCHITECTURAL PLANS OR TO MATCH ADJACENT BUILDING SURFACE, UNLESS NOTED OTHERWISE.
28. NO LIQUID TRANSMISSION PLUMBING PIPING SHALL BE INSTALLED ABOVE ELECTRICAL SWITCH GEAR, EQUIPMENT, OR PANELS. MAKE ADJUSTMENTS NECESSARY TO REROUTE PIPING FOR ACTUAL INSTALLATION OF ELECTRIC EQUIPMENT.
29. PROVIDE COPPER LABELS INDICATING TYPE AND DIRECTION OF FLOW ON ALL PIPING WITHIN THE MECHANICAL ROOM. 3
30. DISHMACHINE SHALL CONFORM TO ASSE 1004 AND NSF 3 AND SHALL BE PROTECTED AGAINST BACKFLOW IN COMPLIANCE WITH THE 2021 INTERNATIONAL PLUMBING CODE, SECTION 409 AND LOCAL CODE REQUIREMENTS.
31. NO PIPING SHALL BE DIRECTLY EMBEDDED IN CONCRETE, MASONRY WALLS, OR CONCRETE FOOTINGS. CONTRACTOR SHALL PROVIDE PIPE SLEEVES FOR ALL PIPES PASSING THROUGH FOUNDATION WALLS. USE SLEEVE ONE SIZE LARGER THAN PIPE AND SEAL AROUND SLEEVE AND PIPE. REFER TO STRUCTURAL PLANS FOR DETAILS.
32. ALL ABOVE SLAB HORIZONTAL PIPING LINES EXTENDED AND CONNECTED TO EQUIPMENT SHALL BE RUN AT THE HIGHEST POSSIBLE ELEVATIONS, AND NOT LESS THAN 6" ABOVE THE FLOOR TO PROVIDE CLEARANCE FOR CLEANING.
33. ALL CUTTING OF EXISTING PAVING, WALKS AND/OR FLOORS SHALL UTILIZE MACHINE SAW CUTTING EQUIPMENT. HOLES FOR PIPES IN CONCRETE WALLS OR FLOORS SHALL UTILIZE CORE DRILLING EQUIPMENT. COORDINATE WITH ARCHITECTURAL DETAILS FOR FLOOR CUTTING AND PATCHING.
34. PIPING SHALL BE INSTALLED PARALLEL TO BUILDING LINES AND SUPPORTED AND ANCHORED AS REQUIRED TO FACILITATE EXPANSION AND CONTRACTION. THE INSTALLATION SHALL MEET ALL CONSTRUCTION CONDITIONS AND ALLOW FOR THE INSTALLATION OF OTHER TRADES.
35. ALL ITEMS PROJECTING THROUGH THE ROOF SHALL BE FLASHED THROUGH CURBS OR PIPE SEALS A MINIMUM OF 12" ABOVE THE ROOF. THE PIPE CURBS AND SEALS SHALL BE INSTALLED BY THE ROOFING CONTRACTOR. ENSURE THAT AMPLE BOOT OPENINGS ARE PROVIDED TO ACCOMMODATE ANY ELECTRICAL CONDUIT PENETRATIONS REQUIRED FOR POWER.
36. ALL VALVES, TRAP PRIMERS, WATER HAMMER ARRESTORS OR OTHER EQUIPMENT SHOWN IN WALLS OR ABOVE NON-ACCESSIBLE CEILINGS SHALL BE INSTALLED BEHIND AN ACCESS PANEL. COORDINATE THE LOCATIONS OF ANY CEILING ACCESS PANELS WITH THE ARCHITECTURAL REFLECTED CEILING PLAN (RCP).
37. PROVIDE UNIONS OF SAME PRESSURE RATING AS SYSTEM AT PROPER POINTS TO ALLOW REMOVAL OF EQUIPMENT, PIPE, ETC. WITHOUT DAMAGE TO OTHER PARTS OR SYSTEMS.
38. UNIONS THE SAME SIZE AS CONNECTED PIPING SHALL BE PROVIDED AND INSTALLED AFTER EACH SCREW-TYPE VALVE AND PRIOR TO EQUIPMENT CONNECTIONS. PROVIDE DIELECTRIC UNIONS TO SEPARATE DISSIMILAR MATERIAL PIPES.
39. ALL WATER PIPING AND SEWERS SHALL BE PROPERLY TESTED TO THE SATISFACTION OF THE A.H.J. AND ARCHITECT/ ENGINEER.
40. TRENCHES SHALL BE BACK-FILLED WITH CLEAN SOIL BY TAMPING OR PUDDLING IN 6" INCREMENTS. NO PIPE SHALL BE LESS THAN 12" BELOW FINISHED GRADE.
41. WHENEVER FOUNDATION WALLS, EXTERIOR WALLS, ROOFS, ETC. ARE PENETRATED FOR THE INSTALLATION OF PLUMBING SYSTEMS, THEY SHALL BE PATCHED TO MATCH EXISTING CONSTRUCTION AND SEALED WEATHER TIGHT.
42. TRENCHING FOR PLUMBING INSTALLED PARALLEL TO FOOTINGS AND WALLS SHALL NOT EXTEND INTO THE 45°BEARING PLANE OF ALL FOOTINGS AS PER 2021 INTERNATIONAL PLUMBING CODE SECTION 307.5. 3

WATER SUPPLY PIPING:

43. ALL HOT, COLD, AND FILTERED WATER PIPING SHALL CONFORM TO NSF 61. IT SHALL BE SECURED AND PROPERLY SUPPORTED ABOVE CEILINGS AND WITHIN WALLS, UNEXPOSED TO VIEW, WHEREVER POSSIBLE. SURFACE MOUNTED PIPING IS NOT ACCEPTABLE, UNLESS APPROVED IN WRITING BY ARCHITECT.
44. PROVIDE VIBRATION ISOLATION. PROVIDE WATER HAMMER ARRESTERS CONFORMING TO ASSE 1010 AT THE TOP OF EACH PLUMBING RISER AND AT EACH QUICK CLOSING VALVE (E.G. FLUSH VALVE).
45. TRAP PRIMERS FOR FLOOR DRAINS AND WATER HAMMER ARRESTORS TO BE INSTALLED AS PER THE 2021 INTERNATIONAL PLUMBING CODE, WITH LOCAL AMENDMENTS AND THE LATEST EDITION OF ASSE 1010 SIZING AND INSTALLATION REQUIREMENTS. 3
46. PROVIDE SHUT-OFF VALVES AND MAKE FINAL CONNECTION PER MANUFACTURER'S RECOMMENDATIONS TO ALL KITCHEN EQUIPMENT. REFER TO KTCHEN PLANS AND ARCHITECTURAL PLANS FOR ADDITIONAL REQUIREMENTS.
47. PROVIDE CHECK VALVES (EQUAL TO WATTS #601 SERIES) ON CW AND HW TO MOP SINK, PRE-RINSE FAUCETS AT 3-COMP SINK AND AT DISHTABLE, WATER SOFTENER, KETTLE FAUCETS, ALL MIXING VALVES, AND WHERE SHOWN ON PLANS. MOUNT CHECK VALVES WHERE ACCESSIBLE, E.G. ABOVE CEILING.
48. NOTE THAT SOME WATER ROUGH-INS ARE COMMON TO SEVERAL PIECES OF KITCHEN EQUIPMENT. MAKE FINAL CONNECTION TO EACH.
49. PROVIDE PRESSURE REDUCING VALVES CONFORMING TO ASSE 1003 FOR ALL HOT AND COLD WATER PIPES SERVING EQUIPMENT IF PRESSURE EXCEEDS 75 P.S.I. PROVIDE PRESSURE REDUCING VALVE AT DISHWASHER AS RECOMMENDED BY MANUFACTURER.
50. CONTRACTOR SHALL TEST WATER PRESSURE DOWNSTREAM OF WATER METER AND BACKFLOW PREVENTER. IF LESS THAN 45 P.S.I., IMMEDIATELY NOTIFY THE ARCHITECT/ ENGINEER FOR DIRECTION.
51. CONTRACTOR SHALL PURGE DELETERIOUS MATERIAL AND DISINFECT ALL WATER SUPPLY PIPING AND SYSTEMS IN ACCORDANCE WITH AWWA C651 OR LOCAL CODE, WHICHEVER IS MORE STRINGENT. 3

GAS SUPPLY PIPING:

52. CONTRACTOR SHALL CONTACT GAS COMPANY TO COORDINATE INSTALLATION OF NEW GAS METER AND APPROPRIATE PRESSURE REGULATOR. PROVIDE APPROVED GAS PRESSURE REGULATORS. ALL WORK SHALL COMPLY WITH THE 2021 INTERNATIONAL FUEL GAS CODE AND NFPA 54.
53. CONNECTIONS, FITTINGS, ETC. SHALL BE SAME WEIGHT AS PIPE AND EQUAL TO PRODUCTS OF CRANE COMPANY VALVES SHALL CONFORM TO ASME B16.33. ONE INCH AND SMALLER VALVES SHALL BE LEVER HANDLE. LARGER VALVES SHALL BE IRON BODY WITH BRONZE SQUARE HEAD PLUG. PROVIDE OPERATING WRENCH WITH EACH VALVE. PROVIDE UNIONS AT EACH CONNECTION TO EQUIPMENT. DO NOT INSTALL UNIONS ELSEWHERE.
54. NEW GAS PIPING SHALL BE INSPECTED AND TESTED IN ACCORDANCE WITH NFPA 54 AND 2021 INTERNATIONAL FUEL GAS CODE, SECTION 406 AND APPENDIX IX D.
55. GAS BRANCH LINES SHALL BE MADE WITH 45° AND 90° TEES OUT OF THE TOP OF MAINS. PROVIDE DIRT LEGS AT RTU'S, WATER HEATERS, AND COOKLINE MANIFOLD.
56. CONTRACTOR SHALL INSTALL SOLENOID VALVE FOR KITCHEN GAS CONTROL, FURNISHED BY THE KITCHEN EQUIPMENT VENDOR, AND WIRED BY THE FIRE SUPPRESSION SYSTEM CONTRACTOR.
57. PROVIDE U.L. LISTED CORRUGATED, FLEXIBLE GAS CONNECTIONS TO COOKING EQUIPMENT CONFORMING TO ANSI Z21.24. PROVIDE RIGID CONNECTIONS TO ALL OTHER EQUIPMENT AND APPLIANCES AND WHERE LOCAL CODE PROHIBITS THE USE OF FLEXIBLE CONNECTIONS. OUTDOOR CONNECTORS SHALL BE LISTED FOR OUTDOOR USE.
58. PROVIDE ROCKWELL, NORDSTROM, CRANE, WALWORTH, OR EQUAL PLUG TYPE STOP COCKS IN THE GAS LINES, IN EACH BRANCH LINE AND RISER, SERVING TWO OR MORE OUTLETS. PROVIDE STOP COCK AT EACH OUTLET WITH A UNION BETWEEN IT AND THE EQUIPMENT SERVED. THE FIRING VALVE CONTROL SHALL NOT BE CONSTRUED AS SUITABLE FOR SHUT-OFF. PROVIDE MASTER SHUT-OFF VALVE AT THE METER, AT MAIN BRANCHES, AND AS SHOWN ON PLANS.

WASTE AND VENT PIPING:

59. ALL EXPOSED DRAIN PIPING FOR HANDSINKS SHALL BE CHROME PLATED. CONCEALED RESTROOM LAVATORY DRAIN PIPING MAY BE PVC.
60. CONDENSATE DRAINS FROM COOLER AND FREEZER SHALL BE RUN TO THE NEAREST FLOOR DRAIN OR FLOOR SINK WITH HARD COPPER DWV PIPE.
61. CONTRACTOR MAY PROVIDE OWNER A DEDUCT-ALTERNATE TO INSTALL CONDENSATE DRAINS ON ROOF AS PVC WITH UV INHIBITOR IF ALLOWED BY A.H.J. THEY MAY RUN TO ROOF DRAIN (NOT EMERGENCY OVERFLOW DRAIN).
62. ALL HORIZONTAL SANITARY AND GREASE WASTE PIPING SHALL BE RUN AT A MINIMUM SLOPE OF 2% (1/4" PER FT.), U.N.O.
63. CLEANOUTS SHALL BE PROVIDED IN SANITARY AND GREASE WASTE AT CHANGE OF DIRECTION EXCEEDING 45° AND IN INTERIOR INTERVALS NOT EXCEEDING 50 FT. CLEANOUTS SHALL BE SAME SIZE AS PIPE AND MADE OF BRASS CAULKED INTO LINES WITH ADJUSTABLE ACCESS PLATES IN FINISHED AREAS. EXTERIOR CLEANOUTS SHALL BE ENCASED IN CONCRETE AT GRADE.
64. PROVIDE CLEANOUTS IN INDIRECT DRAINS AT CHANGE OF DIRECTION EXCEEDING 45° INSTALL IN ACCORDANCE WITH THE 2021 INTERNATIONAL PLUMBING CODE, SECTION 802. FOR EXAMPLE, PROVIDE TRAP WHERE DRAIN EXCEEDS 2 FT. IN HORIZONTAL OR 4' IN OVERALL DEVELOPED LENGTH. 3
65. CONTRACTOR SHALL SNAKE ALL DRAIN LINES AND SANITARY SEWER LINES PRIOR TO APPLYING FOR FINAL PAYMENT. 3
66. ALL PLUMBING FIXTURE VENTS TO TERMINATE A MINIMUM OF 12 INCHES FROM ANY VERTICAL SURFACE AND 10'-0" HORIZONTAL FROM OR 3'-0" VERTICAL ABOVE ANY MECHANICAL EQUIPMENT OUTSIDE AIR INTAKE.
67. ALL DRAIN LINES LOCATED ABOVE THE FINISHED FLOOR AND UNDER EQUIPMENT/ MILLWORK SHALL BE INSTALLED WITH STANDOFFS TO SECURE PIPING. MAINTAIN A MINIMUM 6" CLEARANCE ABOVE FINISHED FLOOR FOR CLEANING.

PLUMBING LEGEND

SYMBOL	ABBREV.	DESCRIPTION
SAN	S OR W	SOIL OR WASTE (BELOW GRADE)
GW	GW	GREASE WASTE
	V	VENT
CD	CD	CONDENSATE DRAIN
ST	ST	STORM DRAIN
CW	CW	COLD WATER
FW	FW	FILTERED WATER
SW	SW	SOFTENED WATER
FSW	FSW	FIRE SERVICE WATER
HW	HW	HOT WATER
HWR	HWR	HOT WATER RETURN
RCL	RCL	RECLAIMED HEAT WATER
G	G	GAS, NATURAL OR PROPANE
	UP	PIPE UP
	DN.	TEE DOWN
	DN.	PIPE DOWN
	FCO	FLOOR CLEANOUT
	DCO	DOUBLE CLEANOUT
	CO	CLEANOUT, WALL OR PIPE
	SOV	SHUT-OFF VALVE
NO	SOV	SHUT-OFF VALVE, NORMALLY OPEN
NC	SOV	SHUT-OFF VALVE, NORMALLY CLOSED
	C.V.	CHECK VALVE
	BL.V.	BALL VALVE
	B.V.	BALANCING VALVE
	U	UNION
	P.V.	MECHANICAL PLUG VALVE (GAS)
	SOC	SHUT-OFF COCK (GAS)
	EAAV	EARTHQUAKE ACTUATED AUTOMATIC VALVE (GAS)
	S.V.	ELECTRIC SOLENOID VALVE (GAS)
R	P.R.	PRESSURE REGULATOR (GAS)
	POC	POINT OF CONNECTION
	T&P	TEMPERATURE & PRESSURE RELIEF VALVE
	VTR	VENT TO ROOF
	HD	HUB DRAIN
	FD	FLOOR DRAIN (COORDINATE GRATE REQS)
	FS	FLOOR SINK (COORDINATE GRATE REQS)
	RP	RECIRCULATION PUMP
	HB	HOSE BIBB
	T	THERMOSTAT
	KEC	KITCHEN EQUIPMENT CONTRACTOR
	BTUH	BRITISH THERMAL UNITS PER HOUR
	MBH	BTUH X 1000
	CFH	CUBIC FEET PER HOUR (1 MBH = 1 CFH)
	(E)	EXISTING
	I.E.	INVERT ELEVATION
	CONN	CONNECTION
	FU	FIXTURE UNITS
	GPM	GALLONS PER MINUTE
	GPH	GALLONS PER HOUR
	HP	HORSEPOWER
	PSI	POUNDS PER SQUARE INCH
	AP	ACCESS PANEL
	W/	WITH
	FLR	FLOOR
	CLG	CEILING
	ABV	ABOVE
	BEL	BELOW
	UG	UNDERGROUND
	DN	DOWN
	CONT.	CONTINUE
	TYP.	TYPICAL
	FOH	FRONT OF HOUSE
	BOH	BACK OF HOUSE
	A.D.A.	AMERICAN DISABILITIES ACT
	A.F.F.	ABOVE FINISH FLOOR
	B.F.F.	BELOW FINISH FLOOR

ENGINEER:

BRIAN E. CHANDLER, PE

6201 CAMPUS CIRCLE DRIVE E.
IRVING, TEXAS 75038
TEL: 972.870.1288
WWW.IDSTUDIO4.COM
E-MAIL: bchandler@idstudio4.com

CORPORATE:
BRINKER RESTAURANT CORPORATION,
A VIRGINIA CORPORATION
3000 OLYMPUS BLVD.
DALLAS, TEXAS 75019
972.980.9917
www.brinker.com

09/23/2024
ISSUE FOR BID
THESE DOCUMENTS ARE FOR BIDDING PURPOSES ONLY. DO NOT USE FOR CONSTRUCTION.

RESTAURANT #CH1679
PROTOTYPE 18.5FS

CHILI'S TOOELE
951 N MAIN STREET
TOOELE, UT 84074

CLIENT: BRINKER RESTAURANT CORP.
A VIRGINIA CORPORATION

DATE	DESCRIPTION
6/27/2024	ISSUE FOR PERMIT
9/23/2024	ISSUE FOR BID

	DATE	DESCRIPTION
3	09.10.2024	CITY COMMENTS

PROJECT NUMBER:
CHI24007

SHEET TITLE:
PLUMBING NOTES AND ABBREVIATIONS

SHEET NUMBER:
P401

HOT WATER DEMAND SCHEDULE

MARK	ITEM	QTY.	GPH	TOTAL GPH
LAV-1	LAVATORY	–	5	–
SS-1	SERVICE SINK FAUCET	–	20	–
–	2 COMPARTMENT SINK	–	45	–
–	KITCHEN HAND SINK	–	5	–
–	CHEF'S COUNTER SINK	–	20	–
–	SOILED DISHTABLE ASSEMBLY	–	20	–
–	PRE RINSE SINK	–	20	–
–	BOOSTER HEATER/ DISHWASHER	–	50	–
–	3 COMPARTMENT SINK	–	90	–
–	BAR HAND SINK	–	5	–
–	GLASS WASHER	–	15	–
	TOTAL			350

HOT WATER CALCULATIONS:

PEAK DEMAND

1. 350 GPH (PEAK DEMAND) X 0.40 (DEMAND FACTOR) = 140 GPH.
2. 140 GPH (DEMAND) X 1.0 (STORAGE FACTOR) = 140 GALS.
3. 350 GPH (PEAK DEMAND) / 60 MIN./HR = 5.8 GPM.
4. 50˚ DOMESTIC SUPPLY WATER TEMPERATURE.
5. 140˚ DESIGN SUPPLY HOT WATER FOR KITCHEN.
6. 500 GPM X ∆T = MIN. OUTPUT BTUH REQUIRED AT WATER HEATER. (500)(5.8)(90) = 261,000 BTUH.

PROBABLE DEMAND

1. 140 GPH (PROBABLE DEMAND) X 0.40 (DEMAND FACTOR) = 56 GPH.
2. 56 GPH (DEMAND) X 1.0 (STORAGE FACTOR) = 56 GALS.
3. 140 GPH (PROBABLE DEMAND) / 60 MIN./HR = 2.3 GPM.
4. 50˚ DOMESTIC SUPPLY WATER TEMPERATURE.
5. 140˚ DESIGN SUPPLY HOT WATER FOR KITCHEN.
6. 500 GPM X ∆T = MIN. OUTPUT BTUH REQUIRED AT WATER HEATER. (500)(2.3)(90) = 103,500 BTUH.

~~CAPACITY GROUPED~~

1. (1) GAS FIRED TANK TYPE WATER HEATERS INSTALLED WITH 796 MBH OUTPUT CAPACITY, CONTINUOUS RECOVERY, AND 84% EFFICIENT.

3

GAS DEMAND LOAD SCHEDULE

GREASE INTERCEPTOR CALCULATIONS

Reference No. 69618 — Project Name: Chili's - Tooele, UT

Step 1: Flow rate to grease interceptor

Fixture flow rate: (cu in / 231) = gal x 0.75 / 2 min = 2 min flow rate

NAME	TYPE	DIMENSIONS	QTY	CU IN	FLOW RATE
102 - Prep Sink One Bowl	Prep Sink One Bowl	21" x 21" x 14"	1	6,174	10.02 GPM
146 - Hand Sink	Hand Sink	10" x 12" x 6"	3	2,160	3.51 GPM
146A - Hand Sink	Hand Sink	12" x 12" x 6"	3	2,592	4.2 GPM
300 - Dishmachine	Dishwasher (Conveyor)	25 gal.	1	5,775	12.5 GPM
305 - 3 Compartment Sink	3 Compartment Sink	21" x 21" x 14" (3)	1	18,522	30.07 GPM
400 - Soda Tower	Floor Sink	N/A	1	N/A	0 GPM
401 - Tea Dispenser	Floor Sink	N/A	1	N/A	0 GPM
402 - Combi Coffee & Tea	Floor Sink	N/A	1	N/A	0 GPM
408 - Carbonators	Floor Sink	N/A	2	N/A	0 GPM
440 - Coffee Dispenser	Floor Sink	N/A	2	N/A	0 GPM
522 - Dipper Well	Dipper Well	N/A	1	N/A	2 GPM
530 - Portable Hot Food Well	Warming Table (with drain)	N/A	6	N/A	3 GPM
602 - Frozen Drink Machine (Bar)	Floor Sink	N/A	1	N/A	0 GPM
605 - Draft Beer Tower (Bar)	Floor Sink	N/A	1	N/A	0 GPM
613 - Glass Washer (Bar)	Dishwasher (Door Type)	10 gal.	1	2,310	5 GPM
618A - Cocktail Station/Ice (Bar)	Floor Sink	N/A	1	N/A	0 GPM
618B - Blender Station (Bar)	Floor Sink	N/A	1	N/A	0 GPM
631 - Hand Sink (Bar)	Hand Sink	10" x 12" x 6"	1	720	1.17 GPM
Floor Drain	Floor Drain	N/A	15	N/A	0 GPM
Floor Drain (Bar)	Floor Drain	N/A	1	N/A	0 GPM
Mop Sink	Mop Basin	24" x 24" x 10"	1	5,760	9.35 GPM
Total					**80.82 GPM**

Flow rate used to size interceptor (less of fixture or pipe size)
Pipe size (4 in):
Pipe Size flow rate per Manning's Formula — **75 GPM**

Step 2: Grease Production

Servings per day x Grease production value x Days between pump-outs = Grease output

Servings per day: 1000
Grease production value: 0.0455 lbs per serving (Bar and Grille: High / Flatware)
Days between pump-outs: 90 days

1000 x 0.0455 x 90 = 4095 lbs of FOG

SCHIER MODEL	
GB-1000	**Description: GREASE INTERCEPTOR 100 GPM / 200 GPM, 4"** PLAIN/FPT CONNECTIONS, H-20 RATED PICKABLE CAST IRON COVERS **Dimensions: Length: 92", Width: 73.75", Height: 71.25"** **Flow Rate/Grease Capacity: 100 GPM / 5495 lbs** **Liquid Capacity: 1000 gal**

PLUMBING EQUIPMENT SCHEDULE

MARK	FIXTURE	ROUGH-IN-SIZE S/W	V	CW	HW	DESCRIPTION/REMARKS
WH-1 WH-2 WH-3 WH-4	TANKLESS WATER HEATER	–	–	1 1/2"	1 1/2"	#TTS-SWH4MINI RACK ASSEMBLY, INCLUDES NORITZ GAS FIRED TANKLESS WATER HEATER MULTI-UNIT SYSTEM 199 MBH EA, PRE-INSTALLED SC-401-6M SYSTEM CONTROLLER, EXPANSION TANK AND RECIRCULATING PUMP. INSTALL REMOTE CONTROLLER #RC-9018M IN THE MANAGER'S OFFICE. REFER TO WATER HEATER EQUIPMENT PACKAGE NOTE BELOW FOR MORE INFORMATION. TO BE FURNISHED BY OWNER, INSTALLED BY PLUMBING CONTRACTOR.
TP-1	TRAP PRIMER	–	–	1/2"	–	ZURN #P6000-TPO, TRAP PRIMER ASSEMBLY FROM WATER CLOSET, PROVIDE DISTRIBUTION UNIT AS REQUIRED FOR SUPPLY TO MULTIPLE DRAINS WITH HIGH PRESSURE VACUUM BREAKER. INSTALL VALVE RECESSED IN WALL A MINIMUM 12" AFF, PROVIDE ACCESS DOOR.
WHA-1	WATER HAMMER ARRESTER	–	–	LINE SIZED	–	PPP, INC. SERIES SC, PRESSURE 35 PSI – 250 PRESSURE WITH A SPIKE PRESSUER OF 1500 PSI. FULLY MECHANICAL WATER HAMMER ARRESTER SIZED AND LOCATED PER THE MANUFACTURER SPECIFICATIONS.
MXV-1	MIXING VALVE	–	–	1/2"	1/2"	WILKINS #ZW1070XL LEAD FREE POINT OF USE THERMOSTATIC MIXING VALVE, AND BE CAPABLE OF ADJUSTABLE TEMPERATURE SETTINGS. FIELD ADJUST TO 110˚F.
	FAUCET AERATORS	–	–	LINE SIZED	–	ENCORE PLUMBING PRODUCTS #KN50-X201A (0.5 GPM FOR HAND SINKS), #KN50-X201-F (1.5 GPM FOR BAR SINKS)
CK	CHECK VALVE	–	–	–	–	WATTS REGULATOR #601 THREADED CHECK VALVE OF BRONZE BODY CONSTRUCTION. REFER TO DRAWINGS FOR PROPOSED LOCATIONS OF WATER SUPPLY CHECK VALVES.
RPZ-1	REDUCED PRESSURE BACKFLOW PREVENTER	–	–	LINE SIZED	–	WATTS REGULATOR SS009 REDUCED PRESSURE ZONE ASSEMBLY WATER SUPPLY TO CARBONATOR(S) SHALL BE PROTECTED BY AN APPROVED REDUCED PRESSURE PRINCIPLE BACKFLOW PREVENTER AND SHALL BE RATED FOR 150 PSI, THE BODY & ADAPTERS ARE OF STAINLESS STEEL CONSTRUCTION, ALL RUBBER COMPONENTS COMPLY WITH FDA FOOD ADDITIVE REGULATIONS. THE MODEL IS SUBJECT TO LOCAL HEALTH DEPARTMENT APPROVAL WATTS SB-2.
RPZ-2	REDUCED PRESSURE BACKFLOW PREVENTER	–	–	LINE SIZED	–	WATTS REGULATOR 009 REDUCED PRESSURE ZONE ASSEMBLY WATER SUPPLY TO WATER SOFTENER(S) SHALL BE PROTECTED BY AN APPROVED REDUCED PRESSURE PRINCIPLE BACKFLOW PREVENTER AND SHALL BE RATED FOR 150 PSI, THE BODY & ADAPTERS ARE OF BRONZE CONSTRUCTION, ALL RUBBER COMPONENTS COMPLY WITH FDA FOOD ADDITIVE REGULATIONS. THE MODEL IS SUBJECT TO LOCAL HEALTH DEPARTMENT APPROVAL WATTS SB-2.
BFP-1	BACKFLOW PREVENTER	–	–	LINE SIZED	–	WATTS REGULATOR SD-3 DUAL CHECK WITH ATMOSPHERIC PORT. WATER SUPPLY TO BEVERAGE FIXTURE APPLIANCES, ICE MAKERS, ETC. SHALL BE PROTECTED BY AN APPROVED BACKFLOW PREVENTER AND SHALL BE RATED FOR CONTINUOUS OR INTERMITTENT PRESSURE, STAINLESS STEEL BODY CONSTRUCTION AND ALL RUBBER INTERNAL COMPONENTS.
BFP-2	BACKFLOW PREVENTER	–	–	LINE SIZED	–	AMES C300 DOUBLE CHECK DETECTOR ASSEMBLY. FIRE WATER SERVICE TO THE BUILDING SHALL BE PROTECTED BY AN APPROVED BACKFLOW PREVENTER AND SHALL BE AVAILABLE TO BE INSTALLED IN THE VERTICAL RISER. VERIFY ACTUAL SIZE WITH THE FIRE SPRINKLER CONTRACTOR, AND APPROVAL WITH THE UTILITY AND JURISDICTION PRIOR TO INSTALLATION.
BFP-3	BACKFLOW PREVENTER	–	–	LINE SIZED	–	WATTS REGULATOR 007 DOUBLE CHECK VALVE ASSEMBLY. DOMESTIC WATER SERVICE TO THE BUILDING AND ROOF TOP HOSE BIBB(S) SHALL BE PROTECTED BY AN APPROVED BACKFLOW PREVENTER AND SHALL BE RATED FOR 150 PSI, TWO POSITIVE SEATING CHECK MODULES WITH CAPTURED SPRINGS AND RUBBER SEAT DISCS. VERIFY APPROVAL WITH UTILITY AND JURISDICTION PRIOR TO INSTALLATION.
VB-1	VACUUM BREAKER	–	–	–	LINE SIZED	WATTS REGULATOR 288-A ATMOSPHERIC TYPE ANTI-SIPHON VACUUM BREAKER WITH INTERNAL LIGHT WEIGHT DISC FLOAT WITH SILICONE DISC FOR TIGHT SEATING.
GI-X	GREASE INTERCEPTOR	4"	4"	–	–	SCHIER #GB-1,000 HYDROMECHANICAL POLYETHYLENE GREASE INTERCEPTOR, 200 GPM WITH 3,939 LBS OF GREASE CAPACITY. REFER TO CIVIL FOR LOCATION AND LAYOUT RELATIVE TO THE BUILDING. REFER TO P1.3 FOR ADDITIONAL INFORMATION.
FCV-1	FLOW CONTROL VALVE	–	–	–	3/4"	GRISWOLD #3522 AUTOMATIC FLOW CONTROL VALVE (PROVIDED BY OWNER INSTALLED BY CONTRACTOR) SET TO 2.0 G.P.M.
SW-1	SAMPLE WELL	4"	–	–	–	SCHIER #SV10 POLYETHYLENE SAMPLE WELL PORT, REFER TO CIVIL FOR LOCATION AND LAYOUT RELATIVE TO THE BUILDING. REFER TO SHEET P1.3 FOR MORE INFORMATION.
WS-1 RO-1	WATER SOFTENER RO SYSTEM	–	–	2"	–	WATER SOFTENER / RO SYSTEM TO BE FURNISHED BY OWNER AND INSTALLED BY THE PLUMBING CONTRACTOR.

WATER HEATER EQUIPMENT PACKAGE

NOTES:

1. BRINKER INTERNATIONAL HAS A NATIONAL ACCOUNT AGREEMENT WITH FACILITIES RESOURCE GROUP FOR THE WATER HEATER PACKAGE. THE ASSEMBLY CONSISTS OF THE SCHEDULED WATER HEATERS, WALL MOUNTED RACK ASSEMBLY, RECIRCULATION PUMP, COMBUSTION FLUE COMMON VENT KIT, EXPANSION TANK, ALARM LIGHT, CONDENSATE NEUTRALIZER KIT, AND OTHER APPURTENANCES.
2. THE WATER HEATER PACKAGE SHALL BE ORDERED BY BRINKER INTERNATIONAL AND INSTALLED BY THE PLUMBING CONTRACTOR.
3. UPON COMPLETION OF THE EQUIPMENT INSTALLATION, THE GENERAL CONTRACTOR SHALL CONTACT DAN STEERE AT FACILITIES RESOURCE GROUP 877-554-0004/DSTEERE@WEBFRG.COM TO SCHEDULE AN INSPECTION OF THE EQUIPMENT AND OBSERVANCE FOR PROPER STARTUP.
4. ONCE SATISFIED WITH PROPER OPERATION AND INSTALLATION, FACILITIES RESOURCE GROUP SHALL ISSUE CERTIFICATION TO BRINKER INTERNATIONAL AND ASSUME RESPONSIBILITY FOR WARRANTY WITH THE COMPLETE WATER HEATER PACKAGE.
5. SHOULD THE INSTALLATION NOT PASS THE FACILITIES RESOURCE GROUP INSPECTION, THE INSTALLING CONTRACTOR WILL BE NOTIFIED OF OUTSTANDING INSTALLATION ISSUES. THE PLUMBING CONTRACTOR IS RESPONSIBLE FOR ALL TIME AND MATERIALS TO EFFECT NECESSARY CHANGES FOR A REINSPECTION OF THE EQUIPMENT.

GAS DEMAND LOAD SCHEDULE

NO.	DESCRIPTION	CONN. SIZE	QTY.	INPUT (MBH/EA)	TOTAL (MBH)
131	IMPINGER	3/4"	1	89	89
201	FRYER ASSEMBLY	1 1/4"	1	300	300
215	GRIDDLE	3/4"	1	120	120
WH-X	WATER HEATERS	1 1/2"	4	199	796
RTU-1	RTU-1	1"	1	240	240
RTU-2	RTU-2	1"	1	240	240
RTU-3	RTU-3	1"	1	240	240
MAU-1	MAU-1	1"	1	256	256
		COOKING APPLIANCE SUB-TOTAL			509
		WATER HEATING SUB-TOTAL			796
		HVAC SUB-TOTAL			976
		MISC. SUB-TOTAL			–
		GAS DEMAND TOTAL (MBH)			2,281
		GAS DEMAND TOTAL (CFH)			2,281
		GAS DEMAND TOTAL (BTUH)			2,281,000

NOTE(S):

1. THE ACTUAL LENGTH FROM THE METER TO THE MOST REMOTE APPLIANCE CONNECTION IS 100'-00 THE SYSTEM IS SIZED FOR A TOTAL DEVELOPED LENGTH OF MAXIMUM 150'-0".
2. THE SERVICE TO THE BUILDING SHALL BE INSTALLED AS MEDIUM PRESSURE SUPPLY (INLET PRESSURE OF 2.0 PSI).
3. PIPE SIZES SHOWN ON THE RISER DIAGRAM ARE BASED ON 2021 INTERNATIONAL FUEL GAS CODE, WITH LOCAL AMENDMENTS, TABLE 402.4(2) FOR NATURAL GAS. VERIFY FIELD CONDITIONS FOR ACTUAL DEVELOPED LENGTH AND POSSIBLE ADJUSTMENTS TO PIPE SIZES.
4. THE CONTRACTOR SHALL COORDINATE WITH THE UTILITY FOR THE PROVISION OF THE COMPLETE METER ASSEMBLY INCLUDING REGULATOR AND VENTING REQUIREMENTS.

BACKFLOW DEVICE SCHEDULE

ITEM/ FIXTURE	ITEM/ EQUIPMENT #	BACKFLOW DEVICE
BAG-N-BOX SODA SYSTEM	–	RPZ-1
WATER SOFTENER(S)	–	RPZ-2
TEA BREWER(S)	–	BFP-1
COFFEE MACHINE(S)	–	
ICE MAKER(S)	–	
ECOLAB CONNECTION(S)	–	
SODA DISPENSER(S)	–	
FIRE WATER SERVICE	–	BFP-2
DOMESTIC WATER SERVICE	–	BFP-3
DISHWASHER	=	VB-1
POT FILL FAUCET(S)	–	INTEGRAL
WALL HOSE BIBB(S)	–	
SERVICE SINK	–	

PLUMBING FIXTURE SCHEDULE

MARK	FIXTURE	ROUGH-IN-SIZE S/W	V	CW	HW	DESCRIPTION/REMARKS
WC-1	WATER CLOSET	4"	2"	1 1/2"	–	ZURN #Z5665-BWL1, FLOOR MOUNTED, WHITE, 1.28 GALLON PER FLUSH, ELONGATED, LOW WATER USE VITREOUS CHINA SIPHON JET WITH 1-1/2" TOP SPUD. FURNISH COMPLETE WITH MANUAL ACTION FLUSH VALVE, ZURN #Z6000AV-ONE AND ZURN # Z5955SS-EL-STS, OPEN FRONT HEAVY DUTY SEAT, AND SELF-SUSTAINING SS CHECK HINGE.
WC-2	WATER CLOSET (ADA)	4"	2"	1 1/2"	–	ZURN #Z5665-BWL1, ADA COMPLIANT FLOOR MOUNTED, WHITE, 1.28 GALLON PER FLUSH, ELONGATED, LOW WATER USE VITREOUS CHINA SIPHON JET WITH 1-1/2" TOP SPUD. FURNISH COMPLETE WITH MANUAL ACTION FLUSH VALVE, ZURN #Z6000AV-ONE AND ZURN # Z5955SS-EL-STS, OPEN FRONT HEAVY DUTY SEAT, AND SELF-SUSTAINING SS CHECK HINGE.
UR-1	URINAL (ADA)	2"	1 1/2"	3/4"	–	AMERICAN STANDARD WASHBROOK #6590.501, UNIVERSAL TOP SPUD 0.5 GPF WITH ZURN #Z6003 0.5 FLUSH VALVE. ADA COMPLIANT LOW WATER USE VITREOUS CHINA WALL HUNG, SIPHON JET ACTION WITH 3/4" TOP INLET SPUD. PROVIDE WITH FLUSHING RIM, 2" OUTLET CONNECTION AND VANDAL RESISTANT OUTLET STRAINER. INSTALL COMPLETE WITH CONCEALED WALL CARRIER.
LAV-1	LAVATORY (ADA)	2"	1 1/2"	1/2"	1/2"	PROFLO #PF1713UWH, ADA RECTANGLE UNDERCOUNTER LAVATORY, WHITE VITREOUS CHINA WITH ZURN FAUCET #Z7440-XL, SINGLE CONTROL ADA COMPLIANT CENTERSET FAUCET, LESS POP-UP DRAIN AND HOLE, BRASS BODY WITH POLISHED CHROME FINISH, .35 GPM AREATOR. INSTALL COMPLETE WITH ZURN #Z8700-PC CHROME PLATED CAST BRASS BODY P-TRAP WITH CLEANOUT, ZURN #Z8746-PC OFFSET GRID STRAINER, ZURN #Z8804-XL-LR-8860-20PC SUPPLY KIT WITH FLEXIBLE HOSES, ZURN #Z8946-3-NT COMBO KIT FOR DRAIN AND TRAP AND SUPPLY STOP PROTECTORS FOR ADA PROTECTION.
FD-1	FLOOR DRAIN	3"	2"	–	–	ZURN #ZN415SH-3-NL-P DURA-COATED CAST IRON FLOOR DRAIN WITH INVERTIBLE MEMBRANE CLAMP & ADJUSTABLE COLLAR FOR A 8" SQUARE POLISHED NICKEL BRONZE STRAINER..
FD-2	FLOOR DRAIN	3"	2"	–	–	ZURN #LC-P3S PVC BODY FLOOR DRAIN, WITH #LC-CS CAST IRON ADAPTOR THREADED SHANK. PROVIDE 1/2" TRAP PRIMER WHERE SHOWN ON THE PLANS.
FS-1	FLOOR SINK	3"	2"	–	–	ZURN #FD-2370-PV3-H-Y 12" SQUARE PVC FLOOR SINK WITH 1/2 OPEN PVC GRATE AND STAINLESS SEDIMENT BUCKET. #GDL-3000, GUARDIAN DRAIN-LOCK HYBRID LOCKABLE STRAINER.
FS-2	FLOOR SINK	3"	2"	–	–	ZURN #Z1900-3-NL-2-25, 12" SQUARE BY 6" DEEP CAST IRON BODY FLOOR SINK WITH WHITE PORCELAIN ENAMEL INTERIOR AND NICKEL BRONZE TOP WITH HALF GRATE, AND DRAIN NET #DLB-10751 BASKET. #GDL-DOME-3000 GUARDIAN DOME-D-LOCK CAST ALUMINUM DOME STRAINER.
FS-3	FLOOR SINK	3"	2"	–	–	ZURN #Z1910-3-NL-2-25, 8" SQUARE BY 6" DEEP CAST IRON BODY FLOOR SINK WITH WHITE PORCELAIN ENAMEL INTERIOR AND NICKEL BRONZE TOP, HALF GRATE, AND DRAIN NET #DLB-8001 BASKET. #GDL-DOME-3000 GUARDIAN DOME-D-LOCK CAST ALUMINUM DOME STRAINER.
FS-4	FLOOR SINK	4"	2"	–	–	ZURN #FD-2370-PV4-H-Y 12" SQUARE PVC FLOOR SINK WITH 1/2 OPEN PVC GRATE AND STAINLESS SEDIMENT BUCKET. #GDL-4000, GUARDIAN DRAIN-LOCK HYBRID LOCKABLE STRAINER.
SYD	SERVICE YARD DRAIN	4"	–	–	–	ZURN #Z610-3-NL-HL-YC, CAST IRON, 12X12 HEAVY DUTY, AREA DRAIN, CAST IRON SEDIMENT BUCKET AND HINGED, LOCKABLE GRATE.
FCO	FLOOR CLEANOUT	LINE SIZED	–	–	–	JOSAM #56670, CAST IRON BODY SCORIATED CUT-OFF SECTION, BRONZE INTERNAL PLUG & NICKLE CHROME SCORIATED COVER PLATE SECURED TO PLUG BY COUNTERSUNK SCREW. FLOOR CLEANOUTS IN TILE FLOOR SHALL HAVE SQUARE COVERS.
WCO	WALL CLEANOUT	LINE SIZED	–	–	–	JOSAM #58610, CAST IRON CAULKING FERRULE WITH BRONZE PLUG & STAINLESS STEEL COVER PLATE & FRAME.
HB-1	HOSE BIBB	–	–	3/4"	–	ZURN #Z1341XL-P34 EXPOSED AUTOMATIC DRAINING MODERATE CLIMATE WALL HYDRANT, WITH VACUUM BREAKER, ROUGH BRASS EXTERIOR AND SS & BRONZE INTERIOR PARTS. COMBI-OVEN & TESTING WATER SOFTNER.
HB-2	HOSE BIBB	–	–	3/4"	3/4"	WOODFORD #HC67 AUTOMATIC DRAINING FREEZELESS WALL FAUCET, WITH NIDEL #50HA BACKFLOW PREVENTER AND ROUGH BRASS FINISH.
MS-1	MOP SINK	3"	2"	3/4"	3/4"	ZURN #Z1996-24 MOP SINK WITH ZURN #Z842D6-LS1-LVB-PE-2XT NON THREADED WALL MOUNTED CLINICAL SERVICE SINK FAUCET W/ PAIL HOOK, INTEGRAL STOPS, MOLDED HIGH DENSITY COMPOSITE BASIN 24X24X10 MODEL WITH 3" DRAIN OUTLET, AND STAINLESS STEEL STRAINER.
HD-1	HUB DRAIN	3"	2"	–	–	FIELD FABRICATED PVC BODY HUB DRAIN WITH BOTTOM OUTLET AND PVC REDUCER. TOP OF THE HUB SHALL BE 6" AFF.
DN-1	DOWNSPOUT NOZZLE	2"	–	–	–	JOSAM #25010-BS ROOF DRAIN DOWNSPOUT NOZZLE, FURNISHED WITH 3" COATED CAST BRONZE BODY WITH LOOSE WALL FLANGE AND 3"x2" C.I. REDUCING BUSHING, INLET THREADED CONNECTION, COUNTERSUNK HOLES.

NOTE(S):

1. PROVIDE ALL CARRIERS & SUPPORTS MATERIALS REQUIRED FOR A SOLID, SECURE INSTALLATION.
2. PROVIDE ALL COVERS, ESCUTCHEONS, & MISCELLANEOUS TRIM ITEMS FOR A NEAT APPEARANCE.
3. ALL MOUNTING HEIGHTS SHALL BE VERIFIED WITH THE ELEVATIONS SHOWN ON THE ARCHITECTURAL PLANS.
4. ALL SUPPLIES SHALL BE CHROME PLATED.
5. PROVIDE ADA COMPLIANT WRAPS FOR ALL DRAIN AND WATER PIPING UNDER SINKS, LAVATORIES & COUNTERS DESIGNATED FOR USE BY THE HANDICAPPED.
6. ALL DRAIN & CLEANOUTS SHALL BE FURNISHED & INSTALLED AS REQUIRED AND AS SHOWN. DRAINS SHALL HAVE CAST IRON BODIES WITH SCREWED OR CAULKED CONNECTIONS OF THE SIZES AND TYPES SHOWN & SPECIFIED. PROVIDED DEEP SEAL P-TRAPS ON ALL FLOOR DRAINS CONNECTED TO THE SANITARY SYSTEM.

PIPING MATERIAL SCHEDULE

1.	WATER PIPE (ABOVE GROUND)	UPONOR "AQUAPEX" CROSSLINKED POLYETHYLENE (PEX-a) PIPING MEETING ASTM F 877, SDR 9 STANDARDS WITH MANUFACTURER AVAILABLE ENGINEERED POLYMER (EP) COLD EXPANSION FITTINGS AND PEX REINFORCING RINGS MEETING ASTM F 1960. PIPING SHALL BE INSTALLED PER MANUFACTURER'S RECOMMENDATIONS AND SHALL NOT BE INSTALLED WHERE IT IS EXPOSED TO SUNLIGHT. FIELD COORDINATE THE INSTALLATION OF MANUFACTURED PIPING COLOR AND PIPING LENGTHS TO RUN AS STRAIGHT AS POSSIBLE UTILIZING PEX-a PIPE SUPPORTS. ALL PIPING AND FITTINGS SHALL BE BY THE SAME MANUFACTURER.
2.	WATER PIPE (BELOW GROUND)	UPONOR "AQUAPEX" CROSSLINKED POLYETHYLENE (PEX-a) PIPING MEETING ASTM F 877, SDR 9 STANDARDS. NO JOINTS OR FITTINGS SHALL BE INSTALLED BELOW THE BUILDING SLAB. FIELD COORDINATE THE INSTALLATION OF MANUFACTURED PIPING COLOR AND PIPING LENGTHS TO RUN AS STRAIGHT AS POSSIBLE. ALL PIPING AND FITTINGS SHALL BE BY THE SAME MANUFACTURER.
3.	WATER PIPE (INSULATION)	ALL WATER PIPING SHALL BE INSTALLED COMPLETE WITH INSULATION EITHER IN CONCEALED OR EXPOSED LOCATIONS. REFER TO GENERAL NOTES FOR INSULATION THICKNESS INFORMATION.
4.	SEWER AND VENT PIPE (ABOVE AND BELOW GRADE)	DWV SCHEDULE 40 POLYVINYL CHLORIDE (PVC) PIPING. INSIDE BUILDING SERVICE WEIGHT (HUBLESS) CAST IRON SOIL PIPE AND STAINLESS STEEL NO HUB COUPLINGS SHALL BE UTILIZED FOR THE FIRST 10'-0" OF PIPING RECEIVING DISCHARGE FROM DISHWASHER(S) AND RETHERMALIZER(S).
5.	CONDENSATE DRAIN PIPE AND INDIRECT DRAINAGE PIPE (INTERIOR TO BUILDING)	TYPE 'M' COPPER WITH 95/5 SILVER SOLDER JOINT FITTINGS. INSULATE CONDENSATE PIPING WITH 1/2" ARMAFLEX CLOSED CELL PIPE INSULATION WITH SELF SEALING ADHESIVE JOINTS, OR EQUIVALENT.
6.	CONDENSATE DRAIN PIPE (EXTERIOR TO BUILDING)	TYPE 'M' COPPER WITH 95/5 SILVER SOLDER JOINT FITTINGS.
7.	STORM DRAIN PIPE (ABOVE AND BELOW GRADE)	DWV SCHEDULE 40 POLYVINYL CHLORIDE (PVC) PIPING. INSULATE ABOVE GROUND IN BUILDING PIPING WITH 1/2" ARMAFLEX CLOSED CELL PIPE INSULATION WITH SELF SEALING ADHESIVE JOINTS, OR EQUIVALENT.
8.	GAS PIPE	SCHEDULE 40 BLACK STEEL WITH MALLEABLE IRON FITTINGS. WELDED JOINTS FOR PIPE 2-1/2" AND LARGER AND ALL JOINTS BELOW GRADE.
9.	SLEEVE PIPE FOR BEER, REFRIGERANT, CO2, AND SYRUP BUNDLES	SCHEDULE 40 PVC EXCEPT WHERE SPECIFICALLY NOTED OTHERWISE, AND MUST BE WATER TIGHT. ALL BENDS MUST BE NO LESS THAN 24" RADIUS SWEEPS, U.N.O.

ENGINEER:

BRIAN E. CHANDLER, PE

6201 CAMPUS CIRCLE DRIVE E.
IRVING, TEXAS 75038
TEL: 972.870.1288
WWW.IDSTUDIO4.COM
E-MAIL: bchandler@idstudio4.com

CORPORATE:
BRINKER RESTAURANT CORPORATION,
A VIRGINIA CORPORATION
3000 OLYMPUS BLVD.
DALLAS, TEXAS 75019
972.980.9917
www.brinker.com

09/23/2024
ISSUE FOR BID
THESE DOCUMENTS ARE FOR BIDDING PURPOSES ONLY. DO NOT USE FOR CONSTRUCTION.

RESTAURANT #CH1679
PROTOTYPE 18.5FS

CHILI'S TOOELE
951 N MAIN STREET
TOOELE, UT 84074

CLIENT: BRINKER RESTAURANT CORP.
A VIRGINIA CORPORATION

DATE	DESCRIPTION
6/27/2024	ISSUE FOR PERMIT
9/23/2024	ISSUE FOR BID

	DATE	DESCRIPTION
3	09.10.2024	CITY COMMENTS

PROJECT NUMBER:
CHI24007

SHEET TITLE:
PLUMBING SCHEDULES

SHEET NUMBER:
P402

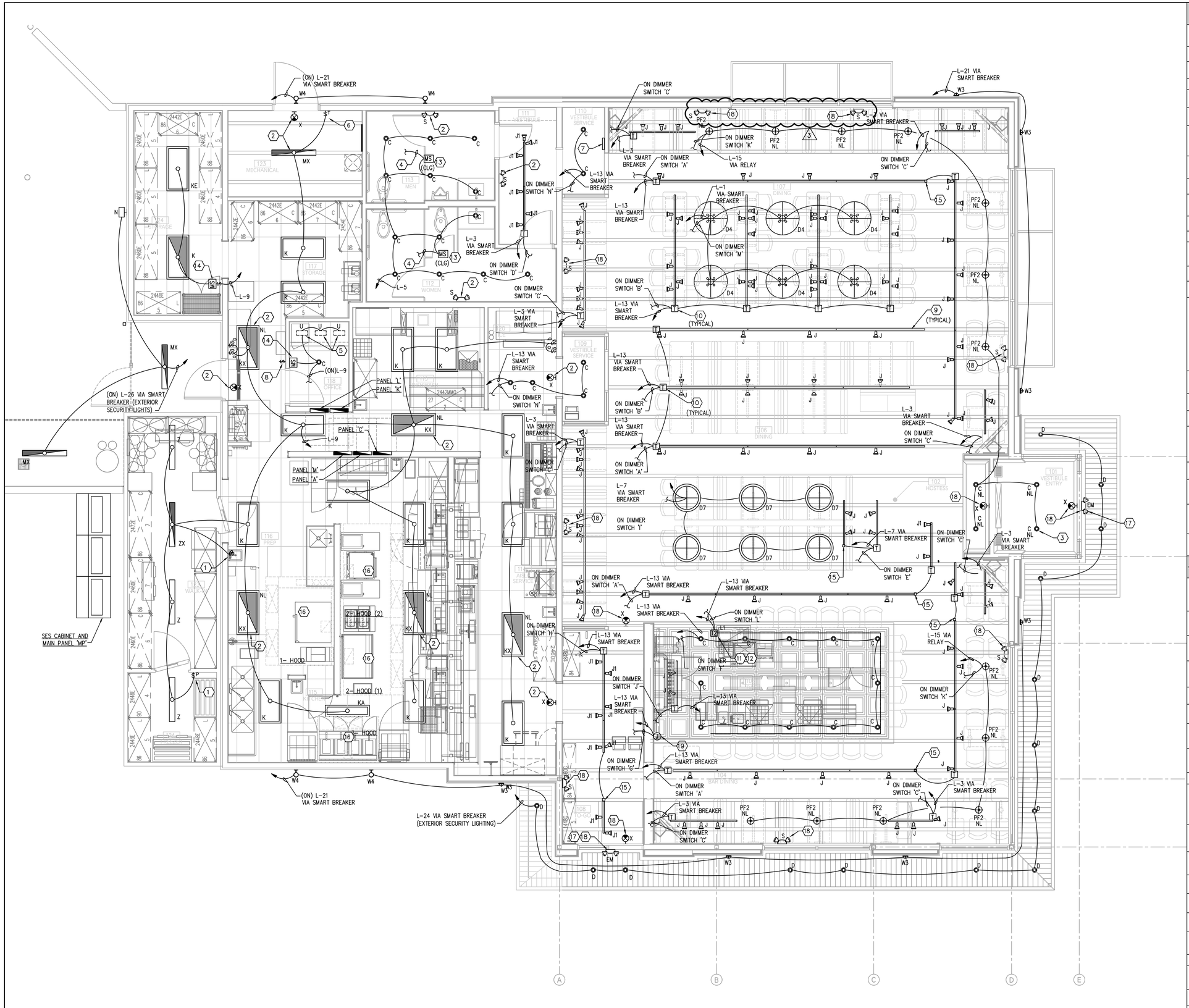

ELECTRICAL LIGHTING PLAN
1/4"=1'-0"

1

GENERAL NOTES

A.	CONTRACTOR IS RESPONSIBLE FOR FIELD VERIFICATION OF ALL CONDITIONS AND IS ALSO RESPONSIBLE FOR REPORTING ANY CONFLICTS TO THE ENGINEER PRIOR TO THE START OF WORK.
B.	VERIFY EXACT LOCATIONS OF ALL LIGHT FIXTURES AND SIGNS WITH ARCH. DRAWINGS. VERIFY LOCATIONS OF SIGN CONNECTIONS WITH SIGN CONTRACTOR.
C.	COORDINATE WITH OWNER AND LANDLORD FOR LIGHTING TIMECLOCK/PHOTOCELL PROGRAMMING.
D.	REFER TO SHEET "E202", FOR LIGHT FIXTURE SCHEDULE.
E.	REFER TO SHEET "E203" AND ASSOCIATED DIAGRAMS FOR LIGHTING CIRCUITS ON TIMECLOCK/PHOTOCELL AND SMART BREAKERS.
F.	FIXTURES WITH "NL" INDICATE NIGHT LIGHT FUNCTION THAT SHALL BE UNSWITCHED AND SHALL NOT BE CIRCUITED VIA TIMECLOCK/CONTACTORS.
G.	EMERGENCY UNIT FIXTURES (BUG EYES) AND EXIT SIGNS SHALL BE UNSWITCHED. CONNECT EXIT SIGNS AND EMERGENCY BATTERY UNITS AHEAD OF LIGHT SWITCH AND DIMMING MODULES AND EXTEND ADDITIONAL "HOT" CONDUCTOR TO KEEP DEVICES UNSWITCHED
H.	ALL EXIT SIGNS AND EMERG FIXTURES SHALL BE FURNISHED WITH BATTERY BACKUP FOR A MINIMUM OF 90 MINUTES. FIXTURES WITH EMERGENCY BALLAST SHALL POWER ONE LAMP FOR A MINIMUM OF 90 MINUTES.
I.	LOWER CASE LETTERS NEXT TO LIGHT FIXTURE SYMBOL REPRESENTS SWITCHING CONTROLS, UNLESS NOTED OTHERWISE.
J.	PROVIDE SHATTER RESISTANT LENSES ON ALL LIGHT FIXTURES LOCATED OVER FOOD PREP, KITCHEN, AND STORAGE AREAS. PROVIDE SHATTERPROOF LAMPS FOR OVER BAR TOP AND IN BAR AREA.
K.	LOW VOLTAGE LIGHTING TRANSFORMERS SHALL BE PROVIDED WITH INTERNAL PRIMARY AND SECONDARY FUSING PER NEC.
L.	PROVIDE ALL LIGHTING IN MILLWORK PER ARCHITECTURAL DRAWINGS.
M.	CONTRACTOR SHALL BE RESPONSIBLE FOR INSTALLATION OF COOLER/FREEZER LIGHT FIXTURES. COORDINATE INSTALLATION AND CONNECTIONS WITH KITCHEN CONSULTANT DRAWINGS. REFER TO POWER SHEET "E102" FOR ADDITIONAL INFORMATION.
N.	SEAL ALL CONDUITS ENTERING COOLERS AND FREEZERS PER NEC ARTICLE 300.7 WITH APPROVED METHOD AND APPROVED MATERIALS.
O.	REFER TO SHEET "E201" FOR ENLARGED TRASH ENCLOSURE AREA AND ADDITIONAL LIGHTING REQUIREMENTS.
P.	THE CONTRACTOR SHALL LOCATE AND AIM ALL OCCUPANCY SENSORS IN THE CORRECT QUANTITIES AS REQUIRED FOR COMPLETE (100%) COVERAGE OF THE CONTROLLED AREAS, PER THE MANUF.'S RECOMMENDATIONS. WALL/CEILING MOUNTED OCCUPANCY SENSORS SHALL BE WATTSTOPPER OR APPROVED EQUIVALENT WITH POWER PACK AND ALL REQUIRED ACCESSORIES. WHERE CLG MTD SENSORS ARE SHOWN WITH WALL SWITCHES FOR CONTROL OF THE SAME AREA, CONNECT SENSOR/POWER PACK DOWNSTREAM OF WALL SWITCH. WALL MOUNTED: WS-250 CEILING MOUNTED: WPIR, CI, DT, WT POWER PACKS: S120E-P, B347D-P OR BZ-150
Q.	CONTRACTOR SHALL BE RESPONSIBLE FOR HOOKING UP ALL HOOD LIGHTS, SEE MECHANICAL DRAWINGS FOR ADDITIONAL INFORMATION. REFER TO SHEET "E102" FOR CIRCUITING.
R.	PROVIDE ADDITIONAL BLOCKING WHERE NECESSARY TO INSTALL ALL LIGHTING AND POWER OUTLETS IN EXACT LOCATIONS.
S.	ELECTRICAL CONTRACTOR TO COORDINATE LIGHT FIXTURE AIMING WITH ARCHITECT AFTER FURNITURE HAS BEEN SET UP.
T.	ALL FLEXIBLE METAL CONDUIT NOT CONCEALED IN WALLS OR ABOVE CEILING SHALL BE LIQUID TIGHT AND INSTALLED PER NEC ARTICLE 348. ALL CONDUITS INSTALLED ABOVE THE CEILING, IN THE T-BAR CEILING AREAS SHALL BE INSTALLED ABOVE THE BOTTOM CORD OF THE TRUSSES. DROPS TO LIGHT FIXTURES SHALL BE DIRECTLY ABOVE THE FIXTURE.
U.	ALL LIGHT FIXTURE TRIMS SHALL SIT FLUSH WITH FINISHED CLG, CHECK FOR "LIGHT LEAKS". ALL LIGHT FIXT REFLECTORS SHALL BE CLEANED OF ALL DIRT.
V.	12", 18", 24", 36" DESIGNATIONS NEXT TO "J" LIGHTS INDICATES WAND LENGTH. IF NO WAND LENGTH DESIGNATED THEN "J" LIGHT IS TO BE MOUNTED DIRECTLY TO TRACK.
W.	ELECTRICAL CONTRACTOR TO COORDINATE TRACK LIGHT FIXTURE LOCATIONS THAT ARE CROSSING DUCT SOX LOCATIONS AS NOTED ON THE MECHANICAL DRAWING. THOSE TRACK LIGHTS FIXTURES IN QUESTION ARE REQUIRED TO BE DROPPED 12" TO ACCOMMODATE DUCT.

KEYED NOTES

#	
1.	COORDINATE WITH EQUIPMENT SUPPLIER FOR EXACT COOLER/FREEZER LIGHT CONNECTION TO DOOR HEATER AND ALL OTHER INSTALLATION REQUIREMENTS. PILOT LIGHT SWITCH PROVIDED WITH WALK-IN COOLER/FREEZER.
2.	EMERGENCY FIXTURES SHALL HAVE EMERGENCY BATTERY PACK/BALLAST TO POWER ONE LAMP FOR 90 MINUTES. EXTEND ADDITIONAL HOT CONDUCTOR TO EMERGENCY BALLAST, BALLAST SHALL BE UNSWITCHED. CONNECT TO CIRCUIT L-9.
3.	ALL NIGHT LIGHT FIXTURES ON THIS CIRCUIT SHALL BE DIMMABLE. PROVIDE LABEL ON DIMMER SWITCH TO CLEARLY NOTE THAT LIGHTS SHALL REMAIN ON DURING AFTER HOURS (DO NOT SWITCH "OFF" SECURITY LIGHTS).
4.	CONNECT EXHAUST FAN 'TEF-1' ON ROOF TO RESTROOM LIGHTING CIRCUIT. OCCUPANCY SENSORS SHALL ACTIVATE EXHAUST FAN WHEN OCCUPANT IS DETECTED IN EITHER RESTROOM(S).
5.	PROVIDE INTEGRAL ROCKER SWITCH WITH UNDERCABINET LIGHT FIXTURE TYPE 'U' AND CONNECT TO OCCUPANCY SENSOR WITH RECESSED DOWN LIGHT.
6.	PROVIDE INTERMATIC #FF30 SERIES, SPRING WOUND SINGLE-POLE, SINGLE-THROW (SPST) 30 MINUTE TIMER SWITCH IN SINGLE GANG BOX & COVERPLATE.
7.	LIGHT SWITCH BANK (DIMMERS) FOR DINING/BAR/TO-GO AREAS. PROVIDE LABELS FOR EACH SWITCH TO INDICATE AREA OF CONTROL. REFER TO SHEET "E203" FOR LABELS.
8.	TIMED OVERRIDE SWITCH, INTERMATIC MODEL #FF32H SERIES, OR APPROVED EQUAL. PROVIDE WITH A MAX OF 2-HR OVERRIDE FOR INTERIOR BUILDING LIGHTS FOR USE DURING AFTER HOURS.
9.	MOUNT TRACK LIGHT TO BOTTOM SIDE OF CEILING JOIST.
10.	PROVIDE TRACKS WITH 120-12VDC (75W) LOW VOLTAGE TRANSFORMER EQUAL TO HATCH MODEL #LS12-75ENT WITH INTEGRAL THERMAL PROTECTION (OR APPROVED EQUAL). CONNECT A MAX OF (8) TYPE 'J' OR 'J1' FIXTURES PER EACH TRANSFORMER. HIDE TRANSFORMERS BETWEEN TRUSS FLANGES (OR ABOVE ACCESSIBLE CEILING) TO CONCEAL FROM VIEW. MOUNT TRACKS TO BOTTOM OF TRUSS OR PER OWNER REQUIREMENTS.
11.	PROVIDE TRANSFORMER "T2", #LEDC-M60L12DC, FOR NEW BAR TOP LED TAPE LIGHT, TYPE 'L1'. ONE 60W, DIMMABLE TRANSFORMER PER ROLL (16.4FT) OF TAPE LIGHT. LOCATE TRANSFORMER ON BAR SIDE.
12.	MOUNT TRANSFORMER AS CLOSE TO UNDERSIDE OF BAR TOP, ON BAR SIDE, AS POSSIBLE AND PROVIDE DRILL THRU BAR DIE WALL TO CONNECT TO LED LIGHTS AT CUSTOMER SIDE.
13.	PROVIDE CEILING MOUNTED MOTION SENSOR. SENSOR SHALL BE WATT STOPPER #W-500-WH.
14.	COMBINATION WALL SWITCH / OCCUPANCY SENSOR EQUIVALENT TO WATT STOPPER #CS-50-WH.
15.	PROVIDE 120W CURRENT LIMITER WITH END FEED. CURRENT LIMITER SHALL BE JUNO #RCLF11BL/TCL1BL.
16.	GENERAL CONTRACTOR TO PROVIDE AND INSTALL LAMPS FOR HOOD LIGHTS. LAMPS WILL BE A TCP LED18A21D0D50K. LAMPS ARE AVAILABLE THRU MELETIO. REFER TO LIGHT FIXTURE SCHEDULE ON DRAWING E202.
17.	EXTERIOR EMERGENCY LIGHT SHALL BE SOFFIT MOUNTED.
18.	EMERGENCY FIXTURES SHALL HAVE EMERGENCY BATTERY PACK/BALLAST TO POWER ONE LAMP FOR 90 MINUTES. EXTEND ADDITIONAL HOT CONDUCTOR TO EMERGENCY BALLAST, BALLAST SHALL BE UNSWITCHED. CONNECT TO CIRCUIT L-15.
19.	PROVIDE JUNCTION BOX FOR LIGHTED SHELF. COORDINATE EXACT LOCATION PRIOR TO ROUGH-IN.

ENGINEER:

BRIAN E. CHANDLER, PE

6201 CAMPUS CIRCLE DRIVE E.
IRVING, TEXAS 75038
TEL: 972.870.1288
WWW.IDSTUDIO4.COM
E-MAIL: bchandler@idstudio4.com

CORPORATE:
BRINKER RESTAURANT CORPORATION,
A VIRGINIA CORPORATION
3000 OLYMPUS BLVD.
DALLAS, TEXAS 75019
972.980.9917
www.brinker.com

09/23/2024
ISSUE FOR BID
THESE DOCUMENTS ARE FOR BIDDING PURPOSES ONLY. DO NOT USE FOR CONSTRUCTION.

RESTAURANT #CH1679
PROTOTYPE 18.5FS

CHILI'S TOOELE
951 N MAIN STREET
TOOELE, UT 84074

CLIENT: BRINKER RESTAURANT CORP.
A VIRGINIA CORPORATION

DATE	DESCRIPTION
6/27/2024	ISSUE FOR PERMIT
9/23/2024	ISSUE FOR BID

	DATE	DESCRIPTION
3	09.10.2024	CITY COMMENTS

PROJECT NUMBER:
CHI24007

SHEET TITLE:
ELECTRICAL LIGHTING PLAN

SHEET NUMBER:
E101

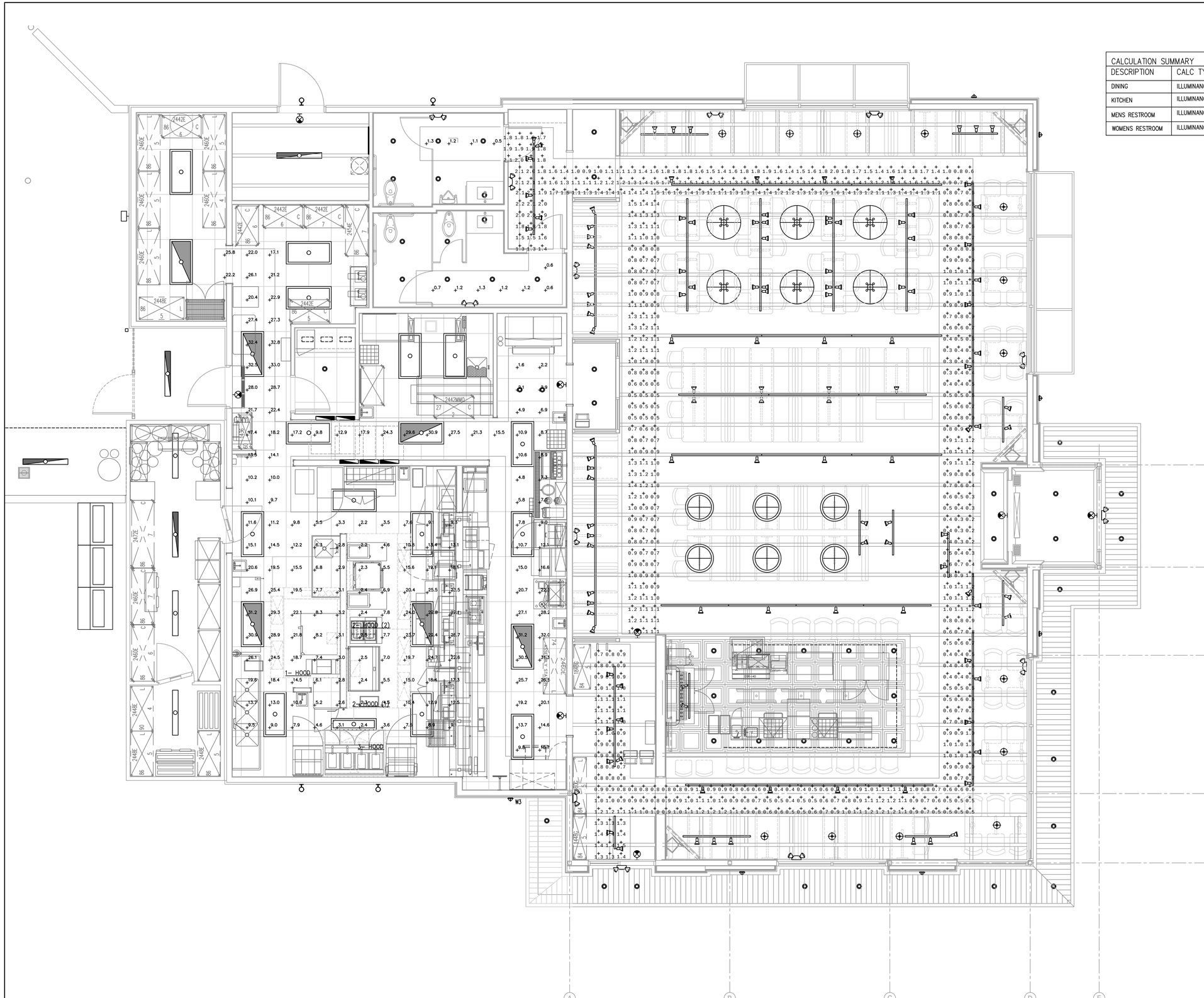

CALCULATION SUMMARY							
DESCRIPTION	CALC TYPE	UNITS	AVG	MAX	MIN	AVG/MIN	MAX/MIN
DINING	ILLUMINANCE	FC	1.01	2.2	0.2	5.05	11.00
KITCHEN	ILLUMINANCE	FC	14.8	33.0	1.6	20.6	9.3
MENS RESTROOM	ILLUMINANCE	FC	1.0	1.3	0.5	2.6	2.0
WOMENS RESTROOM	ILLUMINANCE	FC	1.0	1.3	0.6	2.2	2.0

ELECTRICAL PHOTOMETRICS PLAN
1/4"=1'-0"

1

ENGINEER:

BRIAN E. CHANDLER, PE

6201 CAMPUS CIRCLE DRIVE E.
IRVING, TEXAS 75038
TEL: 972.870.1288
WWW.IDSTUDIO4.COM
E-MAIL: bchandler@idstudio4.com

CORPORATE:
BRINKER RESTAURANT CORPORATION,
A VIRGINIA CORPORATION
3000 OLYMPUS BLVD.
DALLAS, TEXAS 75019
972.980.9917
www.brinker.com

09/23/2024
ISSUE FOR BID
THESE DOCUMENTS ARE FOR BIDDING PURPOSES ONLY. DO NOT USE FOR CONSTRUCTION.

RESTAURANT #CH1679
PROTOTYPE 18.5FS

CHILI'S TOOELE
951 N MAIN STREET
TOOELE, UT 84074

CLIENT: BRINKER RESTAURANT CORP.
A VIRGINIA CORPORATION

DATE	DESCRIPTION
6/27/2024	ISSUE FOR PERMIT
9/23/2024	ISSUE FOR BID

△	DATE	DESCRIPTION
3	09.10.2024	CITY COMMENTS

PROJECT NUMBER:
CHI24007

SHEET TITLE:
ELECTRICAL PHOTOMETRICS PLAN

SHEET NUMBER:
E101A
3

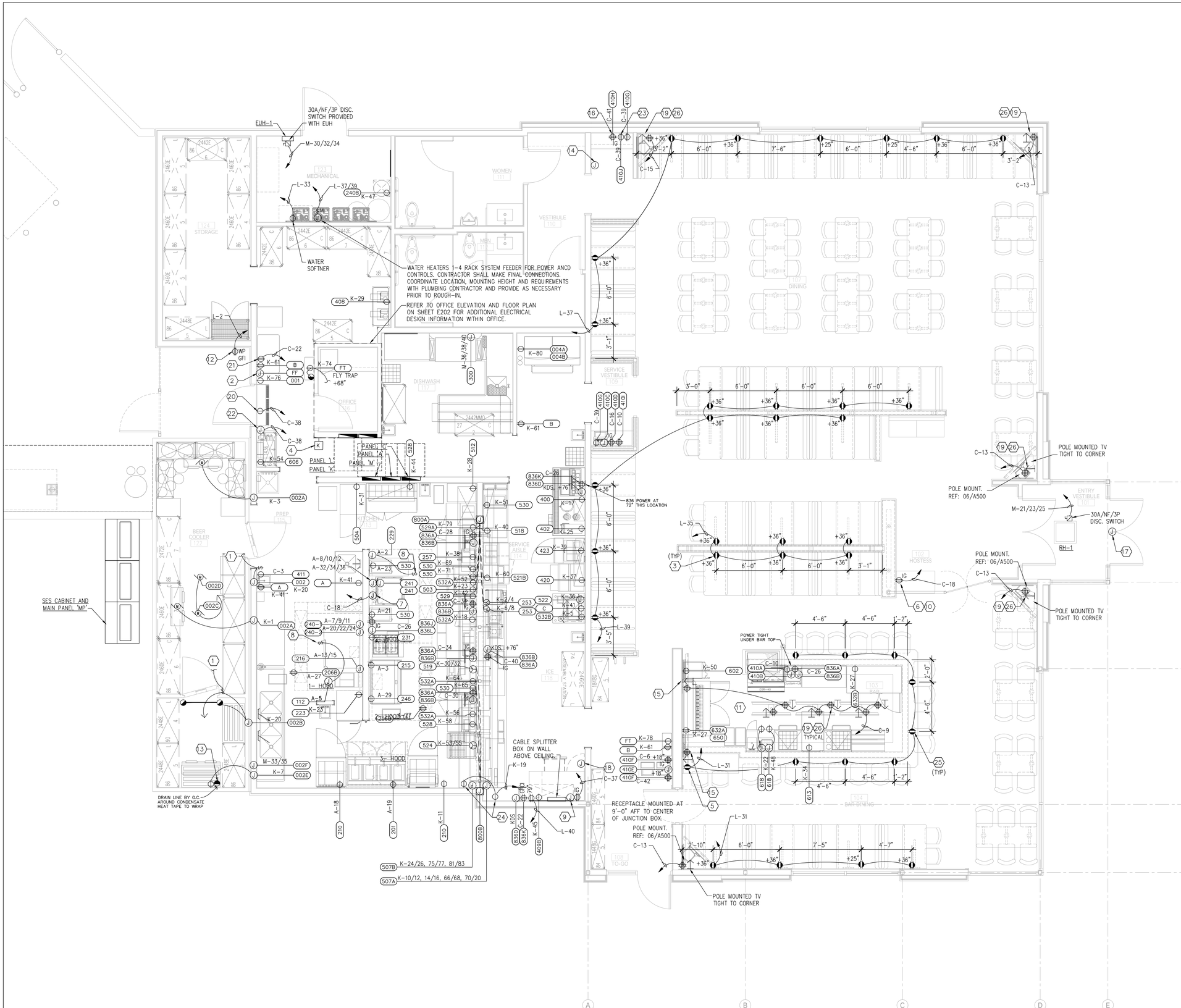

ELECTRICAL POWER PLAN
1/4"=1'-0"

1

GENERAL NOTES

A.	VERIFY LOCATION OF ALL EQUIP. WITH ARCHITECT AND OTHER TRADES.
B.	CONTR IS RESPONSIBLE FOR FIELD VERIFICATION OF ALL CONDITIONS AND IS RESPONSIBLE FOR REPORTING ANY CONFLICTS TO THE ENGINEER PRIOR TO THE START OF WORK.
C.	IN KITCHEN AND BAR AREAS ALL COVER PLATES SHALL BE STAINLESS STEEL.
D.	ALL 125V, 15/20 AMP RECEPT.S WITHIN 6FT OF A SINK SHALL BE G.F.C.I. TYPE, FOR ALL 125V, 15/20 AMP RECEPT.S IN THE KITCHEN AND THE BAR, A GFCI BREAKER SHALL BE PROVIDED PER NEC ARTICLE 210.8 (B). REFER TO SPECS 16143 FOR ADDITIONAL INFORMATION.
E.	REFER TO EQUIPMENT CATALOG SHEETS FOR EXACT REQUIREMENTS.
F.	SEAL ALL CONDUITS ENTERING COOLERS AND FREEZERS AS PER NEC ARTICLE 300.7 WITH APPROVED METHOD AND APPROVED MATERIALS.
G.	REF: KITCH. DWG.S FOR ADDITIONAL ELECTRICAL SYMBOLS, ELEVATIONS, KITCHEN ELECTRICAL ROUGH-IN SCHEDULE, AND NEMA SIZES. COORDINATE WITH KITCHEN VENDOR FOR ALL INSTALLATION REQUIREMENTS.
H.	DUPLEX RECEPT.S SHALL BE MOUNTED AT 18" AFF U.N.O. ON DWG.S OR SCHED.
I.	WHERE DEVICES ARE SHOWN ON HALF WALLS ROUTE CONDUIT DOWN UNDER FLOOR OVER TO NEAREST FULL HGT WALL AND RUN UP INTO CLG STRUCT.
J.	FOR EACH EQUIPMENT ITEM NOT PROVIDED WITH CORD AND PLUG CONNECTION, THE CONTRACTOR SHALL VERIFY THE EQUIPMENT CONTAINS AN INTEGRAL UNIT SWITCH COMPLYING WITH NEC ARTICLE 422.35. IF THE EQUIPMENT HAS NO UNIT SWITCH, PROVIDE A LOCK-OFF DEVICE AT EACH BRANCH CIRCUIT BREAKER FEEDING THE EQUIPMENT.
K.	ALL CIRCUITS SERVED FROM PANEL "C" SHALL BE RUN IN SEPARATE CONDUITS WITH INDEPENDENT GROUND, ISOLATED GROUND, AND NEUT. WIRES.
L.	PERMANENTLY CONN. APPLIANCES RATED OVER 300VA OR 1/9 HP SHALL HAVE A DISC. MEANS WITHIN SIGHT OR BE CAPABLE OF BEING LOCKED IN THE OPEN POSITION PER NEC ARTICLES 422.30 & 422.31(B). PROVIDE NEC. REQ. DISC.
M.	BRANCH CIRCUITS SHALL BE #10 AWG WHERE THE FIRST OUTLET DISTANCE EXCEEDS 75 FT FOR 120V, OR 150 FT FOR 277V CIRCUITS.
N.	REF: 'T101' FOR LOCATION OF SPRINKLER SYSTEM, AND SECURITY DEVICES.
O.	REFER TO SHEET 'E103' FOR LOCATION OF ALL VOICE/DATA/POS DEVICES.
P.	ALL HEATING EQUIPMENT SHALL BE PROVIDED WITH LOCKABLE DISCONNECT SWITCHES WITHIN SIGHT OF EQUIP OR PROVIDED WITH LOCK-OPEN OCT BRKR.
Q.	ALL EXPOSED WIRE SHALL HAVE BLACK INSULATION. UNLESS OTHERWISE NOTED.
R.	ALL EMPTY CONDUITS FOR SECURITY, A/V, DATA VOICE, SPRINKLER MONITOR SYSTEM ETC. SHALL HAVE BUSHINGS AND PULL STRINGS.
S.	PROVIDE ALL TV OUTLET BOXES IN DINING AREA WITH 3/4"C. BACK TO A/V SYS. ABOVE CEILING IN TO-GO AREA. FOR ALL OTHER LOCATIONS, TV OUTLET BOXES SHALL BE ROUTED WITH COAX CABLE (WITHOUT CONDUIT) BACK TO A/V SYSTEM.
T.	KITCHEN SIMPLEX RECEPTACLES SHALL BE AS FOLLOWS; 15 AMP RECEPT. SHALL BE LEVITON T5015-W. 20 AMP RECEPT. SHALL BE LEVITON T5020-W.
U.	ALL RECEPTACLES LOCATED IN THE KITCHEN AND BELOW 42"AFF SHALL BE PROVIDED WITH AN IN-USE EXTRA DUTY COVER BY INTERMATIC #WP5000, SINGLE AND DUPLEX COVERS. COORDINATE REQUIRMENTS PRIOR TO ORDERING.
V.	PROVIDE P-TOUCH STYLE LABEL ON ALL RECEPT.S FACE PLATES IN KITCHEN, STORAGE, DISH, SECURITY AND BAR AREAS TO INDICATE PANEL AND CCT. NO.

KEYED NOTES

#	
1.	COORDINATE WITH EQUIPMENT SUPPLIER FOR ALL DOOR SWITCH/LIGHTING CONN. REQ.'S. REF: 'E101' FOR POWER TO LIGHTING/DOOR SWITCH CIRCUIT.
2.	PROVIDE BACKBOX AND 3/4" EMPTY E.M.T. CONDUIT TO ABOVE CEILING LINE FOR CONNECTION TO HOOD ANSUL SYSTEM. COORDINATE WITH EQUIPMENT VENDOR FOR EXACT CONNECTION REQUIREMENTS.
3.	PROVIDE LEVITON T5833 TYPE A/TYPE C USB CHARGER WITH BLACK FINISH. MOUNT USB CHARGER HORIZONTALLY 6" OFF CENTER OF TABLE TOPS AND 4" ABOVE TABLE TOPS LOCATED WITHIN DINING AREAS AND VISIBLE TO CUSTOMERS.
4.	PROVIDE TWO (2) SINGLE J-BOXES, (1) RIGHT ABOVE THE OTHER W/BOTTOM J-BOX MOUNTED AT 44"AFF FOR ELECTRIC STRIKE AT THE SECURITY CAGE DOOR #18. TOP J-BOX TO CONTAIN THE MOMENTARY PUSH BUTTON (MUSHROOM) AND BOTTOM J-BOX TO CONTAIN THE KEY SWITCH FOR ARMING AND DISARMING THE ELECTRIC STRIKE SYSTEM. SEE HARDWARE SCHEDULE ON A601, DOOR ELEVATION 18 SPECIFICATIONS FOR MUSHROOM BUTTON, KEY SWITCH AND OTHER COMP. ASSOCIATED WITH THE ELECTRIC STRIKE SYSTEM.
5.	PROVIDE LEVITON T5833 TYPE A/TYPE C USB CHARGER WITH BLACK FINISH. AT ACCESSIBLE BAR, MOUNT USB CHARGER HORIZONTALLY, 38" A.F.F. REF: ARCH. ELEVATIONS FOR MORE INFORMATION.
6.	PROVIDE HORIZONTALLY MOUNTED DUPLEX RECEPTACLE FOR HOSTESS STAND. MOUNT AT 2'-8" A.F.F. RUN CONDUITS UNDERGROUND.
7.	JBOX FOR TEMPERATURE SENSOR. VERIFY EXACT LOCATION WITH HOOD MANUF
8.	SWITCH PANEL FOR CONTROL OF LIGHT FIXTURE AND FAN FOR HOOD. PROVIDE PRE-WIRED SWITCHES AND ALL REQUIRED CONNECTIONS TO HOOD CONTROL PANEL.
9.	PROVIDE DUPLEX RECEPTACLE 6" ABOVE FINISHED CEILING FOR 6"X6"X4" SPLITTER BOX AND RECEIVER ABOVE ACCESSIBLE CEILING. PROVIDE COAX CABLE CONNECTIONS THRU 'ATR HUB' TO SATELLITE DISH ON ROOFTOP. RUN COAX CABLE TO TV RECEIVERS FROM SPLITTER BOX.
10.	CONTRACTOR TO INSTALL AN OWNER FURNISHED 'TRIPP LITE' #PS-410-HG-OEMCC POWER STRIP WITHIN HOSTESS STAND FOR POWER TO IPAD. PLUG POWER STRIP INTO HOST STAND DUPLEX RECEPTACLE INDICATED WITH KEYED NOTE 6.
11.	REFER TO KITCHEN DRAWINGS FOR ALL BACK OF BAR ELEVATIONS TO LOCATE ELECTRICAL DEVICES.
12.	WEATHERPROOF RECEPTACLE @ 6'-0" AFF FOR LAWN SPRINKLER SYSTEM.
13.	HEAT TAPE TO WRAP AROUND CONDENSATE LINE.
14.	CONTRACTOR SHALL REQUEST AND OBTAIN 8-GANG PRO WIRE HI LOB J-BOX FROM 'PLAY NETWORK' TO BE USED FOR MUSIC CONTROLS. PROVIDE (3)-3/4" CONDUIT TO ABOVE CEILING. REFER TO ENLARGED OFFICE PLAN ON 'E202' FOR MUSIC SYSTEM. PROVIDE HI LO BOX AT 4'-6".
15.	QUAD RECEPTACLE AND TV TWO GANG OUTLET SHALL BE LOCATED BEHIND TV TO SERVE THIS TV. REFER TO 1/A500. MOUNT AT 7'-3"AFF.
16.	I.G. QUAD RECEPTACLE FOR RADIO BATTERY CHARGERS. MOUNT AT 2'-4" AFF.
17.	J-BOX FOR EXTERIOR SPEAKER OVER ENTRY DOOR(S) MOUNTED ON UNDERSIDE OF SOFFIT. J-BOX TO BE INSTALLED HORIZONTALLY WITH A BLACK COVER PLATE AND SHALL SUPPORT A MINIMUM OF 10LBS.
18.	JUNCTION BOX FOR VOLUME CONTROL.
19.	PROVIDE (1) 3-GANG STANDARD OUTLET WITH DIVIDER, WITH NEMA 5-20R QUAD RECEPT. AND AUDIO/VISUAL CONNECTORS AS REQUIRED. COORD. WITH 'PLAY NETWORK' FOR CONDUIT REQUIREMENTS. MOUNT AT 8'-0" AFF.
20.	SIMPLEX RECEPTACLE FOR DTEX ALARM. MOUNT ABOVE DOOR. REFER 3/T101.
21.	I.G. RECEPTACLE FOR SECURITY MONITOR. MOUNT AT 8'-0" RIGHT BELOW THE CEILING. PROVIDE A J-BOX AT 8'-0" NEXT TO THE RECEPT. WITH 3/4"C. STUBBED UP INTO CEILING FOR SECURITY MONITOR VIDEO CABLE. CONTRACTOR SHALL PROVIDE WHITE COVER PLATE WITH CENTER HOLE.
22.	4"X4" J-BOX FOR DTEX ALARM. MOUNT AT 5'-0" AFF. REFER TO 3/T101.
23.	I.G. SIMPLEX RECEPTACLE FOR TABLET CHARGING. MOUNT AT 19" AFF.
24.	PROVIDE SIMPLEX CLOCK HANGER MOUNTED 88"AFF. PROVIDE A LEVITON 688-W, WHITE COLOR.
25.	PROVIDE LEVITON T5833 TYPE A/TYPE C USB CHARGER WITH BLACK FINISH. MOUNT USB CHARGER HORIZONTALLY, 6" BELOW BAR TOP. REF: ARCH. ELEV. FOR MORE INFO.
26.	FOR POLE MOUNTED TV, G.C. TO INSTALL OWNER FURNISHED POLE AND BRACKET. ELECT. CONTRACTOR TO INSTALL CONDUIT, WIRE, JUNCTION BOXES, (1) TWO-GANG STANDARD OUTLET, WITH NEMA 5-20R DUPLEX RECEPT AND AUDIO/VISUAL CONNECTORS AS REQUIRED AT BOTTOM CHORD OF WOOD TRUSS FOR POWER AND COAX CABLE TO FEED TV.

ENGINEER:

BRIAN E. CHANDLER, PE

6201 CAMPUS CIRCLE DRIVE E.
IRVING, TEXAS 75038
TEL: 972.870.1288
WWW.IDSTUDIO4.COM
E-MAIL: bchandler@idstudio4.com

CORPORATE
BRINKER RESTAURANT CORPORATION, A VIRGINIA CORPORATION
3000 OLYMPUS BLVD.
DALLAS, TEXAS 75019
972.980.9917
www.brinker.com

09/23/2024
ISSUE FOR BID
THESE DOCUMENTS ARE FOR BIDDING PURPOSES ONLY. DO NOT USE FOR CONSTRUCTION.

RESTAURANT #CH1679
PROTOTYPE 18.5FS

CHILI'S TOOELE
951 N MAIN STREET
TOOELE, UT 84074

CLIENT: BRINKER RESTAURANT CORP. A VIRGINIA CORPORATION

DATE	DESCRIPTION
6/27/2024	ISSUE FOR PERMIT
9/23/2024	ISSUE FOR BID

△	DATE	DESCRIPTION

PROJECT NUMBER:
CHI24007

SHEET TITLE:
ELECTRICAL POWER PLAN

SHEET NUMBER:
E102

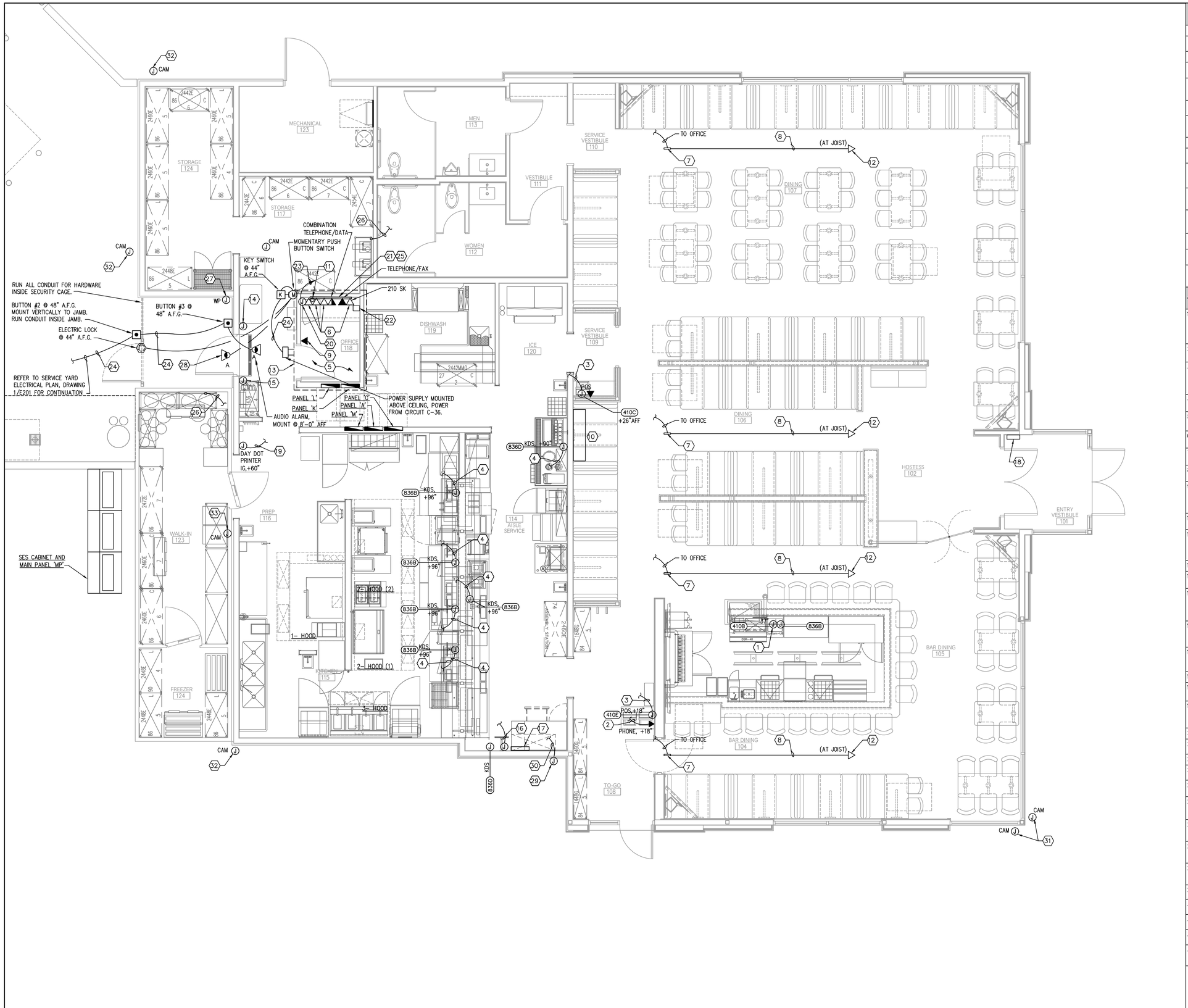

ELECTRICAL SPECIAL SYSTEMS PLAN
1/4"=1'-0"

1

GENERAL NOTES

A.	REFER TO FS SHEETS FOR ADDITIONAL LOCATION INFORMATION.
B.	ALL CONDUIT ON THIS SHEET FURNISHED AND INSTALLED BY ELECTRICAL CONTRACTOR.
C.	VERIFY AND FIELD COORDINATE ALL EQUIPMENT ROUGH-IN REQUIREMENTS.
D.	CAT 5e CABLE (GRAY) FOR VOICE/DATA/POS CABLE PROVIDED BY I.T. VENDOR.
E.	ROUTE ALL EXPOSED CONDUIT PARALLEL AND PERPENDICULAR TO TRUSSES BETWEEN BOTTOM OF TOP CHORD AND TOP OF BOTTOM CHORD AS REQUIRED. PAINT AS DIRECTED.
F.	ELECTRICAL CONTRACTOR TO VERIFY LOCATION OF ALL EQUIPMENT WITH ARCHITECT AND OTHER TRADES.
G.	CONTRACTOR IS RESPONSIBLE FOR FIELD VERIFICATION OF ALL CONDITIONS AND IS ALSO RESPONSIBLE FOR REPORTING ANY CONFLICTS TO THE ENGINEER PRIOR TO THE START OF WORK.
H.	SEE SHEET E202 FOR ELECTRICAL SYMBOLS LEGEND.
I.	ALL EXPOSED WIRE SHALL HAVE BLACK INSULATION. UNLESS OTHERWISE INDICATED.
J.	PROVIDE OUTLET BOX WITH DEDICATED 3/4" CONDUIT WITH PULL WIRE STUBBED UP INTO CEILING STRUCTURE FOR COMMUNICATION DEVICES (TELEPHONE, AND DATA).
K.	WHERE DEVICES ARE SHOWN ON HALF WALLS ROUTE CONDUIT DOWN UNDER FLOOR OVER TO FULL HEIGHT WALL AND STUBBED UP INTO CEILING STRUCTURE.
L.	ALL COMMUNICATION OUTLETS SHALL BE MOUNTED PER KITCHEN ELECTRICAL ROUGH-IN SCHEDULE ON SHEET K301. IF NOT LISTED IN SCHEDULE OR NOTED OTHERWISE, THEN MOUNT AT 18"A.F.F.
M.	ALL EMPTY CONDUITS FOR, DATA/VOICE, ETC. SHALL HAVE BUSHINGS AND PULL STRINGS.
N.	ALL POS PHONE/DATA SHALL BE ROUTED TO OFFICE UNLESS NOTES OTHERWISE.

KEYED NOTES

#	
1.	JUNCTION BOX @ 37"AFF TO CENTERLINE OF OUTLET WITH 3/4" UNDERGROUND CONDUIT WITH PULL WIRE FOR POS (POINT OF SALES) SYSTEMS CABLE TO POS J-BOX(ES) IN OFFICE. REFER TO KEY NOTE #10 FOR ADDITIONAL INFORMATION.
2.	WALL MOUNTED TELEPHONE OUTLET WITH 3/4" CONDUIT WITH PULL WIRE TO PHONE SYSTEM IN OFFICE.
3.	JUNCTION BOX @ 24"AFF TO CENTERLINE OF OUTLET WITH 3/4" CONDUIT WITH PULL WIRE FOR POS (POINT OF SALES) SYSTEMS CABLE TO POS J-BOX(ES) IN OFFICE. PROVIDE MOST DIRECT ROUTE ABOVE CEILING TO POS SYSTEM IN OFFICE.
4.	OUTLETS MOUNTED AT HEIGHTS AS INDICATED WITH J-BOX AND 3/4" CONDUIT AND PULL WIRE FOR KDS CABLE TO ABOVE CEILING.
5.	TELEPHONE OUTLET WITH 3/4" E.C. AND PULL-WIRE ROUTED TO PHONE SYSTEM IN THIS ROOM. (TYPICAL)
6.	REFER TO E202 FOR DATA, PHONE AND ELECTRICAL OUTLET MOUNTING REQUIREMENTS, THIS AREA.
7.	3/4" CONDUIT SLEEVE (BY ELECTRICIAN) FOR DATA CABLE. LOCATE ADJACENT TO BOTTOM CHORD OF JOIST.
8.	DATA CABLE FURNISHED BY OWNER, INSTALLED BY ELECTRICIAN. ROUTE ABOVE JOISTS.
9.	THE OWNER WILL PROVIDE (2) TAGGED PHONE LINES AND (2) RJ31X PHONE JACKS AT THE SMCP LOCATION. THE (2) RJ31X PHONE JACKS SHOULD BE MOUNTED ABOVE CEILING PRIOR TO THE INSTALLATION OF THE SPRINKLER MONITORING CONTROL PANEL.
10.	WALL AREA DESIGNATED FOR ALL UNDERGROUND CONDUITS TO TRANSITION TO ABOVE CEILING FOR POS AND PHONE.
11.	2" CONDUIT WITH PULL WIRE FOR PHONE SYSTEM TO D-MARK AT STORAGE SHED. ROUTE ABOVE THE CEILING AND TURN DOWN RIGHT ABOVE THE NETWORK CABINET. SEE ELEVATION C ON SHEET E202 FOR NETWORK CABINET LOCATION.
12.	WIRELESS ACCESS POINT.
13.	REFER TO OFFICE ELEVATION AND FLOOR PLAN, ON SHEET E202 FOR ADDITIONAL ELECTRICAL DESIGN INFORMATION WITHIN OFFICE.
14.	JUNCTION BOX @ 8'-0" AFF TO CENTERLINE OF OUTLET WITH 3/4" CONDUIT WITH PULL WIRE FOR SECURITY MONITOR CABLE TO SECURITY SYSTEM J-BOX(ES) IN OFFICE. PROVIDE ABOVE CEILING TO SECURITY SYSTEM PANEL IN OFFICE.
15.	2-GANG JUNCTION BOX @ 5'-0"AFF TO CENTERLINE OF OUTLET WITH 3/4" CONDUIT WITH PULL WIRE FOR DTEX ALARM CABLE TO SECURITY SYSTEM J-BOX(ES) IN OFFICE.
16.	JUNCTION BOX @ 8'-0" AFF TO CENTERLINE OF OUTLET WITH 3/4" CONDUIT WITH PULL WIRE ABOVE CEILING FOR CABLE TO ROOF MOUNTED SATELLITE DISH.
17.	CABLE SPLITTER BOX. MOUNT ON WALL AT 8'-0" TO CENTER OF BOX.
18.	FIRE SPRINKLER SYSTEM ANNUNCIATOR PANEL WITH DOUBLE GANG JUNCTION BOX WITH 3/4" CONDUIT TO ABOVE CEILING.
19.	JUNCTION BOX WITH 3/4" UNDERGROUND CONDUIT WITH PULL WIRE FOR DAY DOT PRINTER SYSTEMS CABLE TO J-BOX(ES) IN OFFICE. REFER TO KEY NOTE #10 FOR ADDITIONAL INFORMATION.
20.	WAN SYSTEM @ 5'-0" AFF, GFI-WP. CONNECT TO CIRCUIT 'C-4'.
21.	PROVIDE #6 COPPER GROUND FROM TELEPHONE DEMARCATION POINT BACK TO THE MAIN PANELBOARD GROUND BUSS.
22.	'D' MARK FOR PHONE CO. ABOVE CEILING.
23.	2" TELEPHONE CONDUIT UNDERGROUND FROM D-MARK TO ABOVE CEILING HEIGHT IN THE BACK WALL OF THE OFFICE.
24.	24 VDC, #18 GA. CONTROL WIRE IN 1/2" CONDUIT. ROUTE UNDERGROUND TO MAIN GATE.
25.	2'W x 2'H x 3/4"D, 'AB' GRADE PLYWOOD TELEPHONE TERMINAL BACKBOARD. MOUNTED ABOVE OFFICE CEILING WITH QUAD I.G. RECEPTACLE FOR TELEPHONE EQUIPMENT.
26.	2" PVC UNDERGROUND CONDUIT FOR CO2 LINE STUBBED UP IN SERVICE YARD. ROUTE UNDERGROUND FROM SERVICE YARD TO ABOVE CEILING WITHIN BEER COOLER AND BAG-N-BOX. REFER TO KITCHEN DRAWINGS.
27.	WEATHERPROOF JUNCTION BOX @ 6'-0" AFF FOR IRRIGATION CONTROLLER CONTROL WIRING. ROUTE CONDUIT FROM BELOW GRADE THEN TO LAWN. VERIFY LOCATION OF CONTROLLER PRIOR TO ROUGH-IN.
28.	MOUNT BELL OVER BACK DOOR ON THE OUTSIDE. TIE TO THE ELECTRIC STRIKE AND SHALL BE CONTROLLED BY INTERIOR BUTTON "M" TO RELEASE DOOR STRIKE. THE BELL CHIMES AS LONG AS THE BUTTON IS DEPRESSED.
29	WEATHERPROOF QUAD BOX EQUIVALENT TO HUBBELL TYMAC SERIES MOUNTED 10 INCHES ABOVE CANOPY FOR EXTERIOR WFI ACCESS.
30	1/2" CONDUIT WITH PULL STRING TO ABOVE BACK OF HOUSE CEILING FOR EXTERIOR WIFI ACCESS.
31	PROVIDE JUNCTION BOX FOR SINGLE FLUSH MOUNT GANG BOX ON UNDERSIDE OF SOFFIT FOR CAMERA WITH PULL STRING TO ACCESSIBLE CEILING.
32	PROVIDE JUNCTION BOX FOR SINGLE FLUSH MOUNT GANG BOX FOR CAMERA WITH PULL STRING TO ACCESSIBLE CEILING.
33	PROVIDE JUNCTION BOX FOR SINGLE FLUSH MOUNT GANG BOX WITH CONDUIT RUNNING ALONG BACKSIDE OF PARAPET THROUGH ROOF FOR CAMERA WITH PULL STRING TO ACCESSIBLE CEILING.

ENGINEER:

BRIAN E. CHANDLER, PE

6201 CAMPUS CIRCLE DRIVE E.
IRVING, TEXAS 75038
TEL: 972.870.1288
WWW.IDSTUDIO4.COM
E-MAIL: bchandler@idstudio4.com

CORPORATE:
BRINKER RESTAURANT CORPORATION,
A VIRGINIA CORPORATION
3000 OLYMPUS BLVD.
DALLAS, TEXAS 75019
972.980.9917
www.brinker.com

09/23/2024
ISSUE FOR BID
THESE DOCUMENTS ARE FOR BIDDING PURPOSES ONLY. DO NOT USE FOR CONSTRUCTION.

RESTAURANT #CH1679
PROTOTYPE 18.5FS

CHILI'S TOOELE
951 N MAIN STREET
TOOELE, UT 84074

CLIENT: BRINKER RESTAURANT CORP.
A VIRGINIA CORPORATION

DATE	DESCRIPTION
6/27/2024	ISSUE FOR PERMIT
9/23/2024	ISSUE FOR BID

⚠	DATE	DESCRIPTION

PROJECT NUMBER:
CHI24007

SHEET TITLE:
ELECTRICAL SPECIAL SYSTEMS PLAN

SHEET NUMBER:
E103

NOTE:
COORDINATE ALL SERVICE ENTRANCE REQUIREMENTS WITH ELECTRIC UTILITY PROVIDER AND CIVIL PRIOR TO COMMENCING CONSTRUCTION. ALL SERVICE ENTRANCE EQUIPMENT SHALL BE LISTED AND BEAR THE MANUFACTURER MARKING TO IDENTIFY THAT THE EQUIPMENT IS "SUITABLE FOR USE AS SERVICE EQUIPMENT". PROVIDE WITH LABEL, "SERVICE ENTRANCE DISCONNECT".

ELECTRICAL CONTRACTOR NOTE ON SWITCHGEAR:
CLEARANCE FROM WALLS (ON BOARDS THAT ARE NOT REAR ACCESSIBLE) SHOULD BE A MINIMUM OF 1/2 INCH FOR INDOOR BOARDS, FOR BOARDS USED IN OUTDOOR OR WET LOCATIONS THE CLEARANCE SHOULD BE NO LESS THAN 6 INCHES.

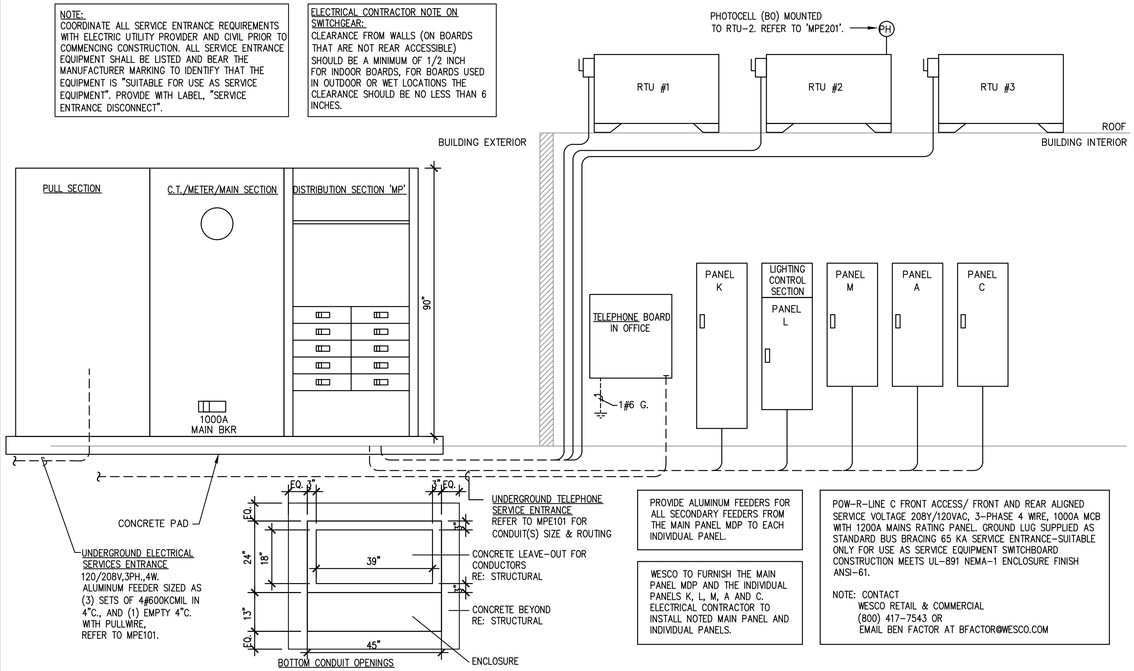

PROVIDE ALUMINUM FEEDERS FOR ALL SECONDARY FEEDERS FROM THE MAIN PANEL MDP TO EACH INDIVIDUAL PANEL.

WESCO TO FURNISH THE MAIN PANEL MDP AND THE INDIVIDUAL PANELS K, L, M, A AND C. ELECTRICAL CONTRACTOR TO INSTALL NOTED MAIN PANEL AND INDIVIDUAL PANELS.

POW-R-LINE C FRONT ACCESS/ FRONT AND REAR ALIGNED SERVICE VOLTAGE 208Y/120VAC, 3-PHASE 4 WIRE, 1000A MCB WITH 1200A MAINS RATING PANEL. GROUND LUG SUPPLIED AS STANDARD BUS BRACING 65 KA SERVICE ENTRANCE-SUITABLE ONLY FOR USE AS SERVICE EQUIPMENT SWITCHBOARD CONSTRUCTION MEETS UL-891 NEMA-1 ENCLOSURE FINISH ANSI-61.

NOTE: CONTACT
WESCO RETAIL & COMMERCIAL
(800) 417-7543 OR
EMAIL BEN FACTOR AT BFACTOR@WESCO.COM

ELECTRICAL RISER DIAGRAM 1
SCALE: NONE

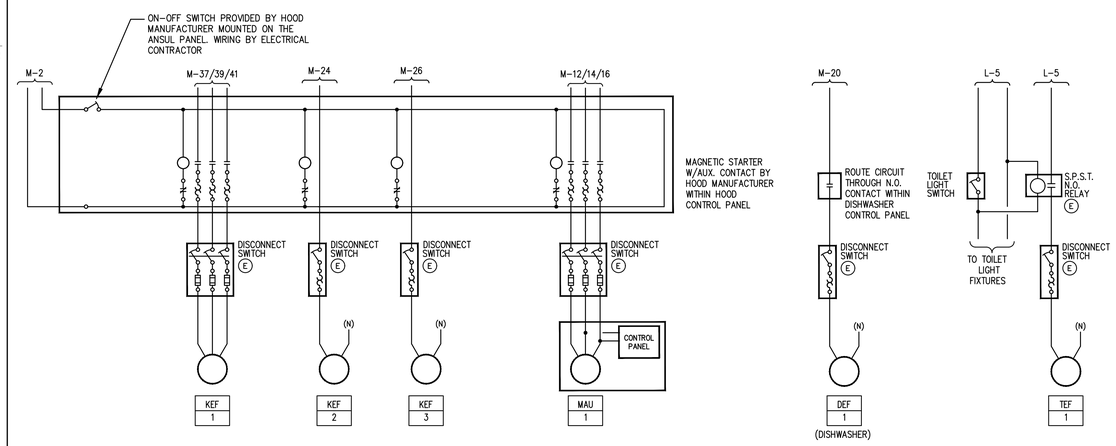

NOTE:
ELECTRICAL CONTRACTOR TO ELECTRICALLY INTERLOCK KEF-1, 2, 3 AND MAU-1 FAN. ALL WIRING BY ELECTRICAL CONTRACTOR.

(E) INDICATES PROVIDED AND INSTALLED BY ELECTRICAL CONTRACTOR

EXHAUST & MAKE-UP AIR INTERLOCK WIRING DIAGRAM 2
SCALE: NONE

FIRE ALARM SCHEMATIC GENERAL NOTES

A.	HVAC DUCT MOUNTED SMOKE DETECTORS SHALL BE PROVIDED BY OTHERS.
B.	FIRE ALARM CONTRACTOR SHALL BE CURRENTLY LICENSED WITH THE STATE AND SUBMIT A COMPLETE FIRE ALARM SUBMITTAL (PLANS, SPECS., CUT SHEETS ETC.) PREPARED BY THE STATE REGISTERED FIRE PROTECTION CONTRACTOR, AND SUBMITTED TO AUTHORITY HAVING JURISDICTION FOR APPROVAL. INFORMATION SHALL NOT BE LIMITED TO THE FOLLOWING. -SEQUENCE OF OPERATION -CATALOG CUT SHEETS -POINT TO POINT DIAGRAM -HORN,STROBE LIGHTS -MANUAL PULL STATION LAYOUT -CANDELA OF STROBES -BATTERY CALCULATIONS INCLUDING TOTAL STANDBY -ALARM CURRENT.
C.	CONTRACTOR SHALL PROVIDE ADDITIONAL FIRE ALARM DEVICES PER AHJ AND INCLUDE ALL EXPENSES IN BID TO COMPLETE AN OPERABLE FIRE ALARM SYSTEM AS REQUIRED BY AUTHORITY HAVING JURISDICTION. REFER TO SPECIFICATIONS FOR ADDITIONAL INFORMATION.
D.	PROVIDE THE NUMBER OF ACTIVE AND SPARE ADDRESSES AS REQUIRED TO THE FIRE ALARM PANEL TO ACCOMMODATE ALL DEVICES
E.	PROVIDE DEDICATED TELEPHONE LINE FOR 24-HOUR MONITORING SYSTEM PER CITY REQUIREMENT.
F.	CONTRACTOR SHALL FURNISH/INSTALL FIRE ALARM DEVICES, SYSTEM COMPONENTS, WIRING/CONDUITS AND CONTROLS AS REQUIRED AND COMPLETE THE FIRE ALARM SYSTEM PER NFPA 72 AND AUTHORITY HAVING JURISDICTION "AHJ". FIRE ALARM DEVICES SHALL BE MONITORED FROM AN APPROVED CENTRAL STATION PER AHJ.
G.	PROVIDE ALL APPURTENANCES AS REQUIRED TO INTERFACE WITH KITCHEN SMOKE SUPPRESSION SYSTEM.

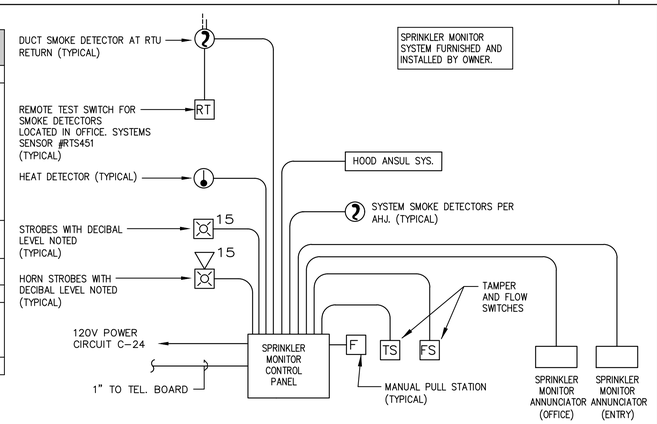

SPRINKLER MONITOR SYSTEM FURNISHED AND INSTALLED BY OWNER.

SPRINKLER MONITOR RISER DIAGRAM 3
SCALE: NONE

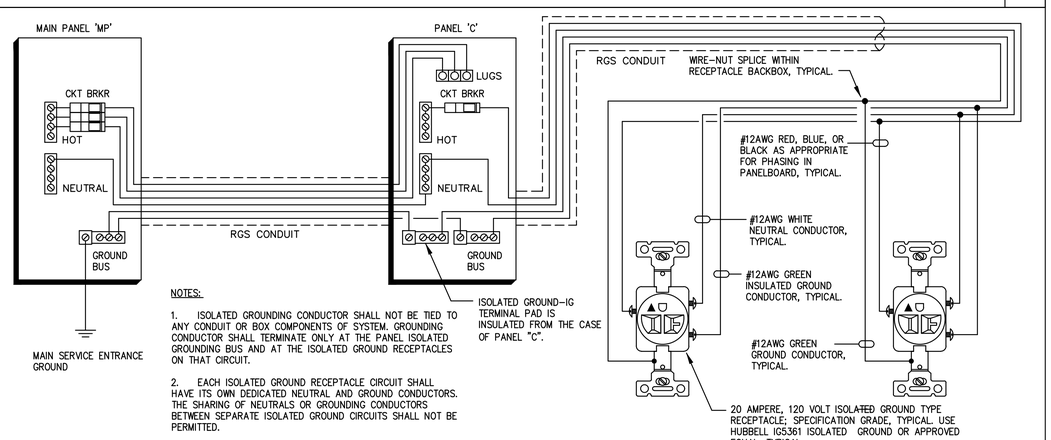

NOTES:

1. ISOLATED GROUNDING CONDUCTOR SHALL NOT BE TIED TO ANY CONDUIT OR BOX COMPONENTS OF SYSTEM. GROUNDING CONDUCTOR SHALL TERMINATE ONLY AT THE PANEL ISOLATED GROUNDING BUS AND AT THE ISOLATED GROUND RECEPTACLES ON THAT CIRCUIT.

2. EACH ISOLATED GROUND RECEPTACLE CIRCUIT SHALL HAVE ITS OWN DEDICATED NEUTRAL AND GROUND CONDUCTORS. THE SHARING OF NEUTRALS OR GROUNDING CONDUCTORS BETWEEN SEPARATE ISOLATED GROUND CIRCUITS SHALL NOT BE PERMITTED.

DEDICATED ISOLATED GROUND SCHEMATIC 4
NOT TO SCALE

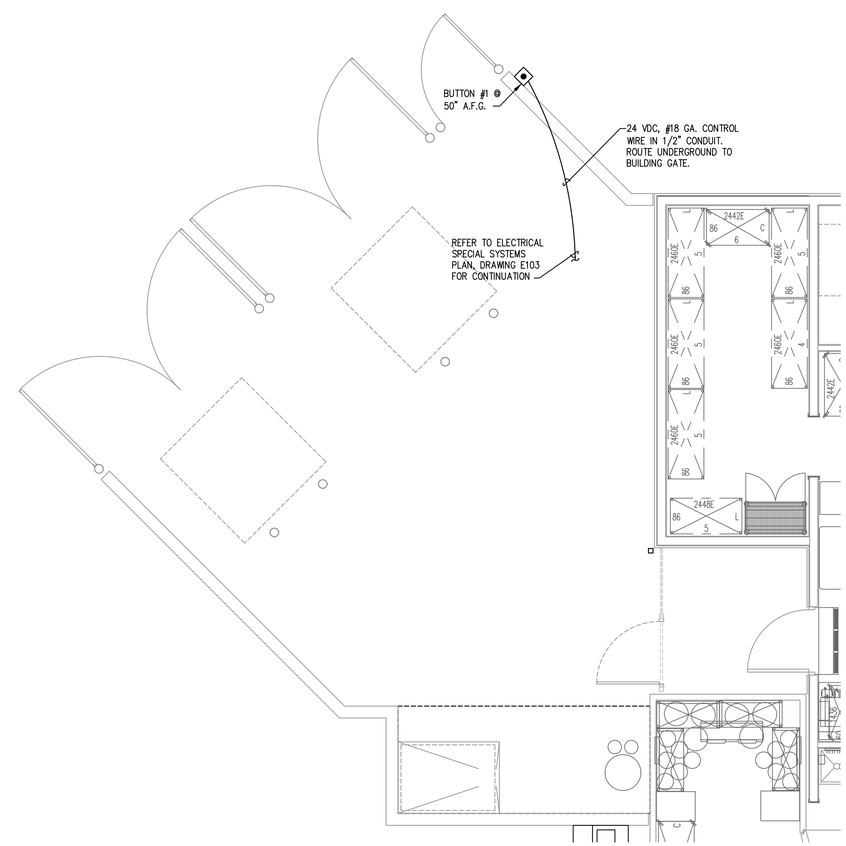

SERVICE YARD - ELECTRICAL 5
1/4"=1'-0"

ENGINEER:
BRIAN E. CHANDLER, PE
6201 CAMPUS CIRCLE DRIVE E.
IRVING, TEXAS 75038
TEL: 972.870.1288
WWW.IDSTUDIO4.COM
E-MAIL: bchandler@idstudio4.com

CORPORATE:
BRINKER RESTAURANT CORPORATION, A VIRGINIA CORPORATION
3000 OLYMPUS BLVD.
DALLAS, TEXAS 75019
972.980.9917
www.brinker.com

09/23/2024
ISSUE FOR BID
THESE DOCUMENTS ARE FOR BIDDING PURPOSES ONLY. DO NOT USE FOR CONSTRUCTION.

RESTAURANT #CH1679
PROTOTYPE 18.5FS

CHILI'S TOOELE
951 N MAIN STREET
TOOELE, UT 84074

CLIENT: BRINKER RESTAURANT CORP. A VIRGINIA CORPORATION

DATE	DESCRIPTION
6/27/2024	ISSUE FOR PERMIT
9/23/2024	ISSUE FOR BID

	DATE	DESCRIPTION

PROJECT NUMBER:
CHI24007

SHEET TITLE:
ELECTRICAL RISER DIAGRAM AND DETAILS

SHEET NUMBER:
E201

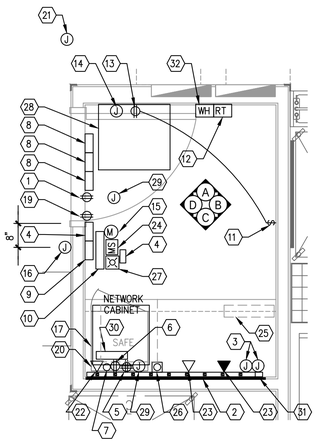

ENLARGED OFFICE POWER FLOOR PLAN 1
SCALE: 1/2" = 1'-0"

KEYED NOTES

1.	ISOLATED GROUND DUPLEX RECEPTACLE FOR SECURITY SYSTEM AND KEY PAD. (CIRCUIT C–20).
2.	CONTINUOUS DOUBLE POWER STRIP @ 3'–3"A.F.F.(TOP OF SPLASH, NO GAP). PROVIDE AL3000 SERIES LEGRAND PLUGMOLD OR APPROVED EQUIVALENT WITH RECEPTACLES 6" O.C. AND ALL NECESSARY COMPONENTS FOR A COMPLETE SYSTEM. CONFIRM SPECIFICATIONS WITH OWNER PRIOR TO ORDER.
3.	JUNCTION BOX FOR POWER STRIP. MOUNT HORIZONTALLY ABOVE BACKSPLASH. (CIRCUITS L–25 AND L–27).
4.	FIRE PANEL POWER SUPPLY.
5.	ISOLATED GROUND QUAD. RECEPTACLE DEDICATED FOR NETWORK CABINET, PHONE SYSTEM AND ZIOSK @ 8'–6" A.F.F. (CIRCUITS C–5 AND C–7).
6.	ISOLATED GROUND DUPLEX RECEPTACLE DEDICATED FOR PRINTER. (CIRCUIT C–11).
7.	4" DIAMETER PVC SLEEVE, 6 INCHES IN LENGTH, WITH END CAPS STUBBED THROUGH THE CEILING TILE RIGHT NEXT TO THE CEILING WALL ANGLE FOR WIRING FROM DMARK, TELEPHONE, WAN BOARD, ETC. TO ABOVE CEILING.
8.	SECURITY COMPONENTS SUPPLIED AND INSTALLED BY BRINKER CONTRACTOR ABOVE CEILING.
9.	SECURITY PANEL MOUNTED ABOVE CEILING. COORDINATE WITH BRINKER VENDOR FOR ADDITIONAL REQUIREMENTS. REFER TO SHEET 'T101' FOR ALL SECURITY DEVICES.
10.	SPRINKLER MONITOR CONTROL PANEL PROVIDED BY BRINKER CONTRACTOR, INSTALLED BY BRINKER CONTRACTOR, MOUNT PANEL SINGLE JUNCTION BOX WITH 3/4" CONDUIT TO ABOVE CEILING.
11.	SWITCH FOR MUSIC SYSTEM @ 5'–0" A.F.F.
12.	3 SINGLE JUNCTION BOXES FOR (3) DUCT DETECTOR RESETS. MOUNT JUNCTION BOXES AT 5'–0"A.F.F. STACKED (1) ON TOP OF EACH OTHER
13.	ISOLATED GROUND DUPLEX RECEPTACLE @ 8'–6" A.F.F. (CIRCUIT C–1). SWITCH, NOTE 11, TO ONLY CONTROL ONE OUTLET, OTHER OUTLET TO BE UNSWITCHED.
14.	JUNCTION BOX ABOVE CEILING. ROUTE (3) THREE 3/4" CONDUITS TO ABOVE CEILING.
15.	JUNCTION BOX @ 48" A.F.F. FOR MUSIC VOLUME. STUB 3/4" CONDUIT TO ABOVE CEILING.
16.	SINGLE JUNCTION BOX ABOVE CEILING W/ 1/2" CONDUIT TO FIRE PANEL.
17.	TELEPHONE SYSTEM WITHIN NETWORK CABINET.
18.	FIRE CONTROL DOC BOX SUPPLIED AND INSTALLED BY BRINKER CONTRACTOR.
19.	ISOLATED GROUND DUPLEX RECEPTACLE DEDICATED FOR SPRINKLER MONITOR CONTROL PANEL AND CELLULAR RADIO MOUNTED ABOVE CEILING. (CIRCUIT C–24).
20.	GROMMETS LOCATED IN REAR CORNER
21.	CEILING MOUNTED ZIOSK COMMUNICATION REPEATER.
22.	1 PORT DATA OUTLET. STUB 3/4" CONDUIT TO ABOVE CEILING. J–BOX TO ALIGN ADJACENT TO ELECTRICAL RECEPTACLE.
23.	1 PORT FAX OUTLET.
24.	OFFICE LIGHTING SENSOR
25.	CASH DRAWER
26.	SECURITY HOLD UP BUTTON BELOW OFFICE DESK. REFER TO SHEET 'T101' FOR ALL SECURITY DEVICES.
27.	SPRINKLER MONITOR STROBE ALARM DEVICE SINGLE BOX W/ 3/4" CONDUIT TO ABOVE CEILING.
28.	MUSIC SYSTEM ABOVE DOOR.
29.	JBOX WITH 2" EMPTY CONDUIT STUBBED INTO ATTIC SPACE FOR VIDEO CABLE. PROVIDE STAINLESS COVER PLATE WITH CENTER HOLE.
30.	TELEPHONE 66 BLOCK ABOVE CEILING.
31.	TELEPHONE BACKBOARD WITH QUAD RECEPTACLE ABOVE CEILING.
32.	WATER HEATER ALARM PROVIDED WITH WATER HEATER SYSTEM TO BE LOCATED IN THE OFFICE.

LIGHTING FIXTURE SCHEDULE

TYPE	SYMBOL	DESCRIPTION	MOUNTING	LAMP	WATTS	VOLTAGE
C		5" RECESSED DOWNLIGHT, IC HOUSING, BLACK BAFFLE, PROVIDE WITH LED LAMP. JUNO LIGHTING (FIXTURE) #SP26627 JUNO LIGHTING (TRIM) #205B–WH	RECESSED	(1) 12W PAR30 ECOSTORY LED	12W	120V/1PH
EM		EXITRONIX "TRITON" SERIES EXTERIOR EMERGENCY UNIT, WET LOCATION LISTED, WITH MINIMUM 90MIN EMERGENCY BATTERY BACKUP. BARRON LIGHTING GROUP #TR–ACER–BL	SURFACE	(2)–6W XENON (INCLUDED)	12W	120V/1PH
D		3.5" MINIATURE LOW VOLTAGE RECESSED DOWNLIGHT, NON–IC HOUSING TO BE USED WITH REMOTE TRANSFORMER. RECESSO LIGHTING BY DOLAN DESIGN (FIXTURE) #TC350–GU RECESSO LIGHTING BY DOLAN DESIGN (TRIM) #T351N–BK	RECESSED	(1) MR16 GU10 ECOSTORY LED	7W	120V/1PH
D4		INDUSTRIAL DOME SHADE LED PENDANT. HILITE MFG #H–MLC63DH78H3M	CEILING	(3) 3.5W LED DIMMABLE	10.5W	120V/1PH
F1		LINEAR LED FIXTURE, SLIM PROFILE, LOCATED ON ROOF PARAPET (WET LOCATION LISTED) WITH INTEGRAL DRIVER. FIELD VERIFY LENGTHS REQUIRED PRIOR TO ORDER. 3" SQUARE EXTRUSION FITTED WITH FLUSH FROSTED LENS. REFER TO ARCH PLANS FOR DETAILS BARTCO LIGHTING #BSW214–4–35–ID–R–SM–BL	COVE/PARAPET	8.0W/LF LED 3500K 80 CRI	8.0W	120V/1PH
F2		"COLORLINE" SERIES, ORANGE EXTERIOR LED AT CORNICE, SLIM PROFILE, LOCATED ON ROOF, CONFIRM 12VDC STEP–DOWN TRANSFORMER INFORMATION (WET LOCATION LISTED). FIELD VERITY LENGTH REQUIRED PRIOR TO ORDER. SLOAN LED #701800–ORANGE–X BY SIGN CONTRACTOR	SURFACE	LED (2.3W/FT) 24FT PER 60W XFMR	2.3W/FT	120V/1PH
G		4" RECESSED DOWNLIGHT, NON–IC HOUSING, BLACK GIMBAL TRIM ELITE #B4R–AT–W–B461BK	RECESSED	(1) 5W PAR20 PLT LED 3000K	5W	120V/1PH
J		"TRAC 12" MINIATURE LINE VOLTAGE TRACK LIGHTING FIXTURE, CLEAR GLASS LENS. PROVIDE WITH (150W) CURRENT LIMITER #TCLF11 BL FOR UP TO (21) 'J' FIXTURES. VERIFY AND PROVIDE TRACK LENGTHS AS REQUIRED. REFER TO LIGHTING PLAN FOR LAYOUT. CONTECH LIGHTING (FIXTURE) #CTL816GU10B JUNO LIGHTING (4FT TRACK) #T4BL JUNO LIGHTING (8FT TRACK) #T8BL	TRACK	(1) 7W LED MR16 GU10 (50W EQUIVALENT)	7W	120V/1PH
J1		SAME AS TYPE "J" EXCEPT WITH 60 DEGREE FLOOD LAMP SORAA VIVID (FIXTURE) #SM16GA–07–60D–927–03	TRACK	(1) 7.5W LED MR16 GU10 2700K, 60 DEG BEAM (50W EQUIVALENT)	7.5W	120V/1PH
K		2x4 EDGELIT LED PANEL RAB LIGHTING #EZPAN2X4–50/D10	RECESSED	5270 LUMENS 5000K	50W	120V/1PH
KX		SAME AS TYPE 'K' EXCEPT WITH MINIMUM 1400 LUMENS, 90 MIN EMERGENCY BATTERY PACK. RAB LIGHTING #EZPAN2X4–50/D10/E2	RECESSED	5270 LUMENS 5000K	50W	120V/1PH
KA		1x4 LENSED TROFFER, STD PATTERN 12 ACRYLIC 0.100" SHIELD, WITH 2–LAMP ELECTRONIC BALLAST. COLUMBIA LIGHTING #ST814–232–G–FS–A12–U	LAY–IN GRID	(2)–T8 A2–15–50, 5000K	30W	120V/1PH
L1		LED TAPE LIGHT, LOW VOLTAGE 2700K WARM WHITE WITH (60W) TRANSFORMER PER 16'–4" ROLL OF TAPE LIGHT. LED COOL LIGHTS #LEDC–3–12W27K TRANSFORMER #M60L12C MOUNTED IN CONTECH LIGHTING, ALUMINUM CHANNEL TLACS6 WITH FROSTED LENS TLALF6. GC TO MITER CORNER.	UNDER BAR	LED (APPROX. 2.0W/FT), 16.4 FT PER 60W XFMR	60W	120V/1PH
Z		4FT TRI PROOF LED FIXTURE, ANODIZED ALUMINUM HOUSING. INTEGRATED, SEALED IMPACT OPTICAL LENS. ZERO DEGREE BALLAST. RAB LIGHTING #SHARK4–50W/D10	SURFACE	5160 LUMENS, 5000K	50W	120V/1PH
ZX		4FT TRI PROOF LED FIXTURE, ANODIZED ALUMINUM HOUSING. INTEGRATED, SEALED IMPACT OPTICAL LENS. ZERO DEGREE BALLAST. RAB LIGHTING #SHARK4–50W/D10/E2	SURFACE	5160 LUMENS, 5000K	50W	120V/1PH
MX		4FT TRI PROOF LED FIXTURE, ANODIZED ALUMINUM HOUSING. INTEGRATED, SEALED IMPACT OPTICAL LENS WITH BATTERY BACKUP RAB LIGHTING #SHARK4–50W/D10/E2	SURFACE	5160 LUMENS, 5000K	50W	120V/1PH
N		LED WALL PACK FIXTURE AND DARK BRONZE FINISH RAB# SLIM 37N	WALL MOUNTED	(1) 37W LED	37W	120V/1PH
PF2		LED PENDANT. KITCHLER LIGHTING #S185440–OZHS	SUSPENDED	(1) 8.5 LED G40 27K	8.5W	120V/1PH
S		EMERGENCY LIGHT, INJECTION–MOLDED THERMO PLASTIC ABS HOUSING, BLACK HOUSING FINISH (VERIFY WITH OWNER), WITH 90 MINUTE EMERGENCY BATTERY BACKUP. BARRON LIGHTING #LED52–BL (VERIFY WITH OWNER)	SURFACE	(2) 2W LED	10W	120V/1PH
U		"T5U" LOW PROFILE FLUORESCENT UNDERCABINET LIGHT FIXTURE, INTEGRAL ROCKER SWITCH, AND ELECTRONIC BALLAST. AMERICAN FLUORESCENT #T5U108RT	UNDERCABINET	(1) 8W T5, 12" LENGTH	12W	120V/1PH
V		OUTDOOR LED DIRECTIONAL LIGHT, WEATHERPROOF. DARK BRONZE FINISH. RAB LIGHTING #X34–16L–830/120	ROOF MOUNTED	(1) 15W LED	15W	120V/1PH
W3		EXTERIOR SURFACE MOUNT LED WALL SCONCE WAC LIGHTING #WS–W45720–BK	SURFACE	19.5 LED	19.5W	120V/1PH
W4		SURFACE MOUNT UP/DOWN LIGHT WITH TOP COVER LENSE. BRONZE. PROGRESS LIGHTING #P5675–20	SURFACE	(2) 13W LED PAR30	26W	120V/1PH
X		LED EXIT SIGN, INJECTION MOLDED, SINGLE/DOUBLE SIDED AND CHEVRON DIRECTIONAL ARROWS AS INDICATED ON PLANS, WITH 90 MINUTE EMERGENCY BATTERY BACKUP. TCP LIGHTING #22747	SURFACE	(1) 3.8W LED	5W	120V/1PH

NOTES:
A. PROVIDE WITH SHATTER–RESISTANT LENSES/BULBS OVER ALL FOOD PREPARATION AND BAR AREAS.
B. ALL LIGHT FIXTURES ARE TO BE PURCHASED AS SPECIFIED – NO SUBSTITUTIONS. ORDER FROM MELETIO ELECTRICAL SUPPLY COMPANY. CONTACT BRIDGET MASON (1–800–777–4993, EXT. 1158).
C. REFER TO MPE101 SITE PLAN FOR PARKING LOT POLE LIGHT FIXTURE SPECIFICATIONS.
D. MOUNTING HEIGHTS WHEN LISTED UNDER MOUNTING COLUMN ARE TO BOTTOM OF FIXTURE. VERIFY WITH OWNER.
E. GC TO RECEIVE 2 WEEKS PRIOR TO OPENING, STORE MANAGER LIGHT BULB PACKAGE. HOLD AND COORDINATE WITH BRINKER CONSTRUCTION REPRESENTATIVE.

ALLOWED CONDUIT LOCATIONS

CONDUIT INSTALLATION LOCATION	ALLOWABLE CONDUIT TYPE
BELOW GRADE OUTSIDE OF SLAB PERIMETER	RIGID STEEL CONDUIT OR NONMETALLIC CONDUIT (SCHEDULE 40 OR SCHEDULE 80 PVC)
BELOW GRADE GOING THRU GRADE BEAM	RIGID STEEL CONDUIT OR NONMETALLIC CONDUIT (SCHEDULE 40 OR SCHEDULE 80 PVC) WITH SLEEVE
IN OR UNDER SLAB ON GRADE	RIGID STEEL CONDUIT OR NONMETALLIC CONDUIT (SCHEDULE 40 OR SCHEDULE 80 PVC)
OUTDOOR LOCATIONS, ABOVE GRADE	RIGID STEEL CONDUIT
IN SLAB ABOVE GRADE	RIGID STEEL CONDUIT OR NONMETALLIC CONDUIT (SCHEDULE 40 OR SCHEDULE 80 PVC)
WET AND DAMP LOCATIONS	RIGID STEEL CONDUIT OR NONMETALLIC CONDUIT (SCHEDULE 40 OR SCHEDULE 80 PVC)
DRY LOCATIONS	RIGID STEEL CONDUIT AND ELECTRICAL METALLIC TUBING
ABOVE CEILING BETWEEN LIGHT FIXTURES	FLEXIBLE METAL CONDUIT (8'–0" LENGTHS MAXIMUM)

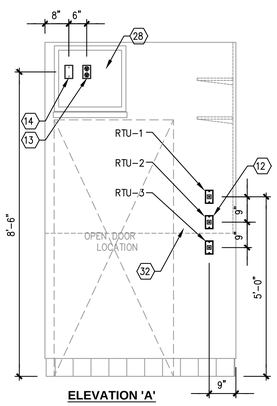

ELEVATION 'A'

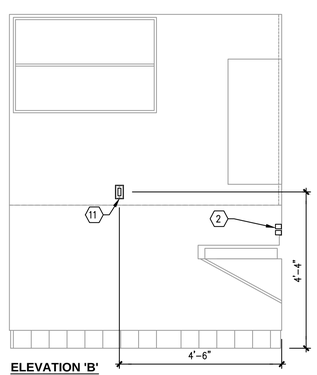

ELEVATION 'B'

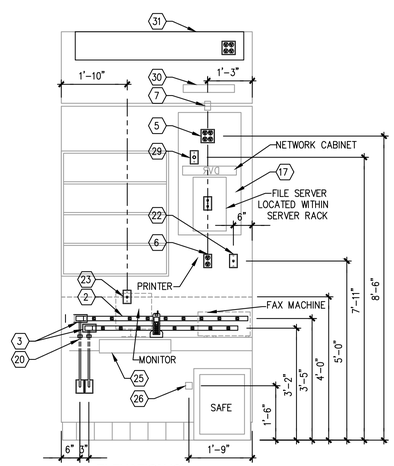

ELEVATION 'C'

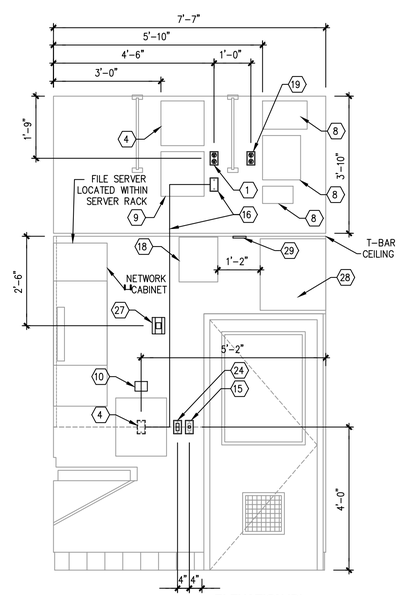

ELEVATION 'D'

OFFICE ELEVATION POWER DETAILS 2
SCALE: 1/2" = 1'-0"

ENGINEER:
BRIAN E. CHANDLER, PE
6201 CAMPUS CIRCLE DRIVE E.
IRVING, TEXAS 75038
TEL: 972.870.1288
WWW.IDSTUDIO4.COM
E-MAIL: bchandler@idstudio4.com

CORPORATE:
BRINKER RESTAURANT CORPORATION, A VIRGINIA CORPORATION
3000 OLYMPUS BLVD.
DALLAS, TEXAS 75019
972.980.9917
www.brinker.com

09/23/2024
ISSUE FOR BID
THESE DOCUMENTS ARE FOR BIDDING PURPOSES ONLY. DO NOT USE FOR CONSTRUCTION.

RESTAURANT #CH1679
PROTOTYPE 18.5FS

CHILI'S TOOELE
951 N MAIN STREET
TOOELE, UT 84074

CLIENT: BRINKER RESTAURANT CORP. A VIRGINIA CORPORATION

DATE	DESCRIPTION
6/27/2024	ISSUE FOR PERMIT
9/23/2024	ISSUE FOR BID

△	DATE	DESCRIPTION

PROJECT NUMBER:
CHI24007

SHEET TITLE:
ELECTRICAL DETAILS AND SCHEDULES

SHEET NUMBER:
E202

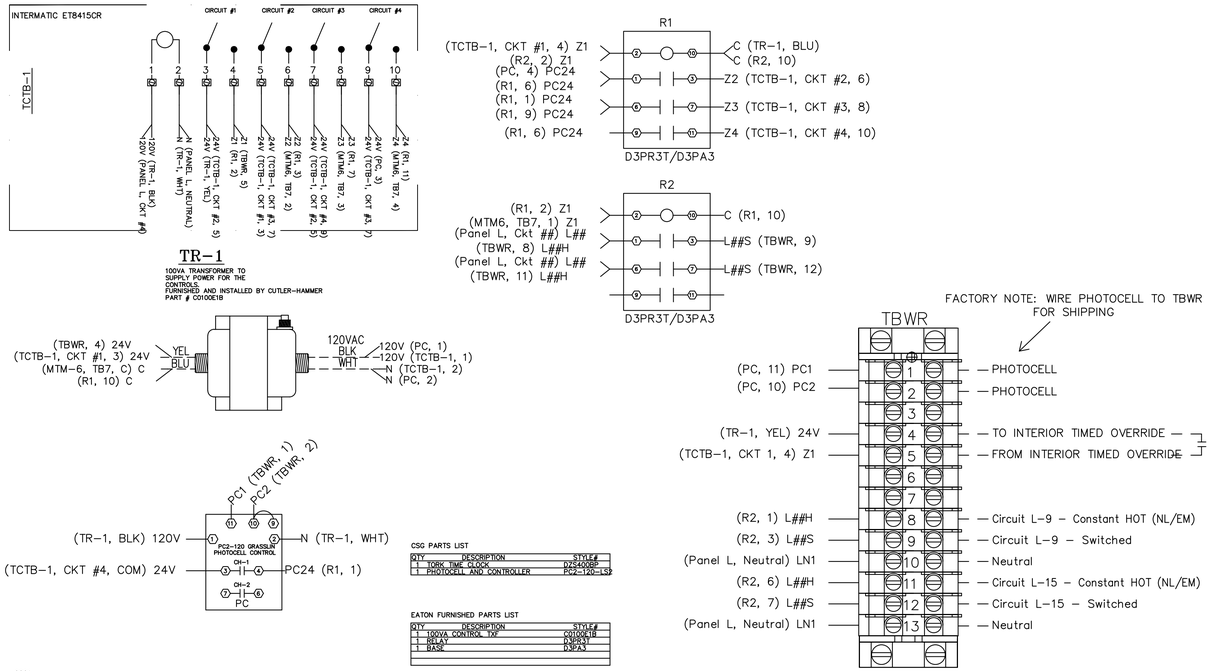

CSG PARTS LIST

QTY	DESCRIPTION	STYLE#
1	TORK TIME CLOCK	D7640SRP
1	PHOTOCELL AND CONTROLLER	PC2-120-LS3

EATON FURNISHED PARTS LIST

QTY	DESCRIPTION	STYLE#
1	100VA CONTROL TXF	C0100E1B
1	RELAY	D3PR3T
1	BASE	D3PA3

0001

REVISION	
01	

NOTES:

1) ALL SECONDARY WIRING IS #14 STRANDED TINNED COPPER WIRE UNLESS SPECIFIED OTHERWISE.
2) ALL DEVICES ARE SHOWN DE-ENERGIZED OR IN RELAXED STATE.
3) ALL CONNECTIONS TO GROUND ARE TO BE MADE WITH #12 COPPER WIRE.
4) UNUSED POWER LEAD (YELLOW) IS TO BE CAPPED INSIDE CONTROL UNIT.
5) NOT USED, CAP OFF UNUSED LEAD

THE INFORMATION ON THIS DOCUMENT WAS CREATED BY WESCO RETAIL & COMMERCIAL. IT WAS DISCLOSED IN CONFIDENCE AND IS ONLY TO BE USED FOR THE PURPOSE IN WHICH IT WAS SUPPLIED.

DFTR BDF	DATE 1/31/18	WESCO Retail & Commercial	EATON SUMTER, SC
APPD	DATE	TITLE Chili's Bar & Grill City, State	
S.O.		TYPE LOW VOLTAGE SWITCHBOARD	ELEVATION
FEDERAL ID NO.	PRODUCT CODE DE	REVISION 01	G.O. CHILI####-001 / DWG CHI###-W1 / SHEET 1 - 2

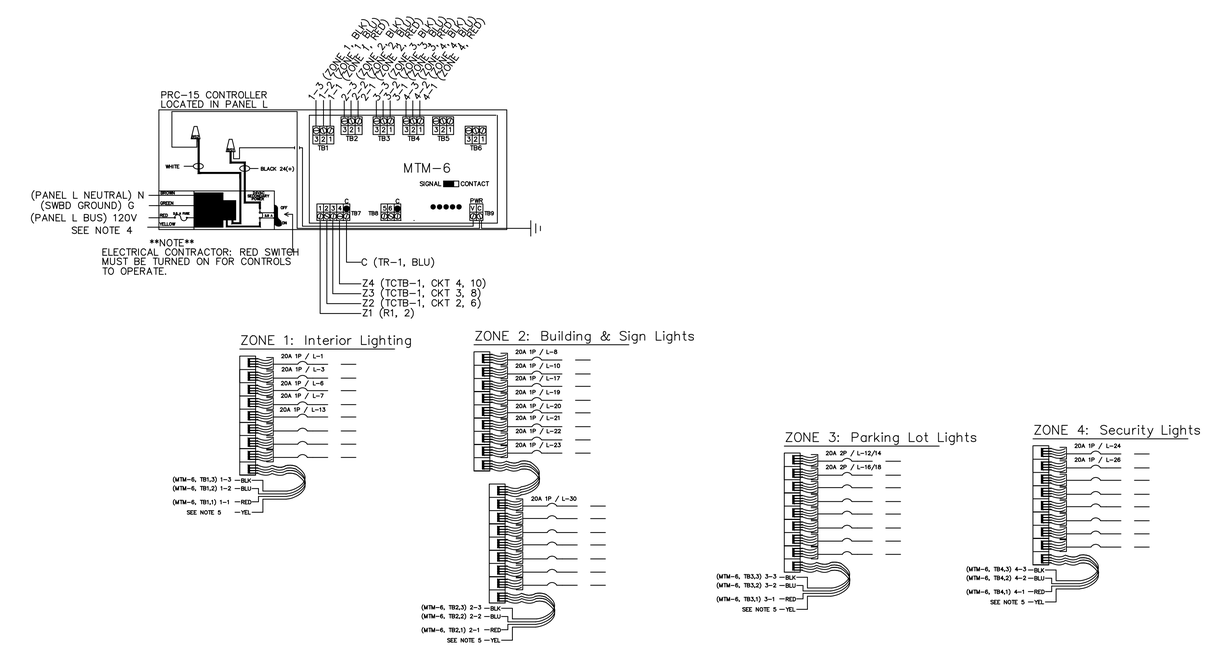

0001

REVISION	
01	

NOTES:

1) ALL SECONDARY WIRING IS #14 STRANDED TINNED COPPER WIRE UNLESS SPECIFIED OTHERWISE.
2) ALL DEVICES ARE SHOWN DE-ENERGIZED OR IN RELAXED STATE.
3) ALL CONNECTIONS TO GROUND ARE TO BE MADE WITH #12 COPPER WIRE.
4) UNUSED POWER LEAD (YELLOW) IS TO BE CAPPED INSIDE CONTROL UNIT.
5) NOT USED, CAP OFF UNUSED LEAD

THE INFORMATION ON THIS DOCUMENT WAS CREATED BY WESCO RETAIL & COMMERCIAL. IT WAS DISCLOSED IN CONFIDENCE AND IS ONLY TO BE USED FOR THE PURPOSE IN WHICH IT WAS SUPPLIED.

DFTR BDF	DATE 1/31/18	WESCO Retail & Commercial	EATON SUMTER, SC
APPD	DATE	TITLE Chili's Bar & Grill City, State	
S.O.		TYPE LOW VOLTAGE SWITCHBOARD	ELEVATION
FEDERAL ID NO.	PRODUCT CODE DE	REVISION 01	G.O. CHILI####-001 / DWG CHI###-W1 / SHEET 2 - 2

LIGHTING CONTROLS LOW VOLTAGE CONTROLS DETAIL 1
SCALE: NONE

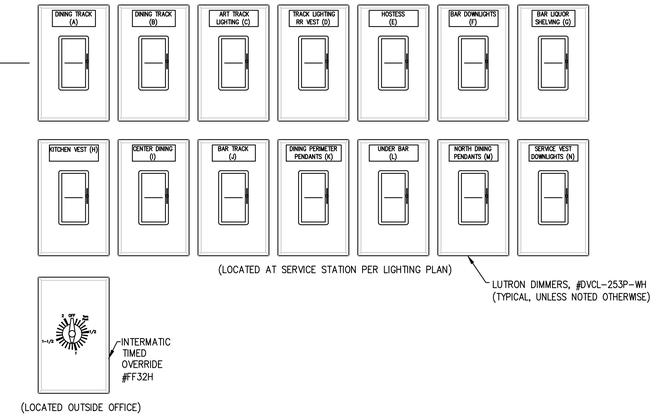

GENERAL LIGHTING CONTROL NOTES

A.	COORDINATE FINAL LABEL AND SWITCH ARRANGEMENT WITH OWNER.
B.	COORDINATE ENGRAVING WITH LUTRON.
C.	REFER TO SHEET 'E101' FOR OVERRIDE SWITCH LOCATIONS.
D.	OWNER PROVIDED TIMED OVERRIDE SWITCH, INTERMATIC MODEL #FF32H SERIES WITH MAX 2-HR OVERRIDE.
E.	EQUIPMENT GROUND NOT SHOWN, BUT REQUIRED.
F.	ALL 120 VOLT CONTROL WIRING SHALL BE #12A.W.G.
G.	THIS DETAIL IS DIAGRAMMATIC IN NATURE, REFER TO INTERMATIC/TORK INSTRUCTION MANUALS FOR ALL WIRING REQUIREMENTS.
H.	PROVIDE FIELD-WIRING FOR LIGHT SWITCHES AND PHOTOCELL AS REQUIRED PER MANUFACTURER RECOMMENDATION. REFER TO LIGHT FIXTURE SCHEDULE, SHEET 'E202', FOR FIXTURE DESCRIPTIONS, MANUFACTURER AND MODEL NUMBERS.
I.	PROVIDE LABELS FOR "CLEANUP" TIMED OVERRIDE SWITCH OUTSIDE OF OFFICE.
J.	ALL EXTERIOR SIGNAGE AND EXTERIOR BUILDING LIGHTS INCLUDING PARKING LOT LIGHTS SHALL BE CONTROLLED BY TIME CLOCK AND/OR PHOTOCELL AS DESCRIBED IN THE LIGHTING CONTROL SCENARIO BELOW. FIXTURES WITH "NL" INDICATE NIGHT LIGHT FUNCTION THAT SHALL BE UNSWITCHED AND SHALL NOT BE CIRCUITED VIA TIMECLOCK/CONTACTORS.
K.	EACH DIMMER SHALL BE INSTALLED IN ITS OWN DEDICATED JUNCTION BOX. SPACE THE JUNCTION BOXES SO THAT INDIVIDUAL STAINLESS STEEL FACE PLATES WILL FIT SIDE BY SIDE.
L.	PROVIDE DEDICATED NEUTRALS FOR EACH DIMMER.

LIGHTING CONTROLS LABEL GUIDE 2
SCALE: NONE

CHILI'S LIGHTING CONTROL SCENARIO

A. INTERIOR LIGHTING

- THE TIME CLOCK WILL TURN THE LIGHTS ON.
- THE TIME CLOCK WILL TURN THE LIGHTS OFF.
- THERE WILL BE A 2-HOUR MANUALLY ACTIVATED TIMED OVERRIDE SWITCH THAT WILL OVERRIDE THE TIME CLOCK AND TURN ON INTERIOR LIGHTS.

B. BUILDING AND SIGN LIGHTING (EXTERIOR)

- THERE WILL BE A PHOTOCELL CONTROL ZONE (SAME AS INTERIOR LIGHTING) THAT WILL INITIATE THE PHOTOCELL. WHEN THIS ZONE IS ACTIVE, AND THE PHOTOCELL IS ACTIVE, THE LIGHTS WILL BE ON.
- THERE WILL ALSO BE A TIME CLOCK ZONE FOR THE BUILDING AND SIGN LIGHTING, WHICH WILL ACTIVATE THE LIGHTS AT A SET TIME.

C. PARKING LOT LIGHTING (EXTERIOR)

- THERE WILL BE A PHOTOCELL CONTROL ZONE (SAME AS INTERIOR LIGHTING) THAT WILL INITIATE THE PHOTOCELL. WHEN THIS ZONE IS ACTIVE, AND THE PHOTOCELL IS ACTIVE, THE LIGHTS WILL BE ON.
- THERE WILL ALSO BE A TIME CLOCK ZONE FOR THE PARKING LOT LIGHTING, WHICH WILL ACTIVATE THE LIGHTS AT A SET TIME.

D. SECURITY LIGHTING (EXTERIOR)

- THERE WILL BE A PHOTOCELL CONTROL ZONE (SAME AS INTERIOR LIGHTING) THAT WILL INITIATE THE PHOTOCELL. WHEN THIS ZONE IS ACTIVE, AND THE PHOTOCELL IS ACTIVE, THE LIGHTS WILL BE ON.
- THERE WILL ALSO BE A TIME CLOCK ZONE FOR THE SECURITY LIGHTING, WHICH WILL ACTIVATE THE LIGHTS AT A SET TIME.

EXAMPLE:
TIME CLOCK PROGRAMMING:

- INTERIOR LIGHTS (PHOTOCELL CONTROL) ON AT 10AM, OFF AT 1AM.
- BUILDING & SIGN LIGHTS (EXTERIOR) ON AT ½ HOUR PRIOR TO SUNSET, OFF AT 12AM (OR CLOSE)
- PARKING LOT LIGHTING (EXTERIOR) ON AT ½ HOUR PRIOR TO SUNSET, OFF AT 2AM.
- EXTERIOR SECURITY LIGHTING (EXTERIOR) ON AT ½ HOUR PRIOR TO SUNSET, OFF AT ½ HOUR AFTER SUNRISE

IN THE GIVEN SCENARIO, THE INTERIOR LIGHTS WOULD BE ON FROM 10AM, UNTIL 1AM. THE EXTERIOR LIGHTING WOULD BE ON BETWEEN 11AM AND 12AM IF THE PHOTOCELL IS ACTIVE. THE BUILDING AND SIGN LIGHTS WILL BE ON FROM ½ HOUR PRIOR TO SUNSET UNTIL 12AM (OR CLOSE) REGARDLESS OF THE STATE OF THE PHOTOCELL. THE PARKING LOT LIGHTS WILL BE ON FROM ½ HOUR PRIOR TO SUNSET UNTIL 2AM REGARDLESS OF THE STATE OF THE PHOTOCELL. THE EXTERIOR LIGHTS WILL BE ON FROM ½ HOUR PRIOR TO SUNSET UNTIL ½ HOUR AFTER SUNRISE REGARDLESS OF THE STATE OF THE PHOTOCELL.

ALL CIRCUITS WILL HAVE THE ABILITY TO BE OVERRIDDEN AT THE BREAKER IN THE CASE OF CONTROL FAILURE.

LIGHTING WIRING DIAGRAM DETAIL 3
SCALE: NONE

ENGINEER:

BRIAN E. CHANDLER, PE

6201 CAMPUS CIRCLE DRIVE E.
IRVING, TEXAS 75038
TEL: 972.870.1288
WWW.IDSTUDIO4.COM
E-MAIL: bchandler@idstudio4.com

CORPORATE:
BRINKER RESTAURANT CORPORATION, A VIRGINIA CORPORATION
3000 OLYMPUS BLVD.
DALLAS, TEXAS 75019
972.980.9917
www.brinker.com

09/23/2024
ISSUE FOR BID
THESE DOCUMENTS ARE FOR BIDDING PURPOSES ONLY. DO NOT USE FOR CONSTRUCTION.

RESTAURANT #CH1679
PROTOTYPE 18.5FCS

CHILI'S TOOELE
951 N MAIN STREET
TOOELE, UT 84074

CLIENT: BRINKER RESTAURANT CORP. A VIRGINIA CORPORATION

DATE	DESCRIPTION
6/27/2024	ISSUE FOR PERMIT
9/23/2024	ISSUE FOR BID

⚠	DATE	DESCRIPTION

PROJECT NUMBER:
CHI24007

SHEET TITLE:
ELECTRICAL DETAILS

SHEET NUMBER:
E203

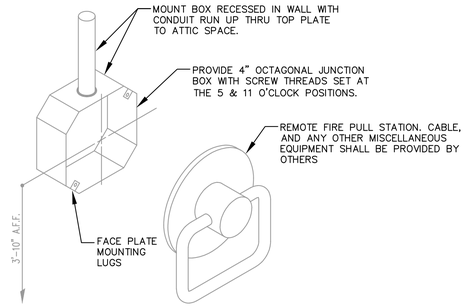

4/0 BOX WITH 1/2" TABS POSITIONED AS SHOWN WITH TABS IN UPPER RIGHT AND LOWER LEFT OF BOX. BOX TO BE 4'-0" A.F.F., 1/2" E.M.T. TO RUN FROM BOX TO 12" ABOVE CEILING LINE. ONE(1) 4/0 BOX IS TO BE PROVIDED FOR EACH PULL STATION. 4/0 BOX, 1/2" TABS, AND CONDUIT TO BE FURNISHED BY THE ELECTRICAL CONTRACTOR.

ANSUL PULL STATION DETAIL 1
SCALE: NONE

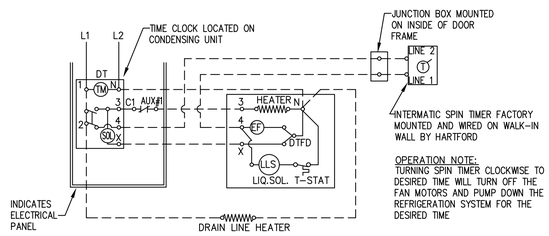

INTERMATIC SPIN TIMER FACTORY MOUNTED AND WIRED ON WALK-IN WALL BY HARTFORD

OPERATION NOTE:
TURNING SPIN TIMER CLOCKWISE TO DESIRED TIME WILL TURN OFF THE FAN MOTORS AND PUMP DOWN THE REFRIGERATION SYSTEM FOR THE DESIRED TIME

NOTES:
1. DRAIN LINE HEATER BY REFRIGERATION CONTRACTOR. PROVIDE 6 WATTS OF HEATER CABLE FOR EACH FLOOR OF DRAIN LINE. EXTEND HEATER CABLE TO FREEZER WALL. WRAP HEATER CABLE AND DRAIN LINE WITH INSULATION TAPE.
2. WIRING: FACTORY WIRED
FIELD WIRING IN CONDUIT BY ELECTRICAL CONTRACTOR.
INDICATES WHICH COMPONENTS ARE LOCATED IN THE REFRIGERATION ELECTRICA PANEL

NOTE:
REFRIGERATION CONTRACTOR SET TIME CLOCK FOR 25 MIN. DEFROST CYCLE
@
6:00 AM
12:00 PM
6:00 PM
12:00 AM

FREEZER SHUT-DOWN TIMER 2
SCALE: NONE

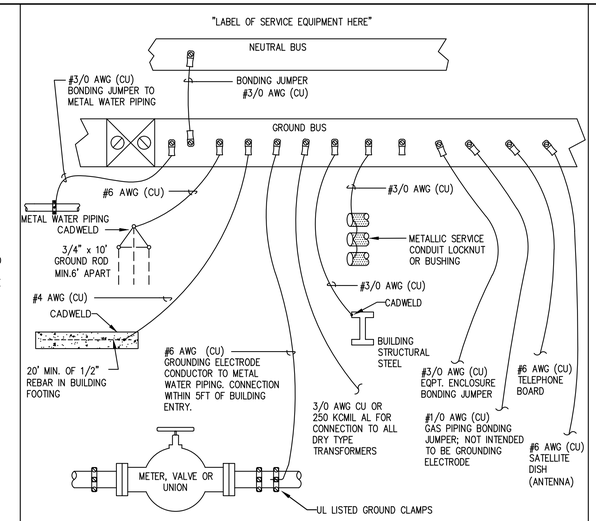

ELECTRICAL GROUNDING DETAIL 3
SCALE: NONE

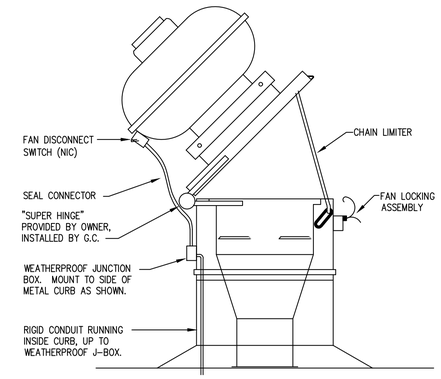

JUNCTION BOX @ FAN CURB 4
SCALE: NONE

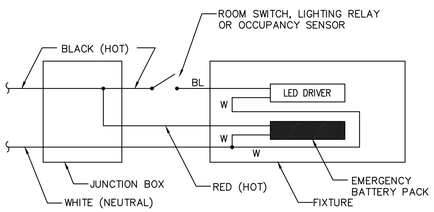

EMERGENCY LIGHTING WIRING DETAIL 5
SCALE: NONE

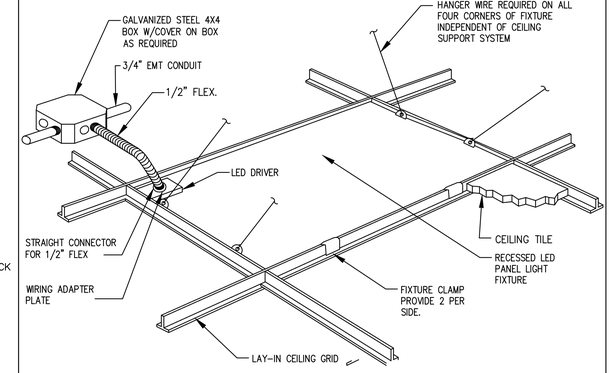

TYPICAL LAY-IN LED PANEL FIXTURE MOUNTING DETAIL 6
SCALE: NONE

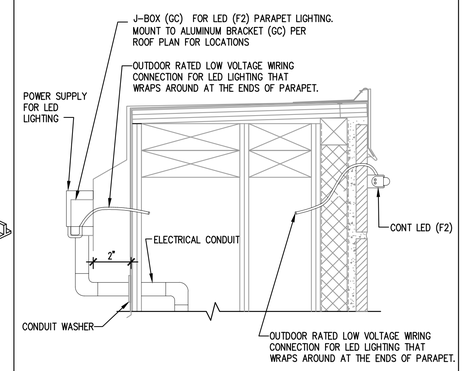

CONDUIT ROUTING DETAIL-FIXTURE TYPE 'F2' 7
SCALE: NONE

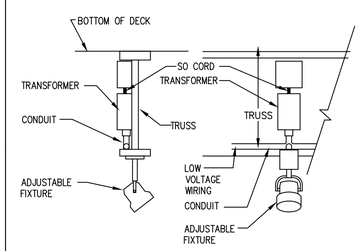

FIXTURE 'J' MOUNTING DETAIL 8
SCALE: NONE

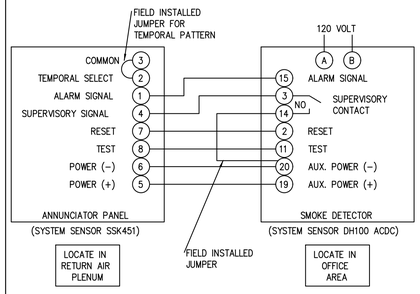

SMOKE DETECTOR WIRING DIAGRAM 9
SCALE: NONE

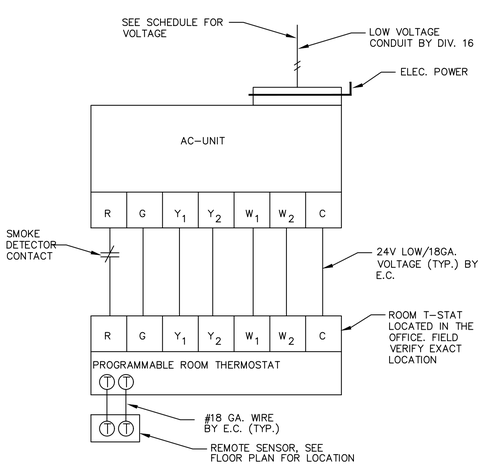

THERMOSTAT WIRING DIAGRAM 10
SCALE: NONE

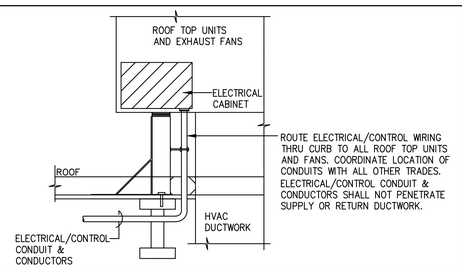

CONDUIT ROUTING DETAIL 11
SCALE: NONE

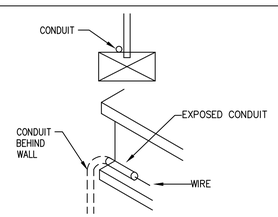

CONDUIT DETAIL 12
SCALE: NONE

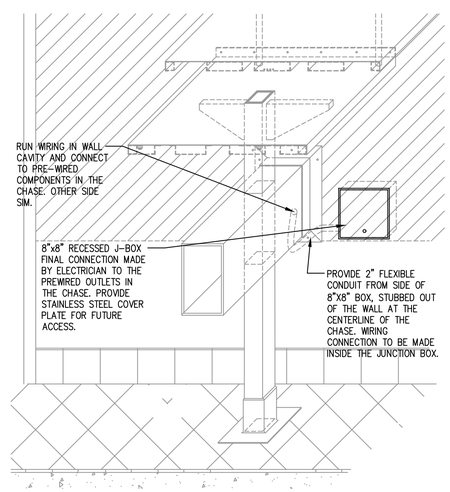

PASS THROUGH CONDUIT DETAIL 13
SCALE: NONE

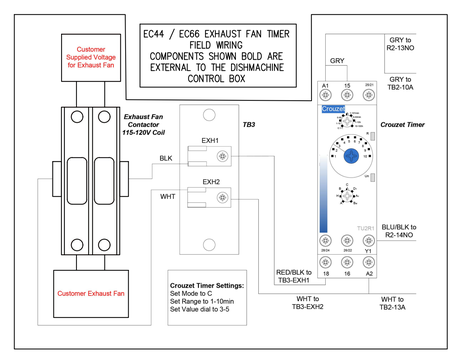

CONVEYOR EXHAUST FAN TIMER FIELD WIRING DIAGRAM 14
SCALE: NONE

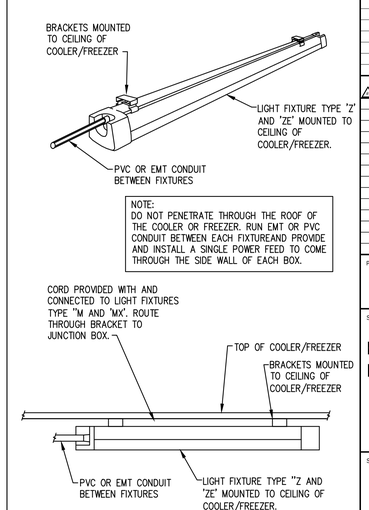

NOTE:
DO NOT PENETRATE THROUGH THE ROOF OF THE COOLER OR FREEZER. RUN EMT OR PVC CONDUIT BETWEEN EACH FIXTUREAND PROVIDE AND INSTALL A SINGLE POWER FEED TO COME THROUGH THE SIDE WALL OF EACH BOX.

TYPE 'Z' MOUNTING DETAIL WITHIN REFRIG 15
SCALE: NONE

ENGINEER:
BRIAN E. CHANDLER, PE
6201 CAMPUS CIRCLE DRIVE E.
IRVING, TEXAS 75038
TEL: 972.870.1288
WWW.IDSTUDIO4.COM
E-MAIL: bchandler@idstudio4.com

CORPORATE:
BRINKER RESTAURANT CORPORATION, A VIRGINIA CORPORATION
3000 OLYMPUS BLVD.
DALLAS, TEXAS 75019
972.980.9917
www.brinker.com

09/23/2024
ISSUE FOR BID
THESE DOCUMENTS ARE FOR BIDDING PURPOSES ONLY. DO NOT USE FOR CONSTRUCTION.

RESTAURANT #CH1679
PROTOTYPE 18.5FS

CHILI'S TOOELE
951 N MAIN STREET
TOOELE, UT 84074

CLIENT: BRINKER RESTAURANT CORP. A VIRGINIA CORPORATION

DATE	DESCRIPTION
6/27/2024	ISSUE FOR PERMIT
9/23/2024	ISSUE FOR BID

DATE	DESCRIPTION

PROJECT NUMBER:
CHI24007

SHEET TITLE:
ELECTRICAL DETAILS

SHEET NUMBER:
E204

ELECTRICAL SYMBOL LEGEND

SYMBOL	DESCRIPTION
	2 X 4 LED FIXTURE
	2 X 4 LED FIXTURE WITH BATTERY BACKUP
	1 X 4 LED FIXTURE
	1 X 4 LED FIXTURE WITH BATTERY BACKUP
	4' LED STRIP FIXTURE
	4' LED STRIP FIXTURE WITH BATTERY BACKUP
	SURFACE MOUNTED TRACK AND TRACK HEAD
	PENDANT MOUNTED LIGHT FIXTURE
	RECESSED DOWNLIGHT FIXTURE
	RECESSED WALLWASH LIGHT FIXTURE
	WALL MOUNTED LIGHT FIXTURE
	HOOD LIGHT
	CEILING MOUNTED EXIT SIGN, SHADE INDICATES FACE
	WALL/CEILING MOUNTED EMERGENCY BUGEYE FIXTURE
	COMBINATION EXIT SIGN/EMERGENCY BUGEYE
	EMERGENCY REMOTE HEAD LIGHT FIXTURE
	JUNCTION BOX
	WALL MOUNTED DUPLEX RECEPTACLE
	FLOOR MOUNTED DUPLEX RECEPTACLE
	WALL MOUNTED SINGLE RECEPTACLE
	FLOOR MOUNTED SINGLE RECEPTACLE
	SPECIAL RECEPTACLE
	WALL MOUNTED QUADRUPLEX RECEPTACLE
	WALL MOUNTED DUPLEX RECEPTACLE WITH USB CHARGER
	SINGLE POLE SWITCH
	THREE POLE LIGHT SWITCH
	PILOT LIGHT SWITCH
	SINGLE THROW THERMAL SWITCH
	MOTOR RATED SWITCH
MS	MOTION SENSOR
	BUZZER
	BELL
	PUSHBUTTON (MOMENTARY)
	MOTOR
	TELEPHONE BACKBOARD
	TELEPHONE OUTLET
	FLOOR MOUNTED TELEPHONE OUTLET
	POS CONNECTION
	FLOOR MOUNTED POS CONNECTION
	COMBINATION DATA AND PHONE JACK
	FLOOR MOUNTED COMBINATION DATA AND PHONE JACK
	DISCONNECT SWITCH
P	PAGER OUTLET
S	SECURITY JUNCTION BOX
	TELEVISION JACK
K	KEYED SWITCH
	PANELBOARD
T	TRANSFORMER
LT	LOW VOLTAGE DOORBELL TRANSFORMER
	SWITCHED CIRCUITRY BURIED OR IN SLAB
	CIRCUITRY IN WALL OR CEILING
	HOMERUN BACK TO PANEL
	POINT OF CONNECTION
IG	ISOLATED GROUND
WP	WEATHERPROOF
GFI	GROUND FAULT CIRCUIT INTERRUPTER
MCT	MOTOR CONTROL TERMINAL
PTR	PRIOR TO ROUGH-IN
IFS	INTEGRATED FACILITY STRUCTURE (SWITCHGEAR)
IPC	INTEGRATED POWER CENTER (SWITCHGEAR)
FACP	FIRE ALARM CONTROL PANEL
FAAP	FIRE ALARM ANNUNCIATOR PANEL
F	FIRE ALARM PULL STATION
	FIRE ALARM HORN/STROBE DEVICE
	FIRE ALARM STROBE DEVICE
	FIRE ALARM CEILING MOUNT HORN/STROBE DEVICE
W	FIRE ALARM WATER FLOW HORN/STROBE DEVICE
	FIRE ALARM SMOKE DETECTOR
	FIRE ALARM HEAT DETECTOR
	FIRE ALARM DUCT SMOKE DETECTOR
RT	REMOTE TEST SWITCH
TS	TAMPER SWITCH
FS	FLOW SWITCH

NOTE: NOT ALL SYMBOLS MAY APPEAR ON DRAWINGS.

PANEL: A 225A MLO 120/ 208 V, 3PH, 4W.+GRND. FAULT AT PANEL= 12038 22,000 AIC SERIES RATED

CCT	SERVES	VA	OCP	WIRE	PHASE	WIRE	OCP	VA	SERVES	CCT
1	SPARE		20/1	-	A	2#12,#12G.,3/4"C.	20/1	900	HOOD LIGHTS (229)	2
3	GRIDDLE (215)	360	20/1 GFI	2#12,#12G.,3/4"C.	B	-	20/1		SPARE	4
5	HOOD LIGHTS (112)	900	20/1	2#12,#12G.,3/4"C.	C	-	20/1 GFI		SPARE	6
7	COMBINATION OVEN/STEAMER (240-1)	5467	60/3	3#4,#10G.,3/4"C.	A	3#8,#10G.,3/4"C.	40/3	3600	TURBO CHEF OVEN (241)	8
9	---	5467	-	---	B	---	-	3600	---	10
11	---	5467	-	---	C	---	-	3600	---	12
13	RETHERMILIZER (216)	4000	50/2	3#6,#10G.,1"C.	A	-	20/1		SPARE	14
15	---	4000	-	---	B	-	20/1		SPARE	16
17	MEAT REFRIGERATOR (231)	1200	20/1 GFI	2#12,#12G.,3/4"C.	C	2#12,#12G.,3/4"C.	20/1 GFI	1352	REFRIGERATED BATTER STATION (210)	18
19	FRYER CONTROLS (201)	1464	20/1 GFI	2#12,#12G.,3/4"C.	A	3#4,#10G.,3/4"C.	60/3	5467	COMBINATION OVEN/STEAMER (240-2)	20
21	PORTABLE HOT FOOD WELL (530)	1200	20/1 GFI	2#12,#12G.,3/4"C.	B	---	-	5467	---	22
23	PORTABLE HOT FOOD WELL (530)	1200	20/1 GFI	2#12,#12G.,3/4"C.	C	---	-	5467	---	24
25	SPARE		20/1 GFI	-	A	-	20/1		SPARE	26
27	TIMERS (206B)	200	20/1 GFI	2#12,#12G.,3/4"C.	B	-	20/1		SPARE	28
29	REFRIGERATED EQUIP STAND (246)	960	20/1 GFI	2#12,#12G.,3/4"C.	C	-	20/1 GFI		SPARE	30
31	SPACE		-	-	A	3#8,#10G.,3/4"C.	40/3	3600	TURBO CHEF OVEN (241)	32
33	SPACE		-	-	B	---	-	3600	---	34
35	SPACE		-	-	C	---	-	3600	----	36
37	SPACE		-	-	A	-	-		SPACE	38
39	SPACE		-	-	B	-	-		SPACE	40
41	SPACE		-	-	C	-	-		SPACE	42

NOTES:
1 NEMA 1 ENCLOSURE
2 PROVIDE BOLT ON BREAKERS

GFI = GFI BREAKER

LOAD SUMMARY	CONN	NEC	DEM	LOAD BALANCE PER PHASE		
1-LIGHTING	900	1.25	1125	PHASE A		24498
2-RECEPTACLES	0	NEC	0	PHASE B		23894
3-KITCHEN	71238	0.65	46304.7	PHASE C		23746
4-HVAC	0	1	0	LOWEST PHASE PLUS 10%		
5-NON-CONT	0	1	0	23746	+ 10%	26120.6
LARGEST MOTOR	0	0.25	0	PHASES ARE BALANCED		
TOTAL VA	72138		47429.7			
TOTAL AMPS	200.2		131.7			

PANEL: K 225A MLO 120/ 208 V, 3PH, 4W.+GRND. FAULT AT PANEL= 12857 22,000 AIC SERIES RATED

CCT	SERVES	VA	OCP	WIRE	PHASE	WIRE	OCP	VA	SERVES	CCT
1	WALK-IN COOLER COIL (002A)	480	20/1	2#12,#12G.,3/4"C.	A	2#12,#12G.,3/4"C.	20/2 GFI	1560	INDUCTION PLATE HEATER (253)	2
3	WALK-IN COOLER COIL (002A)	480	20/1	2#12,#12G.,3/4"C.	B	---	-	1560	---	4
5	MICROWAVE OVEN (532B)	800	20/1 GFI	2#12,#12G.,3/4"C.	C	2#12,#12G.,3/4"C.	20/2 GFI	1560	INDUCTION PLATE HEATER (253)	6
7	HEAT TAPE (002E)	2000	30/1 GFI	2#10,#10G.,3/4"C.	A	---	-	1560	---	8
9	SPARE		20/1 GFI	-	B	2#12,#12G.,3/4"C.	20/2	1092	48" HEAT STRIP - UPPER (507A)	10
11	REFRIG BATTER STATION (210)	1352	20/1 GFI	2#12,#12G.,3/4"C.	C	---	-	1092	---	12
13	REACH-IN FREEZER (223)	800	20/1 GFI	2#12,#12G.,3/4"C.	A	2#12,#12G.,3/4"C.	20/2	1092	48" HEAT STRIP - UPPER (507A)	14
15	RECEPTACLE - CLOCK	1200	20/1 GFI	2#12,#12G.,3/4"C.	B	---	-	1092	---	16
17	SODA TOWER (400)	1800	20/1 GFI	2#12,#12G.,3/4"C.	C	-	20/1 GFI		SPARE	18
19	DOOR CHIME AND CLOCK RECEPT	600	20/1	2#12,#12G.,3/4"C.	A	2#12,#12G.,3/4"C.	20/1	1200	COOLER LTS(002), FREEZER LTS (002B)	20
21	SPARE		20/1 GFI	-	B	2#12,#12G.,3/4"C.	20/1 GFI	1800	COCKTAIL STATIONS (618)	22
23	UNDERCOUNTER REFRIG (503)	384	20/1 GFI	2#12,#12G.,3/4"C.	C	2#12,#12G.,3/4"C.	20/2	1092	48" HEAT STRIP - LOWER (507B)	24
25	COMBINATION COFFEE / TEA (402)	800	20/1 GFI	2#12,#12G.,3/4"C.	A	---	-	1092	---	26
27	BACK BAR REFRIGERATOR (632A)	1800	20/1 GFI	2#12,#12G.,3/4"C.	B	2#10,#10G.,3/4"C.	20/1 GFI	1200	TORTILLA PRESS (521)	28
29	CARBONATOR (408)	744	20/1 GFI	2#12,#12G.,3/4"C.	C	2#12,#12G.,3/4"C.	20/2 GFI	1394	BUN TOASTER (519)	30
31	REACH-IN REFRIGERATOR (504)	800	20/1 GFI	2#12,#12G.,3/4"C.	A	---	-	1394	---	32
33	SPARE		20/1	-	B	2#12,#12G.,3/4"C.	20/1 GFI	1800	GLASS WASHER (613)	34
35	SPARE		20/1 GFI	-	C	2#12,#12G.,3/4"C.	20/1 GFI	504	DROP-IN FREEZER (522)	36
37	CHIP HOLDING CABINET (420)	1112	20/1 GFI	2#12,#12G.,3/4"C.	A	2#12,#12G.,3/4"C.	20/1 GFI	1200	QUAD HOLDING BIN (257)	38
39	UNDERCOUNTER REFRIG (423)	1200	20/1 GFI	2#12,#12G.,3/4"C.	B	2#12,#12G.,3/4"C.	20/1 GFI	1353	LINE REFRIGERATOR (518)	40
41	RECEPTS - CONVENIENCE (A&C)	720	20/1 GFI	2#12,#12G.,3/4"C.	C	2#12,#12G.,3/4"C.	20/1 GFI	1200	LINE REFRIGERATOR (529)	42
43	MEAT REFRIGERATOR (231A)	1200	20/1	2#12,#12G.,3/4"C.	A	2#12,#12G.,3/4"C.	20/1 GFI	1200	LINE REFRIGERATOR (528)	44
45	TO-GO REFRIGERATOR (409B)	600	20/1 GFI	2#12,#12G.,3/4"C.	B	-	20/1 GFI		SPARE	46
47	COMBI R.O. SYSTEM (240B)	600	20/1	2#12,#12G.,3/4"C.	C	2#12,#12G.,3/4"C.	20/1 GFI	1800	COCKTAIL STATIONS (618)	48
49	SPARE		20/1 GFI	-	A	2#12,#12G.,3/4"C.	20/1 GFI	1920	MARGARITA MACHINE (602)	50
51	PORTABLE HOT FOOD WELL (530)	1650	20/1 GFI	2#12,#12G.,3/4"C.	B	2#12,#12G.,3/4"C.	20/1 GFI	1800	MICROWAVE OVEN (532A)	52
53	FRY WARMER (524)	1445	20/2 GFI	2#12,#12G.,3/4"C.	C	2#12,#12G.,3/4"C.	20/1 GFI	840	BEER CHILLER SYSTEM (606)	54
55	---	1445	-	---	A	2#12,#12G.,3/4"C.	20/1 GFI	1800	MICROWAVE OVEN (532A)	56
57	UNDERCOUNTER REFRIG (423)	1200	20/1 GFI	2#12,#12G.,3/4"C.	B	2#12,#12G.,3/4"C.	20/1 GFI	1200	LINE REFRIGERATOR (528)	58
59	PORTABLE HOT FOOD WELL (530)	1650	20/1 GFI	2#12,#12G.,3/4"C.	C	2#10,#10G.,3/4"C.	20/1 GFI	1200	TORTILLA PRESS (521B)	60
61	RECEPTACLES - CONVENIENCE (B)	1200	20/1 GFI	2#12,#12G.,3/4"C.	A	-	20/1 GFI		SPARE	62
63	C02 SYSTEM	500	20/1 GFI	2#12,#12G.,3/4"C.	B	2#12,#12G.,3/4"C.	20/1 GFI	1800	MICROWAVE OVEN (532A)	64
65	HOT FOOD WELLS (530)	1656	20/1 GFI	2#12,#12G.,3/4"C.	C	2#12,#12G.,3/4"C.	20/2	1092	48" HEAT STRIP - UPPER (507A)	66
67	SPARE		20/1 GFI	-	A	---	-	1092	---	68
69	HOT FOOD WELLS (530)	1656	20/1 GFI	2#12,#12G.,3/4"C.	B	2#12,#12G.,3/4"C.	20/2	1092	48" HEAT STRIP - UPPER (507A)	70
71	HOT FOOD WELLS (530)	1656	20/1 GFI	2#12,#12G.,3/4"C.	C	---	-	1092	---	72
73	MICROWAVE OVEN (532A)	1800	20/1 GFI	2#12,#12G.,3/4"C.	A	2#12,#12G.,3/4"C.	20/1 GFI	1200	FLY TRAP (FT)	74
75	48" HEAT STRIP - LOWER (507B)	1092	20/2	2#12,#12G.,3/4"C.	B	2#12,#12G.,3/4"C.	20/1 GFI	1656	AIR CURTAIN (001)	76
77	---	1092	-	---	C	2#12,#12G.,3/4"C.	20/1 GFI	1200	FLY TRAP (FT)	78
79	LINE REFRIGERATOR (529A)	1440	20/1 GFI	2#12,#12G.,3/4"C.	A	2#12,#12G.,3/4"C.	20/1 GFI	264	ICE MACHINE HEADS (004A)	80
81	42" HEAT STRIP - LOWER (507B)	633	20/2	2#12,#12G.,3/4"C.	B	2#12,#12G.,3/4"C.	20/1 GFI	264	ICE MACHINE HEADS (004A)	82
83	---	633	-	---	C	-	20/1 GFI		SPARE	84

NOTES:
1 NEMA 1 ENCLOSURE
2 PROVIDE BOLT ON BREAKERS

GFI = GFI BREAKER

LOAD SUMMARY	CONN	NEC	DEM	LOAD BALANCE PER PHASE		
1-LIGHTING	2034	1.25	2542.5	PHASE A		30251
2-RECEPTACLES	2900	NEC	2900	PHASE B		29720
3-KITCHEN	81743	0.65	53132.95	PHASE C		28598
4-HVAC	0	1	0	LOWEST PHASE PLUS 10%		
5-NON-CONT	2000	1	2000	28598	+ 10%	31457.8
LARGEST MOTOR	0	0.25	0	PHASES ARE BALANCED		
TOTAL VA	88677		60575.45			
TOTAL AMPS	246.1		168.1			

PANEL: C 225A MLO 120/ 208 V, 3PH, 4W.+GRND.+ISOL. GR FAULT AT PANEL= 4639 10,000 AIC SERIES RATED

CCT	SERVES	VA	OCP	WIRE	PHASE	WIRE	OCP	VA	SERVES	CCT
1	SOUND SYSTEM - OFFICE	1200	20/1	2#12,#12G.,#12IG.,3/4"C.	A	2#12,#12G.,#12IG.,3/4"C.	20/1	300	FIRE SUPPRESSION SYSTEM - OFFICE	2
3	DAY DOT PRINTER (411)	400	20/1	2#12,#12G.,#12IG.,3/4"C.	B	2#12,#12G.,#12IG.,3/4"C.	20/1	400	WAN SYSTEM - SERVICE YARD	4
5	RECEPTACLE - P.O.S. OFFICE	600	20/1	2#12,#12G.,#12IG.,3/4"C.	C	2#12,#12G.,#12IG.,3/4"C.	20/1	200	RECEPTACLES - P.O.S. BAR (410F)	6
7	TELEPHONE SYSTEM - OFFICE	600	20/1	2#12,#12G.,#12IG.,3/4"C.	A	2#12,#12G.,#12IG.,3/4"C.	20/1 GFI	200	RECEPTACLES - P.O.S. BAR (410A)	8
9	RECEPTACLES - BAR TV	900	20/1	2#12,#12G.,#12IG.,3/4"C.	B	2#12,#12G.,#12IG.,3/4"C.	20/1 GFI	200	RECEPTACLE - PRESTO TABLE DEVICE (410I)	10
11	RECEPTACLE - OFFICE PRINTER	900	20/1	2#12,#12G.,#12IG.,3/4"C.	C	2#12,#12G.,#12IG.,3/4"C.	20/1	200	RECEPTACLES - P.O.S. DINING (410D)	12
13	RECEPTACLES - DINING TV	600	20/1	2#12,#12G.,#12IG.,3/4"C.	A	2#12,#12G.,#12IG.,3/4"C.	20/1	200	RECEPTACLES - P.O.S. DINING (410D)	14
15	RECEPTACLES - DINING TV	900	20/1	2#12,#12G.,#12IG.,3/4"C.	B	2#12,#12G.,#12IG.,3/4"C.	20/1	200	RECEPTACLES - P.O.S. DINING (410D)	16
17	WAN SYSTEM - OFFICE	400	20/1	2#12,#12G.,#12IG.,3/4"C.	C	2#12,#12G.,#12IG.,3/4"C.	20/1	200	RECEPTACLES - P.O.S. HOSTESS STAND	18
19	SPARE		20/1	-	A	2#12,#12G.,#12IG.,3/4"C.	20/1	600	SECURITY SYSTEM	20
21	TO-GO FAX MACHINE	800	20/1	2#12,#12G.,#12IG.,3/4"C.	B	2#12,#12G.,#12IG.,3/4"C.	20/1	600	SECURITY SYSTEM MONITORS	22
23	POWER CONDITIONER - OFFICE	500	20/1	2#12,#12G.,#12IG.,3/4"C.	C	2#12,#12G.,#12IG.,3/4"C.	20/1	600	SPRINKLER ALARM PANEL	24
25	FUTURE SECURITY DEVICE	500	20/1	2#12,#12G.,#12IG.,3/4"C.	A	2#12,#12G.,#12IG.,3/4"C.	20/1 GFI	200	KITCHEN DISPLAY SYSTEM (836J)	26
27	DVR	200	20/1	2#12,#12G.,#12IG.,3/4"C.	B	2#12,#12G.,#12IG.,3/4"C.	20/1 GFI	200	KITCHEN DISPLAY SYSTEM (836A)	28
29	RECEPTACLE - P.O.S. OFFICE	1000	20/1	2#12,#12G.,#12IG.,3/4"C.	C	2#12,#12G.,#12IG.,3/4"C.	20/1 GFI	200	KITCHEN DISPLAY SYSTEM (836B)	30
31	FILE SERVER RECEPTACLE - OFFICE	800	20/1	2#12,#12G.,#12IG.,3/4"C.	A	2#12,#12G.,#12IG.,3/4"C.	20/1 GFI	200	KITCHEN DISPLAY SYSTEM (836C)	32
33	RECEPTACLES - RSI CABLE PANEL	360	20/1	2#12,#12G.,#12IG.,3/4"C.	B	2#12,#12G.,#12IG.,3/4"C.	20/1 GFI	400	KITCHEN DISPLAY SYSTEM (836A)	34
35	NETWORK POS EQUIP. LOW VOLT XFMR	800	20/1	2#12,#12G.,#12IG.,3/4"C.	C	2#12,#12G.,#12IG.,3/4"C.	20/1	200	SERVICE BELL TRANSFORMER	36
37	CABLE EQUIPMENT LOW VOLTAGE XFMR	200	20/1	2#12,#12G.,#12IG.,3/4"C.	A	2#12,#12G.,#12IG.,3/4"C.	20/1	700	ATEX ALARM	38
39	TABLET AND Z10 CHARGERS	200	20/1	2#12,#12G.,#12IG.,3/4"C.	B	2#12,#12G.,#12IG.,3/4"C.	20/1 GFI	200	KITCHEN DISPLAY SYSTEM (836A)	40
41	RADIO CHARGERS	200	20/1	2#12,#12G.,#12IG.,3/4"C.	C	2#12,#12G.,#12IG.,3/4"C.	20/1	200	RECEPTACLE - P.O.S. BAR (410F)	42

NOTES:
1 NEMA 1 ENCLOSURE
2 PROVIDE BOLT ON BREAKERS

LOAD SUMMARY	CONN	NEC	DEM	LOAD BALANCE PER PHASE		
1-LIGHTING	1200	1.25	1500	PHASE A		6300
2-RECEPTACLES	17060	NEC	13530	PHASE B		5960
3-KITCHEN	0	0.65	0	PHASE C		6200
4-HVAC	0	1	0	LOWEST PHASE PLUS 10%		
5-NON-CONT	1200	1	1200	5960	+ 10%	6556
LARGEST MOTOR	0	0.25	0	PHASES ARE BALANCED		
TOTAL VA	19460		16230			
TOTAL AMPS	54.0		45.1			

PROVIDE ALUMINUM FEEDERS FOR ALL SECONDARY FEEDERS FROM THE MAIN PANEL MDP TO EACH INDIVIDUAL PANEL.

NOTE:
SHORT-CIRCUIT CALCULATIONS ARE BASED ON AN ESTIMATED 300KVA UTILITY TRANSFORMER AT 1.1% IMPEDANCE. CONTRACTOR SHALL VERIFY ACTUAL AVAILABLE FAULT CURRENT AND NOTIFY ENGINEER OF ANY DISCREPANCIES PRIOR TO EQUIPMENT ORDER.

MAIN PANEL: MP 1000 MCB 120/ 208 V, 3PH, 4W.+GRND. FAULT AT PANEL= 23891 65,000 AIC FULLY RATED

CCT	SERVES	VA	OCP	WIRE	PHASE	WIRE	OCP	VA	SERVES	CCT
1	PANEL L	10481	125/3	4#2/0(AL),#6G.,2"C.	A	4#250(AL),#6G.,2-1/2"C.	200/3	19459	PANEL M	2
-	---	10194	-	---	B	---	-	18429	---	-
-	---	10377	-	---	C	---	-	20311	---	-
3	SPACE		-	---	A	4#250(AL),#6G.,2-1/2"C.	200/3	24498	PANEL A	4
	---		-	---	B	---	-	23894	---	-
-	---		-	---	C	---	-	23746	SHUNT TRIP DEVICE	-
5	PANEL K	30251	225/3	4#300(AL),#4G.,3"C.	A	4#3(AL),#10G.,#10IG., 1-1/4"C.	60/3	6300	PANEL C	6
-	---	29720	-	---	B	---	-	5960	---	-
-	---	28598	-	---	C	---		6200	---	-
7	ROOFTOP UNIT	8520	80/3	3#3,#8G.,1"C.	A	3#3,#8G.,1"C.	80/3	8520	ROOFTOP UNIT	8
-	RTU-1	8520	-	---	B	---	-	8520	RTU-2	-
-	HACR	8520	-	---	C	---	-	8520	HACR	-
9	ROOFTOP UNIT	8520	80/3	3#3,#8G.,1"C.	A	3#6, #10G-3/4"C.	50/3	5304	MUA-1	10
-	RTU-3	8520	-	---	B	---	-	5304	-	-
-	HACR	8520	-	---	C	---	-	5304	-	-
11	SPACE		-	---	A	---	S/T		SHUNT TRIP S	12
-	---		-	---	B	---	-		SPACE	-
-	---		-	---	C	---	-		---	-
13	SPACE		-	---	A	---	-		SPACE	14
-	---		-	---	B	---	-		---	-
-	---		-	---	C	---	-		---	-
15	SPACE		-	---	A	---	-		SPACE	16
-	---		-	---	B	---	-		---	-
-	---		-	---	C	---	-		---	-

NOTES:
1 NEMA 3R ENCLOSURE
2 PROVIDE BOLT ON BREAKERS
3 PROVIDE "LOCK OUT-TAG OUT" FOR CIRCUITS NOTED.

LOAD SUMMARY	CONN	NEC	DEM	LOAD BALANCE PER PHASE		
1-LIGHTING	23123	1.25	28903.75	PHASE A		127157
2-RECEPTACLES	26500	NEC	18250	PHASE B		124365
3-KITCHEN	154967	0.65	100728.6	PHASE C		125400
4-HVAC	92136	1	92136	LOWEST PHASE PLUS 10%		
5-NON-CONT	62846	1	62846	124365	+ 10%	136802
LARGEST MOTOR	0	0.25	0	PHASES ARE BALANCED		
TOTAL VA	359572		302864.3			
TOTAL AMPS	998.1		840.7			

PANEL: M 225A MLO 120/ 208 V, 3PH, 4W.+GRND. FAULT AT PANEL= 12038 22,000 AIC FULLY RATED

CCT	SERVES	VA	OCP	WIRE	PHASE	WIRE	OCP	VA	SERVES	CCT
1	COOLER REFRIG. RACK (002C)	2712	30/3	3#10,#10G.,3/4"C.	A	-	20/1			2
3	---	2712	-	---	B	2#12,#12G.,3/4"C.	20/1	1500	HOOD CONTROL PANEL	4
5	---	2712	-	---	C	-	20/1		SPARE	6
7	FREEZER REFRIG. RACK (002D)	1776	20/3	3#12,#12G.,3/4"C	A	-	20/1		SPARE	8
9	---	1776	-	---	B	-	20/1		SPARE	10
11	---	1776	-	---	C	---	20/1		SPARE	12
13	ICE MACHINE COMPRESSOR (004B)	1800	25/3	3#10,#10G.,3/4"C	A	---	20/1		SPARE	14
15	---	1800	-	---	B	---	20/1		SPARE	16
17	---	1800	-	---	C	-	20/1		SPARE	18
19	SPARE		20/1	-	A	2#12,#12G.,3/4"C.	15/1	1176	DISHWASH EXHAUST FAN DEF-1	20
21	HEATER RH-1	1000	20/3	3#12,#12G.,3/4"C.	B	-	20/1		SPARE	22
23	---	1000	-	---	C	2#10,#10G.,3/4"C.	25/1	1725	KITCHEN EXHAUST FAN KEF-2	24
25	---	1000	-	---	A	2#12,#12G.,3/4"C.	15/1	1176	KITCHEN EXHAUST FAN KEF-3	26
27	SPACE		-	---	B	---	20/1		SPARE	28
29	SPACE		-	---	C	3#12,#12G.,3/4"C.	20/3	1667	ELECTRIC UNIT HEATER EUH-1	30
31	SPACE		-	---	A	---	-	1667	---	32
33	FREEZER EVAP COIL AND HTR (002F)	998	20/2	2#12,#12G.,3/4"C.	B	---	-	1667	---	34
35	---	988	-	---	C	3#4,#10G.,1"C.	60/3	5850	DISHMACHINE (3000)	36
37	KITCHEN EXHAUST FAN KEF-1	1126	15/3	3#12,#12G.,3/4"C	A	---	-	5850	(SEE NOTE 3)	38
39	---	1126	-	---	B	---	-	5850	---	40
41	---	1126	-	---	C	---	20/1		SPARE	42

NOTES:
1 NEMA 1 ENCLOSURE
2 PROVIDE BOLT ON BREAKERS
3 PROVIDE "LOCK OUT-TAG OUT" FOR CIRCUITS NOTED.

LOAD SUMMARY	CONN	NEC	DEM	LOAD BALANCE PER PHASE		
1-LIGHTING	0	1.25	0	PHASE A		19459
2-RECEPTACLES	0	NEC	0	PHASE B		18429
3-KITCHEN	1986	0.65	1290.9	PHASE C		20311
4-HVAC	15456	1	15456	LOWEST PHASE PLUS 10%		
5-NON-CONT	37914	1	37914	18429	+ 10%	20271.9
LARGEST MOTOR	0	0.25	0	REBALANCE LOADS		
TOTAL VA	55356		54660.9			
TOTAL AMPS	153.7		151.7			

PANEL: L 225A MLO 120/ 208 V, 3PH, 4W.+GRND. FAULT AT PANEL= 8979 10,000 AIC SERIES RATED

CCT	SERVES	VA	OCP	WIRE	PHASE	WIRE	OCP	VA	SERVES	CCT
1	LIGHTING - BAR / DINING	63	20/1 SB	2#12,#12G.,3/4"C.	A	2#12,#12G.,3/4"C.	20/1	1920	LAWN IRRIGATION CONTROLLER	2
3	LIGHTING - ART WALL WASH/RR VEST	308	20/1 SB	2#12,#12G.,3/4"C.	B	2#12,#12G.,3/4"C.	20/1	1200	TIMECLOCK / CONTACTORS	4
5	LIGHTING - RESTROOMS / TEF-1	874	15/1	2#12,#12G.,3/4"C.	C	2#12,#12G.,3/4"C.	20/1 SB	210	LIGHTING - ENTRY/DINING	6
7	LIGHTING - HOSTESS / ENTRY	174	20/1 SB	2#12,#12G.,3/4"C.	A	2#10,#10G.,1"C.	20/1 SB	1200	SITE SIGNAGE (CONTACTOR 2)	8
9	LIGHTING - KITCHEN (EM/NL)	800	20/1	2#12,#12G.,3/4"C.	B	2#12,#12G.,3/4"C.	20/1 SB	1200	ROOF SIGNAGE (CONTACTOR 2)	10
11	SPARE		20/1	---	C	2#8,#10G.,1"C.	20/2 SB	315	PARKING LOT LIGHTING (CONTACTOR 3)	12
13	LIGHTING - DINING TRACK	594	20/1 SB	2#12,#12G.,3/4"C.	A	---	-	315	---	14
15	LIGHTING - DINING (EM/NL)	161	20/1	2#12,#12G.,3/4"C.	B	2#8,#10G.,1"C.	20/2 SB	525	PARKING LOT LIGHTING (CONTACTOR 3)	16
17	ROOF SIGNAGE (CONTACTOR 2)	1800	20/1 SB	2#12,#12G.,3/4"C.	C	---	-	525	---	18
19	ROOF SIGNAGE (CONTACTOR 2)	1200	20/1 SB	2#12,#12G.,3/4"C.	A	2#12,#12G.,3/4"C.	20/1 SB	450	LIGHTING - ROOF (CONTACTOR 2)	20
21	LIGHTING - EXTERIOR (CONTACTOR 2)	1000	20/1 SB	2#12,#12G.,3/4"C.	B	2#12,#12G.,3/4"C.	20/1 SB	300	LIGHTING - ROOF (CONTACTOR 2)	22
23	ROOF SIGNAGE (CONTACTOR 2)	1800	20/1 SB	2#12,#12G.,3/4"C	C	2#12,#12G.,3/4"C.	20/1 SB	153	LIGHTING - CANOPY (CONTACTOR 4)	24
25	OFFICE POWER STRIP	600	20/1	2#12,#12G.,3/4"C	A	2#12,#12G.,3/4"C.	20/1 SB	525	LIGHTING - SERVICE YARD (CONTACTOR 4)	26
27	OFFICE POWER STRIP	600	20/1	2#12,#12G.,3/4"C	B	2#12,#12G.,3/4"C.	20/1	900	RECEPTACLES - ROOFTOP	28
29	WATER HEATERS WH-1 & 2 CONTROLS	300	20/1	2#12,#12G.,3/4"C	C	2#12,#12G.,3/4"C.	20/1 SB	1800	ROOF SIGNAGE (CONTACTOR 2)	30
31	BAR USB RECEPTACLES	1440	20/1	2#12,#12G.,3/4"C.	A	---	20/1		SPARE	32
33	WATER SOFTNER CONTROLS	200	20/1	2#12,#12G.,3/4"C.	B	2#12,#12G.,3/4"C.	20/1	600	BACKFLOW PREVENTOR - HEAT TRACE	34
35	DINING AREA USB RECEPTACLES	1260	20/1	2#12,#12G.,3/4"C.	C	2#12,#12G.,3/4"C.	20/1	800	FLOOR FAN - OFFICE	36
37	SITE SIGNAGE (CONTACTOR 2)	1200	20/1 SB	2#10,#10G.,1"C.	A	2#12,#12G.,3/4"C.	20/1	800	FLOOR FAN - KITCHEN	38
39	SITE SIGNAGE (CONTACTOR 2)	1200	20/1 SB	2#10,#10G.,1"C.	B	2#12,#12G.,3/4"C.	20/1	1200	RECEPTACLES - CONVENIENCE	40
41	SPARE		20/1	---	C	2#12,#12G.,3/4"C.	20/1 GFI	540	RECEPTACLES - ROOFTOP	42

NOTES:
1 NEMA 1 ENCLOSURE
2 PROVIDE BOLT ON BREAKERS

LOAD SUMMARY	CONN	NEC	DEM	LOAD BALANCE PER PHASE		
1-LIGHTING	18989	1.25	23736.25	PHASE A		10481
2-RECEPTACLES	6540	NEC	6540	PHASE B		10194
3-KITCHEN	0	0.65	0	PHASE C		10377
4-HVAC	0	1	0	LOWEST PHASE PLUS 10%		
5-NON-CONT	5820	1	5820	10194	+ 10%	11213.4
LARGEST MOTOR	0	0.25	0	PHASES ARE BALANCED		
TOTAL VA	31349		36096.25			
TOTAL AMPS	87.0		100.2			

FAULT CURRENT CALCULATION - 208V

SERVICE VOLTAGE 120/ 208
UTILITY FAULT CURRENT [ ] AMPHERES

KVA = 300
E = 360.256
TRANS. FLA = 833

$I = \frac{kVA \times 1000}{E_{L-L} \times 1.732} =$

$Isca = \frac{TRANS.\ FLA \times 100}{TRANSFORMER\ Z} =$ 83274

TRANSFORMER Z = 2.5 %

Isca = AMPERE SHORT-CIRCUIT CURRENT RMS SYMMETRICAL.

Isca = 33,310 AMPERES (A)

FAULT AT:		MP	L	M	A	K	C	RTU-1	RTU-2	RTU-3	CU-1	CU-2
LENGTH (DISTANCE)	L=	100	60	60	60	60	60	30	40	30	30	30
AVAILABLE SHORT CIRCUIT	Isca=	33310	23891	23891	23891	23891	23891	23891	23891	23891	23891	23891
NO. CONDUCTORS PER PHASE	N=	3	1	1	1	1	1	1	1	1	1	1
PHASE CONDUCTOR		600	2/0	250	250	300	3	2	2	2	10	10
PHASE CONDUCTOR CONSTANT	C=	23451	7187	12122	12122	13910	2876	5907	5907	5907	599	599
VOLT - LINE TO LINE	EL-L=	208	208	208	208	208	208	208	208	208	208	208
F FACTOR=1.732xLxI / NxCxE L-L	F=	0.394	1.661	0.985	0.985	0.858	4.150	1.010	1.347	1.010	9.969	9.969
MUTILPLIER = 1 / 1+F	M=	0.717	0.376	0.504	0.504	0.538	0.194	0.497	0.426	0.497	0.091	0.091
Isca x M = FAULT CURRENT AT TERMINALS OF THE PANEL LINE-LINE =		23891	8979	12038	12038	12857	4639	11884	10179	11884	2178	2178
DESIGN POINT:		B	C	D	E	F	G	H	I	J	K	L

NOTES:
1. CONTRACTOR SHALL VERIFY ALL GROUND FAULT INFORMATION PRIOR TO START OF CONSTRUCTION. ANY DISCREPANCY SHALL BE REPORTED TO THE ENGINEER PRIOR TO ORDERING ANY EQUIPMENT.

GENERAL PLAN NOTES

A. INSTALL WORK SO AS TO BE READILY ACCESSIBLE FOR OPERATION, MAINTENANCE AND REPAIR, MINOR DEVIATIONS FROM THE DRAWINGS MAY BE MADE TO ACCOMPLISH THIS, BUT CHANGES WHICH INVOLVE EXTRA COST SHALL NOT BE MADE WITHOUT APPROVAL.

B. REFER TO ARCHITECTURAL SPECIFICATIONS AND NOTES FOR CUTTING, TRENCHING AND PATCHING. PAINT ALL CONDUIT AND DEVICES EXPOSED TO PUBLIC PER ARCHITECTURAL PLANS OR TO MATCH ADJACENT BUILDING SURFACE, UNLESS NOTED OTHERWISE.

C. CONTRACTORS SHALL COLLECT AND FURNISH TO OWNER ALL OPERATIONS AND MAINTENANCE MANUALS FOR INSTALLED EQUIPMENT AS WELL AS WARRANTIES AND GUARANTEES FOR SAME. TURN OVER PRIOR TO FINAL PAYMENT.

D. UPON COMPLETION OF WORK, PRIOR TO APPLYING FOR FINAL PAYMENT THOROUGHLY CLEAN ALL EXPOSED PORTIONS OF ELECTRICAL EQUIPMENT AND TOUCH UP PAINT WHERE NECESSARY. FOLLOW MANUFACTURER'S RECOMMENDATIONS FOR CLEANING.

E. ALL INFORMATION INDICATED ON THESE DRAWINGS HAS BEEN OBTAINED FROM EXISTING PLANS, REPORTS, AND PHOTOS FROM OTHERS, AND/OR FROM SITE SURVEYS. THE CONTRACTOR SHALL FIELD VERIFY AND COORDINATE ALL WORK SHOWN ON THESE DRAWINGS WITH EXISTING CONDITIONS, PRIOR TO BEGINNING WORK OR ORDERING EQUIPMENT AND MATERIAL.

ENGINEER:
BRIAN E. CHANDLER, PE
6201 CAMPUS CIRCLE DRIVE E.
IRVING, TEXAS 75038
TEL: 972.870.1288
WWW.IDSTUDIO4.COM
E-MAIL: bchandler@idstudio4.com

CORPORATE:
BRINKER RESTAURANT CORPORATION, A VIRGINIA CORPORATION
3000 OLYMPUS BLVD.
DALLAS, TEXAS 75019
972.980.9917
www.brinker.com

09/23/2024
ISSUE FOR BID
THESE DOCUMENTS ARE FOR BIDDING PURPOSES ONLY. DO NOT USE FOR CONSTRUCTION.

RESTAURANT #CH1679
PROTOTYPE 18.5FS

CHILI'S TOOELE
951 N MAIN STREET
TOOELE, UT 84074

CLIENT: BRINKER RESTAURANT, CORP. A VIRGINIA CORPORATION

DATE	DESCRIPTION
6/27/2024	ISSUE FOR PERMIT
9/23/2024	ISSUE FOR BID

#	DATE	DESCRIPTION
2	08.23.2024	OWNER COMMENTS

PROJECT NUMBER:
CHI24007

SHEET TITLE:
ELECTRICAL SCHEDULES

SHEET NUMBER:
E301

SECURITY SYSTEM PLAN KEYED NOTES

#	
1.	INSTALL POTTER HOLD-UP BUTTON (H) ON WALL IN MANAGER'S OFFICE UNDER DESK.
2.	MOUNT OUTDOOR SECURITY SIREN/STROBE AT SIDE OF ENTRY TOWER 2'-6" ABOVE MAIN ROOF AND 24" FROM END OF WALL. SIREN SHALL BE TAMPER/WEATHER PROOF. REFER TO 'MEP101' FOR ROOF PLAN.
3.	DOOR CONTACT (D), INSTALLED BY "TYCO", SHALL BE RECESSED DOOR FRAME CONTACT LOCATED AT CENTER DOOR HEAD. 1/2" CONDUIT, BY GC, STUBBED DOWN THROUGH DOOR JAMB AND TURNED OUT OF WALL 6" ABOVE CEILING OR TURNED OUT OF WALL AT HEIGHT OF CEILING JOIST WHERE THERE IS EXPOSED CEILING.
4.	MOUNT COOLER/FREEZER PANIC BUTTON (PB) ON THE HINGE SIDE OF THE DOOR TO CONCEAL ALL CONDUITS. MOUNT 36" HIGH AND 6" FROM DOOR FRAME, CONDUIT TO BE SURFACE MOUNTED. ELECTRICAL CONTRACTOR SHALL SUPPLY J-BOX AND CONDUIT FOR EACH LOCATION. COORDINATE WITH SECURITY VENDOR FOR ADDITIONAL INSTALLATION REQUIREMENTS.
5.	SECURITY CONTROL PANEL (SEC) SHALL BE WALL-MOUNTED TIGHTLY AGAINST CEILING.
6.	KEYPAD SHALL BE INSTALLED NEXT TO THE OFFICE DOOR TO ARM/DISARM SECURITY SYSTEM 60" AF.F. NOTE: IF FIRE MARSHALL REQUIRES A KEYPAD AT THE FRONT DOOR, PROVIDE ADDITIONAL KEYPAD FOR ANNUNCIATION ONLY. IT SHALL NOT TO BE USED TO ARM/DISARM SECURITY SYSTEM.
7.	MOUNT MOTION DETECTOR IN STORAGE SHED SO THAT IT IS COVING THE TELEPHONE DEMARCATION. USE THE 2" UNDERGROUND TELEPHONE CONDUIT TO PULL WIRE FOR BOTH MOTION AND DOOR CONTACT. IF PULL STRING IS USED, REPLACE FOR TELEPHONE VENDOR.
8.	360 DEGREE MOTION DETECTOR. MOUNT ON WALL WITHIN CORRIDOR AT 8'-0" ABOVE FINISHED FLOOR.
9.	DETEX ALARM BOX (DTX), INSTALLED BY LOCKSMITH, GC TO MOUNT DOUBLE GANG BACK BOX 60" AFF MEASURED TO THE TOP OF BOX. EXTEND CONDUIT TO 6" ABOVE CEILING AND TURN OUT OF WALL. REF. DETAIL 03, THIS SHEET, FOR MORE INFORMATION.
10.	INNER BACK DOOR CONTACT - TECH TO INSTALL A 1" DPDT CONTACT INTO THE BACK DOOR (DOOR GOING OUT OF THE KITCHEN INTO CHAIN LINK SECURITY CAGE). CONTACT SHALL BE NORMALLY OPEN FOR THE CUSTOMER'S LOCAL DETEX BACK DOOR ALARM (INSTALLED BY OTHERS). COIL 20 FEET OF WIRE ABOVE BACK DOOR FOR CUSTOMER'S LOCAL DETEX BACK DOOR ALARM. THE SECOND LEG (NORMALLY CLOSED) OF THE DPDT CONTACT IS CONNECTED TO THE ALARM PANEL FOR MONITORING PURPOSES. ONLY INSTALL THE DPDT ON DOOR GOING OUT OF KITCHEN INTO THE CHAIN LINK SECURITY CAGE.

SECURITY SYSTEM PLAN GENERAL NOTES

#	
A.	VERIFY LOCATION, LAYOUT, AND ALL SYSTEM COMPONENTS WITH SECURITY CONSULTANT.
B.	ELECTRICAL CONTRACTOR IS RESPONSIBLE FOR FIELD VERIFICATION OF ALL CONDITIONS AND IS ALSO RESPONSIBLE FOR REPORTING ANY CONFLICTS TO THE ENGINEER PRIOR TO THE START OF WORK.
C.	ELECTRICAL CONTRACTOR SHALL FURNISH AND INSTALL ALL REQUIRED CONDUIT AND BACKBOXES PER SECURITY PLAN. ALL EXPOSED CABLE/CONDUIT SHALL BE FASTENED TO THE EXPOSED TRUSSES AND HIDDEN FROM VIEW.
D.	SEAL ALL CONDUITS ENTERING COOLERS AND FREEZERS AS PER N.E.C. ART.300.7 WITH APPROVED METHOD AND APPROVED MATERIALS.
E.	UNLESS NOTED OTHERWISE ALL WALL MOUNTED SECURITY EQUIPMENT SHALL BE INSTALLED WITH A BACK BOX AND 3/4" CONDUIT TURNED OUT OF WALL 6" ABOVE CEILING.

SECURITY SYSTEM SYMBOL LEGEND

SYMBOL	DESCRIPTION
KP	SECURITY KEYPAD
●	HOLD UP BUTTON
SEC	SECURITY CONTROL PANEL
D	DOOR CONTACT
MON	SECURITY MONITOR
▭◀	CCTV
PB	PANIC BUTTON
▶S	SIREN/STROBE DEVICE
Ⓜ	MOTION SENSOR
DT	DETEX ALARM

NOTE: NOT ALL SYMBOLS MAY APPEAR ON DRAWINGS.

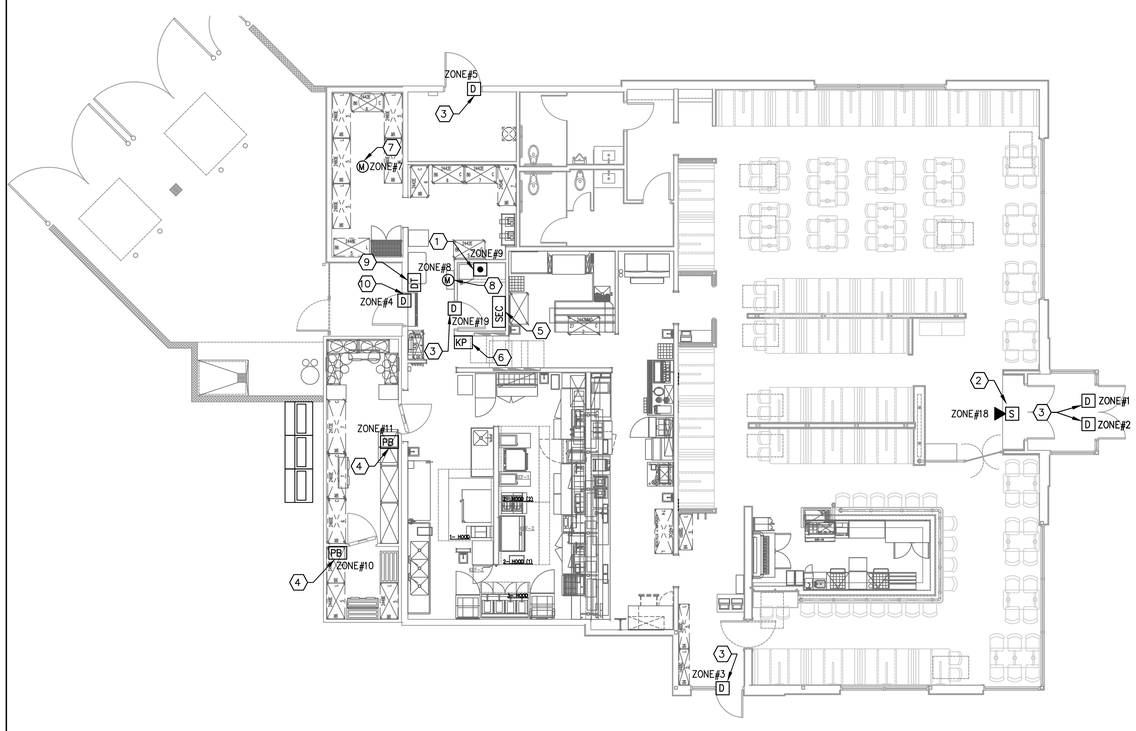

NOTE:
REFER TO SHEET 'E102' FOR POWER TO ALL EQUIPMENT SHOWN ON THIS PLAN. REFER TO SHEET 'E202' FOR ENLARGED OFFICE PLAN.

SECURITY SYSTEM PLAN
1/8"=1'-0"
1

SPRINKLER MONITORING SYSTEM PLAN KEYED NOTES

#	
1.	SPRINKLER MONITOR CONTROL PANEL 'SMCP'. BACKBOX FURNISHED BY VENDOR AND INSTALLED BY ELECTRICAL CONTRACTOR. REFER TO 'E102' AND TO SHEET 'E202' FOR CIRCUITING AND ADDITIONAL INFORMATION.
2.	CONNECT TO OWNER SUPPLIED DUCT SMOKE DETECTORS. LOCATE CENTERED ON JOIST. COORDINATE WITH STRUCTURE.
3.	MANUAL PULL STATIONS SHOULD NOT BE MOUNTED MORE THAN 48" AFF. PROVIDE BACKBOX AND CONDUIT TO A.F.C. (TYPICAL)
4.	WEATHERPROOF BACKBOX BY VENDOR INSTALLED BY CONTRACTOR.
5.	CONNECT TO OWNER SUPPLIED HOOD ANSUL SYSTEM (FF).
6.	CONNECT TO OWNER SUPPLIED TAMPER SWITCH & FLOW SWITCH (FS/TS).
7.	INSTALL AND CONNECT CEILING MOUNT SMOKE DETECTOR IN MANAGER'S OFFICE ABOVE SMCP.
8.	SPRINKLER MONITOR ANNUNCIATOR PANEL 'SMAP'. MOUNT AT 48" ABOVE FINISHED FLOOR. BACKBOX FURNISHED BY VENDOR AND INSTALLED BY ELECTRICAL CONTRACTOR. REFER TO 'E102' AND TO SHEET 'E202' FOR CIRCUITING AND ADDITIONAL INFORMATION.

SPRINKLER MONITORING SYSTEM SYMBOL LEGEND

SYMBOL	DESCRIPTION
SMCP	SPRINKLER MONITORING CONTROL PANEL
SMAP	SPRINKLER MONITORING ANNUNCIATOR PANEL
F	MANUAL PULL STATION
▷X	SPRINKLER MONITORING HORN/STROBE DEVICE
?	CEILING MOUNTED SMOKE DETECTOR
-?	DUCT MOUNTED SMOKE DETECTOR
AP	ANSUL PULL STATION
TS	TAMPER SWITCH
FS	WATER FLOW SWITCH

NOTE: NOT ALL SYMBOLS MAY APPEAR ON DRAWINGS.

SPRINKLER MONITORING SYSTEM PLAN GENERAL NOTES

A.	SPRINKLER MONITORING SYSTEM SHALL BE FIRE LITE MS-10-UD-7. DESIGNED AND INSTALLED BY CERTIFIED ENGINEER/DESIGNER. CONTRACTOR SHALL PROVIDE THIS WORK AS A PART OF HIS CONTRACT. CONTRACTOR SHALL SUBMIT FOR APPROVAL TO THE LOCAL BUILDING REVIEW AUTHORITIES A COMPLETE SET OF DRAWINGS DEPICTING ALL SPRINKLER MONITORING SYSTEM COMPONENTS AND PROVIDE A COPY OF AUTHORITY APPROVED DRAWINGS TO THE OWNER.
B.	SPRINKLER MONITORING ANNUNCIATOR 'SMCP, PROVIDE THREE GANG BOX 60" AFF.
C.	SPRINKLER SYSTEMS FLOW SWITCH, PROVIDE 4" SQUARE BOX 60" A.F.F.. PROVIDE 6'-0" WHIP WITH SEAL TIGHT CONDUIT FROM WALL MOUNTED BOX TO DEVICE.
D.	SPRINKLER SYSTEMS TAMPER SWITCH, PROVIDE 4" SQUARE BOX 60" A.F.F.. PROVIDE 6'-0" WHIP WITH SEAL TIGHT CONDUIT FROM WALL MOUNTED BOX TO DEVICE.
E.	MANUAL PULL STATIONS, PROVIDE SINGLE 4" SQUARE BOX WITH SINGLE GANG MUDRING. WALL MOUNTED, TOP OF BOX 48" AFF.
F.	HORN/STROBES, PROVIDE 4" SQUARE DEEP BACK BOX.
G.	CEILING MOUNTED SMOKE DETECTOR, PROVIDE 4" OCTAGON BOX.
H.	SPRINKLER MONITORING WIRING SHALL BE PROVIDED WITH RED INSULATION AND ROUTED IN CONDUIT AT VERTICAL RUNS IN WALLS. ALL EXPOSED CONDUCTOR SHALL BE PLENUM RATED.
I.	REFER TO MECHANICAL DRAWINGS FOR ADDITIONAL LOCATIONS OF DUCT SMOKE DETECTORS.
J.	IF ADDITIONAL AUDIO/VISUAL STROBES ARE REQUIRED BY AHJ THEN REQUEST OWNER PREFERRED LAYOUT AND COORDINATE ALL REQUIREMENTS WITH LOCAL AUTHORITY HAVING JURISDICTION. WHERE ADDITIONAL DEVICES ARE PROVIDED, AUDIO/VISUAL STROBES SHOULD BE SYNCHRONIZED AND PLACED 80" ABOVE THE HIGHEST FLOOR LEVEL WITHIN THE SPACE OR 6" BELOW THE CEILING, WHICH EVER IS CLOSER TO THE FLOOR. DO NOT PLACE CLOSER THAN 6" FROM DOOR OPENINGS. PROVIDE BACKBOX AND 3/4 "CONDUIT TO A.F.C.

	PERIMETER PARTITION	NO.	PERIMETER DECRIPTION
SECURITY SYSTEM PLAN	ZONE	1	LEFT FRONT DOOR
	ZONE	2	RIGHT FRONT DOOR
	ZONE	3	TO-GO DOOR
	ZONE	4	BACK DOOR
	ZONE	5	MECH ROOM DOORS
	ZONE	6	SHED DOOR
	ZONE	7	SHED MOTION
	ZONE	8	KITCHEN MOTION
	ZONE	9	OFFICE HOLD-UP
	ZONE	10	FREEZER HOLD-UP
	ZONE	11	COOLER HOLD-UP
	ZONE	12	BEER COOLER HOLD-UP
	ZONE	13	WIRELESS PENDANT 1
	ZONE	14	WIRELESS PENDANT 2
	ZONE	15	WIRELESS PENDANT 3
	ZONE	16	WIRELESS PENDANT 4
	ZONE	17	WIRELESS PENDANT 5
	ZONE	18	SIREN TAMPER
	OFFICE PARTITION	NO.	ZONE DECRIPTION
	ZONE	19	OFFICE DOOR

	PERIMETER PARTITION	NO.	PERIMETER DECRIPTION
SPRINKLER MONITORING SYSTEM PLAN	ZONE	1	MANUAL PULL
	ZONE	2	OFFICE SMOKE
	ZONE	3	ANSUL 1
	ZONE	4	NOT USED
	ZONE	5	DUCT DETECTOR RTU-1
	ZONE	6	DUCT DETECTOR RTU-2
	ZONE	7	DUCT DETECTOR RTU-3
	ZONE	8	WATER FLOW
	ZONE	9	TAMPER

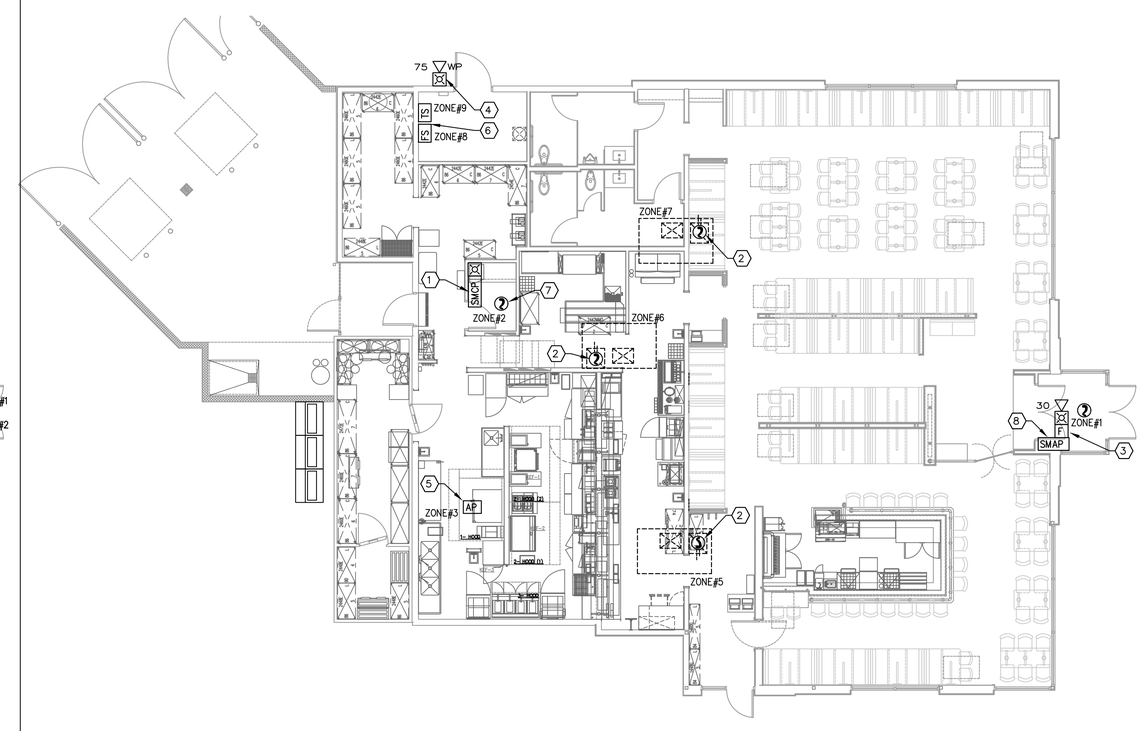

NOTE:
REFER TO SHEET 'E102' FOR POWER TO ALL EQUIPMENT SHOWN ON THIS PLAN. REFER TO SHEET 'E202' FOR ENLARGED OFFICE PLAN.

SPRINKLER MONITORING SYSTEM PLAN
1/8"=1'-0"
2

ENGINEER:

BRIAN E. CHANDLER, PE

6201 CAMPUS CIRCLE DRIVE E.
IRVING, TEXAS 75038
TEL: 972.870.1288
WWW.IDSTUDIO4.COM
E-MAIL: bchandler@idstudio4.com

CORPORATE:
BRINKER RESTAURANT CORPORATION,
A VIRGINIA CORPORATION
3000 OLYMPUS BLVD.
DALLAS, TEXAS 75019
972.980.9917
www.brinker.com

09/23/2024
ISSUE FOR BID
THESE DOCUMENTS ARE FOR BIDDING PURPOSES ONLY. DO NOT USE FOR CONSTRUCTION.

RESTAURANT #CH1679
PROTOTYPE 18.5FS

CHILI'S TOOELE
951 N MAIN STREET
TOOELE, UT 84074

CLIENT: BRINKER RESTAURANT CORP.
A VIRGINIA CORPORATION

DATE	DESCRIPTION
6/27/2024	ISSUE FOR PERMIT
9/23/2024	ISSUE FOR BID

	DATE	DESCRIPTION

PROJECT NUMBER:
CHI24007

SHEET TITLE:
FIRE ALARM / SPRINKLER MONITORING SYSTEM PLANS

SHEET NUMBER:
T101

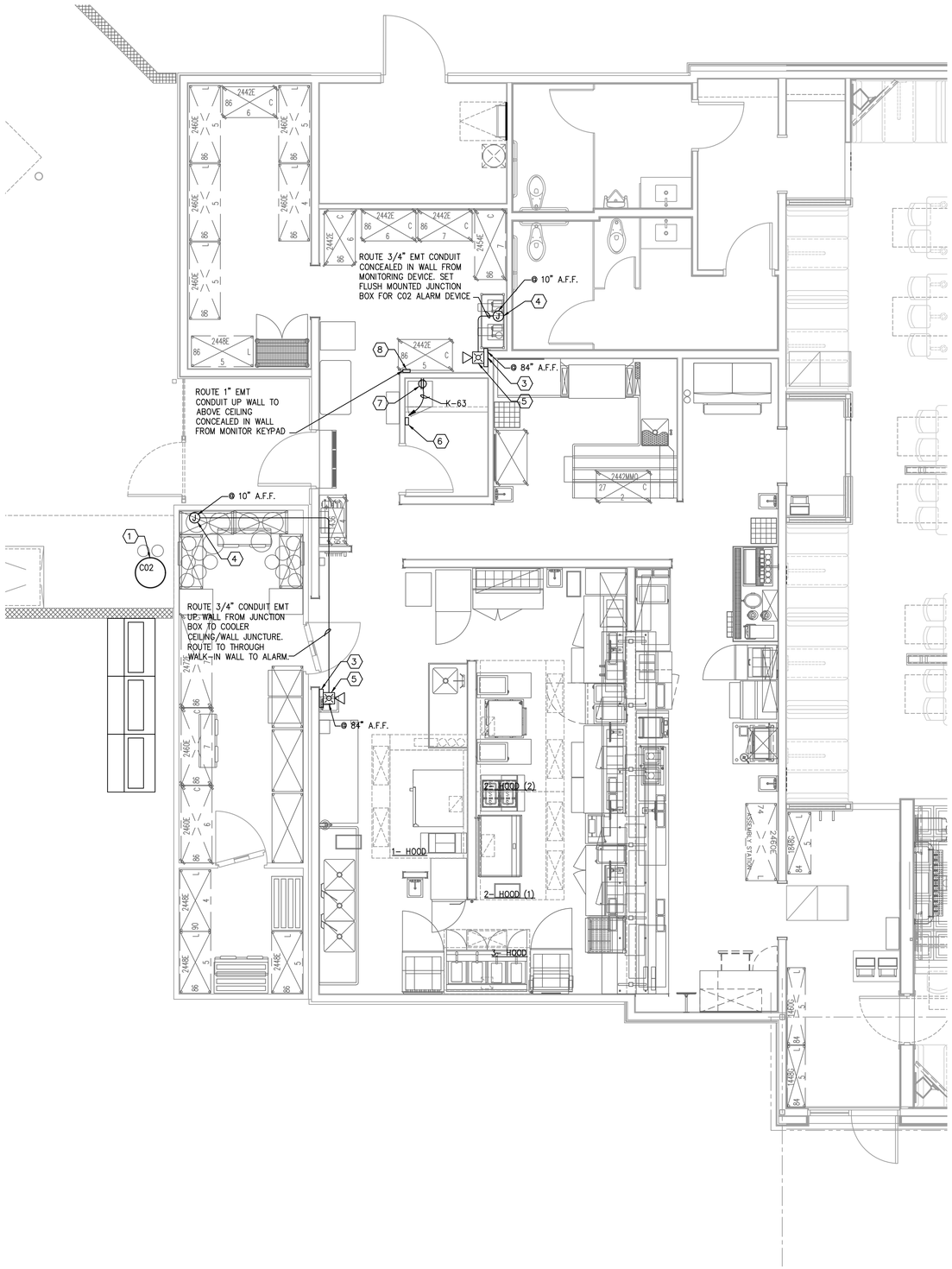

C02 SYSTEMS PLAN
1/4"=1'-0"
1

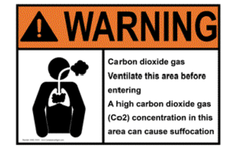

PROVIDE SIGNAGE FOR C02 TANK. SIGN AVAILABLE AT HTTP://WWW.COMPLIANCESIGNS.COM/NUCO2.SHTML

C02 SIGNAGE
NOT TO SCALE
2

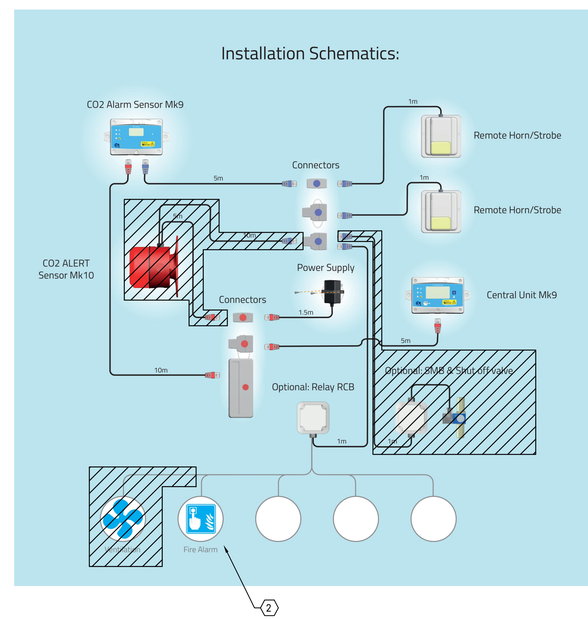

(ALL DEVICES MAY NOT BE USED)

C02 SYSTEMS SCHEMATIC
NO SCALE
3

KEYED NOTES

#	
1.	C02 TANK. TANK SHALL BE INSTALLED IN ACCORDANCE WITH MANUFACTURER'S REQUIREMENTS AND RECOMMENDATIONS. PROVIDE EMERGENCY SHUT-OFF VALVE ON SUPPLY LINE. TAG VALVE AND LINE IN ACCORDANCE WITH NFPA REQUIREMENTS.
2.	CONNECT OUTPUT FROM CENTRAL ALARM TO FIRE ALARM SYSTEM.
3.	PROVIDE WARNING SIGN IN ACCORDANCE WITH NFPA 55, SECTION 13.2.3.1. REFERENCE 2/T102.
4.	PROVIDE MK9-"ALL-IN-ONE" C02 SENSOR FROM LANCER. INSTALL SENSOR IN ACCORDANCE WITH MANUFACTURER'S REQUIREMENTS AT 12" A.F.F. IN C02 STORAGE AREA, WITHIN 1'-0" OF TANK. SENSOR FURNISHED AND INSTALLED BY OTHERS.
5.	VISUAL AND AUDIBLE ALARM (HORN/STROBE) MOUNTED ON WALL. PROVIDE SINGLE GANG JUNCTION BOX. HORN/STROBE DEVICE AND ASSOCIATED WIRING BY OTHERS.
6.	COORDINATE "EMERGENCY PROCEDURES" WITH OWNER AND POST A COPY IN OFFICE.
7.	SIMPLEX OUTLET AT 12" ABOVE FINISHED FLOOR FOR C02 MONITORING POWER SUPPLY BY ELECTRICIAN.
8.	CENTRAL UNIT MK9 LOCATION AT 48" A.F.F.

C02 PIPING NOTES

A.	INSTALLATION SHALL BE IN STRICT COMPLIANCE WITH 2013 NFPA 55, CHAPTER 13.
B.	PIPING AND FITTINGS SHALL BE LOCATED AND SUPPORTED TO PROTECT AGAINST DAMAGE.
C.	A C02 DETECTOR SYSTEM ALARM PERMIT SHALL BE REQUIRED.
D.	OWNER TO PROVIDE AND INSTALL ALL C02 LINES.

SEQUENCE OF OPERATION

A.	C02 SENSOR DETECTS C02 (IN EXCESS OF 1.5% OR 1,000 PPM)
B.	THIS NOTIFIES MONITORING SYSTEM WHICH WILL ACTIVATE VISUAL AND AUDIBLE ALARM AT NORN/STROBE.
C.	"EMERGENCY PLAN" WILL BE INITIATED BY STAFF AND AREA WILL BE EVACUATED.

REQUIRED TESTING

A.	INSTALLING CONTRACTOR SHALL TEST THE DETECTOR IN ACCORDANCE WITH THE MANUFACTURER'S TESTING REQUIREMENTS TO VERIFY DETECTOR AND ALARMS ARE IN PROPER OPERATING ORDER.
B.	PROVIDE REPORT TO AUTHORITY HAVING JURISDICTION THAT THE SYSTEM IS INSTALLED AND WORKING PROPERLY

MANUFACTURER CONTACT

REGIONAL SALES MANAGER
ADVANCED BEVERAGE SOLUTIONS/LANCER
HARVEY PAGE

270-392-8986

ENGINEER:

BRIAN E. CHANDLER, PE

6201 CAMPUS CIRCLE DRIVE E.
IRVING, TEXAS 75038
TEL: 972.870.1288
WWW.IDSTUDIO4.COM
E-MAIL: bchandler@idstudio4.com

CORPORATE:
BRINKER RESTAURANT CORPORATION, A VIRGINIA CORPORATION
3000 OLYMPUS BLVD.
DALLAS, TEXAS 75019
972.980.9917
www.brinker.com

09/23/2024
ISSUE FOR BID
THESE DOCUMENTS ARE FOR BIDDING PURPOSES ONLY. DO NOT USE FOR CONSTRUCTION.

RESTAURANT #CH1679
PROTOTYPE 18.5FS

CHILI'S TOOELE
951 N MAIN STREET
TOOELE, UT 84074

CLIENT: BRINKER RESTAURANT CORP. A VIRGINIA CORPORATION

DATE	DESCRIPTION
6/27/2024	ISSUE FOR PERMIT
9/23/2024	ISSUE FOR BID

	DATE	DESCRIPTION

PROJECT NUMBER:
CHI24007

SHEET TITLE:
C02 SYSTEMS PLAN

SHEET NUMBER:
T102

CHILI'S SPECIFICATIONS - PROTOYPE 18.5F

TABLE OF CONTENTS

Division 0 - Contract and Bid Information
Section 00100 - Instructions to Bidders
Section 00300 - Bid Form
Section 00700 - General Conditions

Division 1 - Scope of Work and Procedures
Section 01100 - Summary of Work
Section 01110 - Work Covered by Contract Documents
Section 01150 - Alternates / Alternatives
Section 01300 - Administrative Requirements
Section 01312 - On Line Project Management
Section 01400 - Quality Requirements
Section 01500 - Temporary Facilities and Controls
Section 01580 - Project Identification Signs
Section 01600 - Product Requirements
Section 01700 - Execution Requirements
Section 01720 - Construction Layout
Section 01780 - Closeout Submittals

Division 2 - Site Construction
*Refer to Civil Documents for balance of Site Construction Specifications
Section 02010 - Subsurface Investigation
Section 02100 - Site Clearing
Section 02200 - Excavation, Backfilling, Compaction, and Grading
Section 02361 - Termite Control
Section 02505 - Concrete Paving, Walks, Curbs, Gutters and Approaches
Section 02511 - Asphaltic Concrete Paving
Section 02580 - Pavement Marking
Section 02831 - Chain Link Fences and Gates
Section 02854 - Parking Bumpers (Wheel Stops)

Division 3 - Concrete
Section 03300 - Cast in Place Concrete

Division 4 - Masonry
Section 04220 - Concrete Unit Masonry
Section 04451 - Synthetic Stone Veneer
Section 04700 - Thin Brick Veneer

Division 5 - Metals
Section 05120 - Structural Steel
Section 05500 - Metal Fabrications

Division 6 - Wood and Plastics
Section 06100 - Rough Carpentry
Section 06160 - Sheathing (ZIP System)
Section 06170 - Laminated Veneer Structural Timber
Section 06172 - Glued-Laminated Structural Units
Section 06192 - Wood Chord Metal Trusses
Section 06200 - Finish Carpentry
Section 06410 - Custom Cabinets
Section 06610 - Quartz Surfacing

Division 7 - Thermal and Moisture Protection
Section 07212 - Board and Batt Insulation
Section 07240 - Exterior Insulation and Finish Systems
Section 07250 - Sill Sealer Gasket
Section 07260 - Weather Barriers
Section 07411 - Preformed Metal Roofing
Section 07460 - Fiber Cement Siding and Trim
Section 07530 - Elastomeric Membrane Roofing
Section 07620 - Sheet Metal Flashing and Trim
Section 07900 - Sealants and Caulking

Division 8 - Doors and Windows
Section 08110 - Steel Doors and Frames
Section 08111 - Flush Wood Doors
Section 08161 - Fiberglass Doors
Section 08212 - Wood Stile and Rail Doors
Section 08410 - Aluminum Entrances and Storefronts
Section 08710 - Door Hardware
Section 08800 - Glass and Glazing

Division 9 - Finishes
Section 09220 - Portland Cement Plaster (Stucco)
Section 09260 - Gypsum Board Assemblies
Section 09300 - Tile
Section 09511 - Suspended Acoustical Ceilings
Section 09660 - Resilient Plank Flooring
Section 09679 - Resilient Base
Section 09729 - Mural Installation
Section 09771 - Prefinished Panels
Section 09900 - Paints and Coatings
Section 09940 - Duct Liner

Division 10 - Specialties
Section 10172 - Stainless Steel Toilet Compartments
Section 10442 - Architectural Signage
Section 10523 - Fire Extinguishers and Accessories
Section 10736 - Metal Engineered Canopy (Alternate)
Section 10800 - Toilet Accessories

Division 11 - Equipment
Section 11400 - Food Service Equipment

Division 15 - Mechanical and Plumbing Systems
Section 15010 - Mechanical Requirements
Section 15060 - Pipes and Pipe Fittings
Section 15100 - Valves
Section 15120 - Piping Specialties
Section 15140 - Supports and Anchors
Section 15250 - Mechanical Insulation
Section 15300 - Fire Protection
Section 15412 - Soil and Waste Systems
Section 15413 - Storm Water Systems
Section 15420 - Plumbing Equipment
Section 15440 - Plumbing Fixtures
Section 15488 - Natural Gas Systems
Section 15781 - Packaged Heating and Cooling Units
Section 15841 - Low Pressure Ductwork
Section 15870 - Power and Gravity Ventilators
Section 15910 - Ductwork Accessories
Section 15932 - Air Outlets and Inlets
Section 15990 - Testing, Adjusting and Balancing

Division 16 - Electrical Systems
Section 16050 - Basic Methods and Requirements
Section 16110 - Raceways
Section 16120 - Wires and Cables
Section 16135 - Electrical Boxes and Fittings
Section 16142 - Electrical Connections for Equipment
Section 16143 - Wiring Devices
Section 16150 - Motor Controllers and Contactors
Section 16170 - Circuit and Motor Disconnects
Section 16180 - Overcurrent Protective Devises
Section 16190 - Supporting Devices
Section 16195 - Electrical Identification
Section 16450 - Grounding
Section 16470 - Distribution Systems and Equipment
Section 16480 - Power Service Entrance
Section 16490 - Communications Service Entrance
Section 16510 - Interior Building Lighting
Section 16520 - Exterior Building Lighting
Section 16721 - Fire Alarm and Smoke Detection Systems (Not in Contract)

DIVISION 0 – CONTRACT AND BID INFORMATION

SECTION 00100 - INSTRUCTIONS TO BIDDERS

1. Brinker International "Instructions to Bidders", all Articles inclusive, shall be provided separately by Owner in "Bid Package" and shall form a part of these Bidding Documents as if included herein.

2. FORM OF AGREEMENT BETWEEN OWNER AND CONTRACTOR. The successful Bidder will be required to execute Owner's standard form of Construction Contract, a copy of which is included in the "Bid Package".

SECTION 00300 - BID FORM

1. The form of proposal will be furnished separately by the Owner in their "Bid Package".

SECTION 00700 - GENERAL CONDITIONS

1. Brinker International, "General Conditions of the Contract for Construction," all Articles inclusive, shall be provided separately by Owner in "Bid Package" and shall form a part of these Bidding Documents as if included herein.

DIVISION 01 – GENERAL REQUIREMENTS

SECTION 01100 – SUMMARY OF WORK

1. PROJECT
   A. Project Name: Chili's Restaurant
   B. Owner's Name: Brinker Texas, Inc., a Delaware Corporation
      3000 Olympus Blvd.
      Dallas, Texas 75019
      (972) 980-9917

2. CONTRACT DESCRIPTION
   A. Contract Type: A single prime contract based on a Stipulated Price as provided By Owner in Bid Package
   B. Work Responsibility list below is not inclusive. Refer to Owner Provided chart on cover sheet of the drawings for additional information.

3. OWNER'S RIGHT TO INSTALL ITEMS PURCHASED UNDER SEPARATE CONTRACTS
   A. Owner retains the right to place and install, in coordination with Contractor's construction schedule, as many items and/or as much equipment as he may require during the progress of the Work, before completion of the various parts of the Work. This shall not in any way evidence completion of the Work or any portion thereof, nor shall it signify Owner's acceptance of the Work or any portion thereof.

4. WORK RESPONSIBILITY
   A. Not in Contract (NIC): Items shown or noted "(NIC)" on the drawings and/or in the specifications shall be furnished and installed by Owner under separate contract, except as described hereinafter. The Contractor shall receive, unload as required, store, coordinate and accommodate the Owner's contractors during the Work and be responsible to the extent of carrying necessary insurance to cover items in case of theft, fire, loss, malicious damage and other miscellaneous damage. Contractor shall provide all conduits, boxes, chases, etc. as indicated on the drawings for a complete installation. Included, but not inclusive, in this category are:
      1. All custom fabricated stainless steel items and corner guards.
      2. Kitchen equipment
      3. Bar equipment
      4. Walk-in coolers, freezers, condensers and refrigeration.
      5. Ice Machine, condensers and refrigeration.
      6. Stainless steel tables and shelves
      7. Beer System: Contractor is responsible for pipe chases, plumbing and electrical services per plan.
      8. CO2 Dispensing Unit and CO2 line installation. GC shall provide pipe chase through exterior wall as detailed on the construction drawings.
      9. All refrigeration unit lines and calibration.
      10. Illuminated Sign Package: Contractor shall be responsible for supplying individual electrical stub-ups at each site sign and/or each wall sign as required per plans and make final connection.
      11. F2 - LED Strip lighting (red LED) as noted on drawings.
      12. TV's, Direct TV Satellite and hook up: Contractor to provide conduit and Coax cable to TV locations as shown on the plans. Contractor to coordinate installation with Owner's Construction Manager.
      13. Pylon and/or Monument sign: Contractor shall be responsible for supplying individual electrical stub-ups at each site sign and/or each wall sign as required per plans and make final connection. GC shall construct foundation and base for Monument signs, as noted and detailed on Construction Documents.
      14. Music/Intercom System: Contractor shall supply electrical service and wire chases with pull strings per plans and coordinate installation with Owner's Construction Manager. Contractor to provide adequate wood backing to install all necessary equipment.
      15. Fire Alarm, Security and Burglar Alarm systems: Contractor shall supply electrical service and wire chases with pull strings per plans and coordinate installation with Owner's Construction Manager. Contractor to provide adequate wood backing to install all necessary equipment.
      16. Point of Sale and Back Office Systems: All system equipment shall be provided by Owner, including computer cable. All equipment shall be installed by Owner's Construction Manager. All cable and wiring shall be installed by vendor in conduit installed by General Contractor as per plans.
      17. Soda System: Contractor is responsible for pipe chases, plumbing and electrical services per plan and coordinating installation.
      18. Telephones: Owner's vendor will supply and install permanent telephone and jacks. Contractor shall supply and install junction boxes with pull strings per plan. Coordinate with Owner's Construction Manager.
      19. Window Blinds.
      20. Wall Murals.
      21. Landscaping and Irrigation: GC to rough grade and fill all islands and medians within 2 inches of top of curb; other landscape areas to be fine graded with 6 inches of topsoil within 1 inch of grade set by Civil documents.
      22. Office Safe
      23. HVAC Test and Balance.

   B. By Owner: Items shown or noted "By Owner" on the drawings and/or in the specifications shall be furnished by Owner to Contractor/subcontractor for installation by Contractor/subcontractor as part of the construction contract. Contractor shall furnish all labor, material, equipment, and tools required to receive, unload, store, protect, move from storage, uncrate, assemble, install, and level these items and shall carry necessary insurance to cover items in case of theft, fire, loss, malicious damage and other miscellaneous damage. Included, but not inclusive, in this category are:
      1. Owner shall furnish exhaust hoods with integral fire suppression, associated exhaust fans, curbs, and MUA units.
         i. All ductwork (type 1 and type 2 hoods), flue caps and duct wrap shall be provided and installed by the Contractor.
      2. Furnishings shown on architectural drawings as by Owner including booths and tables; includes ELFA shelving in Office.
      3. Chandeliers where noted on Construction Drawings: Contractor shall be responsible for supplying individual electrical junction boxes at each light as required per plans, installing fixtures and making final connection.
      4. Television brackets
      5. Décor shown on architectural drawings as By Owner.
      6. Water Softener: Unit will be set in place by others and Contractor shall plumb all water lines and make electrical hook-ups.
      7. Exterior Wait Benches
      8. Toilet accessories as follows:
         a. Toilet Paper Dispensers
         b. Soap Dispensers
         c. Paper Towel Dispensers in Kitchen area
         d. Baby Changing Stations
         e. All other Toilet accessories are by GC as specified in the Construction Documents.
      9. Pepper door pulls at Front and To-Go doors.
      10. Hostess Stand and To-Go counter.
      11. Logo Wall - Chili Pepper and Slat Wall.
      12. Quick Disconnects
      14. Detex door prop alarm at Kitchen Exit door. Contractor shall supply double gang electrical j-box and wire chases with pull strings per plans. Coordinate installation with Owner's Construction Manager.

5. OWNER FURNISHED ITEMS
   A. Receiving and unloading of Owner furnished items:
      1. The following guidelines are in place at all Brinker job sites and are to be employed by all agents acting on Brinker's behalf.
         i. Check the paperwork to be certain you are the recipient. Do not sign for any freight designated for another consignee. Refuse delivery and cause the carrier to clarify the delivery address with the shipper.
         ii. Make a notation of any visible damage being as specific as possible. The more detail provided on the shipment's condition, the better. This will allow for processing a damage claim efficiently if damage is found. On prepaid shipments, if damage to the contents is obvious, the shipment may be refused. This will lead the carrier back to the shipper for resolution. On third party shipments billed to Brinker; do not refuse delivery. As Brinker owns the goods in transit. Brinker or its agents will be required to file a claim.
         iii. Inspect the product(s) as soon after receipt as possible. Concealed damage claims must be submitted within 14 days of receipt to have any chance of recovery. Practically speaking, once you assume possession, at best the damage liability is split between Owner and carrier. Please understand that the ability to prove the damage occurred in the care and custody of the carrier diminishes with each day the damage goes unreported.
         iv. Sign the carrier's paperwork using a full signature, complete the date and indicate the number of pieces received. It is helpful to print a last name for clarity. These items are important in the event a portion of the shipment is missing. This will allow determination of who signed for what.
      2. Prior to delivery and installation of the Owner's kitchen equipment, the following must be completed:
         i. Tile must be set and clean; Fiberglass Reinforced Panels (FRP) and/or tile shall be hung and trimmed; acoustical ceiling grid complete with all light fixtures, ductwork and diffusers installed; acoustical ceiling tile shall be installed; and all gypsum wall board ceilings shall be finished.
         i. Contractor shall provide motorized, hydraulic forklift at site to assist in the offloading of Owner provided kitchen equipment.
         ii. Contractor to provide copies of all delivery tickets, bills of lading, etc. certifying receipt of the Owner furnished items.
         iii. Inspection of all Owner furnished items upon delivery for evidence of damage is the responsibility of the Contractor. The Contractor shall repair or replace, at no cost to the Owner, any damaged equipment received at the job site and not noted on the bill of lading.
         iv. The Contractor is solely responsible for care of the Owner furnished items once received until completion of the contract. Any lost or damage during his possession will be repaired or replaced at no cost to the Owner.
   B. Foodservice equipment installation:
      1. The Kitchen Equipment Supplier (KES) shall off load, uncrate and store all food service equipment, set in place, level and scribe to walls, floor and base as required. Pull equipment tight and secure field joints and properly dispose of all packing material.
      2. Properly anchor or fasten to walls, floor, ceiling, and base as per installation recommendations of the food service equipment manufacturer.
      3. Provide silicone bead where equipment joins together or abuts wall surfaces. Color of silicone to be clear.
      4. Assemble and secure in place all loose components such as, but not limited to, the following examples: tops of base units, shelves, legs, dispensers, etc.
      5. Installation of all food service equipment shall comply with all applicable codes and standards required by the local health department.
      6. The Contractor shall provide rough in water, drainage and other service piping adjacent to food service equipment requiring same, capping drain outlets with suitable plugs and terminating water and other service with shut-off valves and cocks. After installation of food service equipment, Contractor shall make all final connections.
      7. The Contractor shall provide rough-in electrical wiring terminated in outlet boxed adjacent to food service equipment and, after installation of equipment, shall make all final connections. This includes supplying devices, cord and plugs, etc, as required to complete installation.
      8. Sealing of Penetrations:
         i. Contractor shall adequately seal with escutcheons all utility and service piping and other required openings through walls and floors.
         ii. Contractor shall seal conduit/outlet penetrations with approved foam insulation and silicone caulking as required.
      9. Workmanship:
         i. Graining: Where two metal surfaces are butt welded, grain shall run in the same direction.
         ii. Cove all intersections of vertical and horizontal sheet metal on a 5/8" radius unless otherwise indicated.
      10. Welding: All welding shall be per AWS standards by electric arc method with rod of same composition as parts welded. Make welds complete, strong, and ductile with rubble ground off and joints finished smooth, polished, and re-grained. Welds shall not be visible on continuous appearance. All welding shall be of a non-toxic nature when used on surfaces exposed to unpackaged food.
      11. Grinding, Polishing, and Finishing: Any material sunken or depressed by welding operation shall be hammered and peened flush with adjacent surfaces and, if necessary, ground again to eliminate low spots. Surfaces showing evidence of warpage and/or burn discoloration will not be accepted. In all cases, textures from rough grinding shall be removed by successive finer polishing operations until the grain of the entire surface is homogeneous.
      12. Completion:
         i. Contractor shall remove all protective coverings, tags, labels, and tape from equipment.
         ii. Contractor shall thoroughly clean and polish Owner furnished items.

3. OWNER OCCUPANCY
   A. Owner intends to occupy the Project upon Substantial Completion. Contractor shall cooperate with Owner to minimize conflict and to facilitate Owner's operations and schedule the Work to accommodate Owner occupancy.
   B. Owner reserves right to occupy and to place and install equipment as necessary in completed areas of building before Substantial Completion, provided such occupancy does not interfere with completion of Work. Such placing of equipment and partial occupancy shall not constitute acceptance of total Work.
   C. Contractor shall obtain Certificate of Occupancy from local building officials before Owner occupancy
   D. Mechanical and Electrical Systems:
      1. Before partial Owner occupancy, mechanical and electrical systems shall be fully operational.
      2. Required inspections and tests shall have been successfully completed.
      3. On occupancy, Owner will provide operation and maintenance of mechanical and electrical systems in occupied portions of Building.

4. MISCELLANEOUS PROVISIONS
   A. Accessibility Compliance:
      1. Full compliance with Uniform Federal Accessibility Standards (UFAS), and Americans with Disabilities Act (ADA), prohibiting discrimination on basis of disability by public accommodations, is required for Work of this Project.
      2. This Project has been designed to and requires full compliance with ADA regulations, whether or not specific references or notes to regulations are made on Drawings or in Specifications.

5. PROJECT GENERAL NOTES
   A. Unless noted otherwise, all work in these drawings and specifications shall be performed by the Contractor.
   B. The Contractor shall field verify all conditions and dimensions prior to any work and shall be responsible for all work and materials including those furnished by subcontractors. Contractor shall accept premises as found. Owner assumes no responsibility for the condition of the existing site or existing structures at the time of bidding or thereafter.
   C. The Contractor is responsible for correcting any errors after the start of construction which has not been brought to the attention of the architect. The means of correcting any error shall first be approved by the Owner.
   D. Dimensions take precedence over drawings. DO NOT SCALE DRAWINGS TO DETERMINE ANY LOCATIONS. The architect shall be notified if any discrepancy occurs prior to continuing with work.
   E. All plan dimensions are from face of stud or face of masonry unless noted otherwise.
   F. The Contractor shall report to the Owner and Architect any errors, inconsistencies, or omissions discovered.
   G. All construction shall comply with the applicable building codes and local restrictions. The Contractor must comply with the Contractor registration requirements of all governing authorities.
   H. The general building permits shall be paid for by the Owner. All other permits shall be secured and paid for by the subcontractor directly responsible. All required city, county, and/or state licenses shall be acquired and paid for by the individual subcontractor.
   I. It shall be the responsibility of the Contractor to locate all existing utilities whether shown herein or not and to protect them from damage. The Contractor shall bear all expense of repair or replacement of utilities or other property damaged by operations in conjunction with the prosecution of the work.
   J. The Contractor shall be responsible for and shall replace or remedy any faulty, improper, or inferior materials or workmanship which shall appear within one year or as otherwise specified for a specific component after the completion and acceptance of the work under this contract.
   K. The Contractor is to provide blocking as required for mounting of booth tables, wall mounted shelves, cabinets, HC grab bars and partition braces, in addition to other requirements specified herein.

6. CONTRACTOR USE OF SITE AND PREMISES
   A. Provide access to and from site as required by law and by Owner:
      1. Emergency Building Exits During Construction: Keep all exits required by code open during construction period.
      2. Do not obstruct roadways, sidewalks, or other public ways without permit.
   B. Utility Outages and Shutdown:
      1. Prevent accidental disruption of utility services to other facilities.

SECTION 01110 - WORK COVERED BY CONTRACT DOCUMENTS

1. INTENT OF DRAWINGS AND SPECIFICATIONS
   A. The Contractor shall complete all Work as provided for in Contract Documents including Drawings and Specifications. Anything mentioned in the Specifications and not shown on the Drawings, or shown on the Drawings and not mentioned in the Project Manual, shall be furnished and installed as if shown and mentioned in both. The Contractor shall furnish all materials or labor required to complete Work shown on the Drawings and called out in the Project Manual, to include labor and material requirements reasonably inferable therefrom as being necessary to complete the work, whether each and every single item necessary to completion is specified or detailed or not.

2. CONTRACTOR RESPONSIBILITY FOR WORK REQUIRED
   A. The organization of the Specifications into Divisions, Sections and Paragraphs and the arrangement of the Drawings are not intended to control the Contractor in dividing the Work among Subcontractors or to establish the limits and extent of work to be performed by a particular trade. The Contractor alone is responsible for the completion of the entire work as drawn and specified, complete in place and in functional or operating conditions. The division of the Project Manual into sections and paragraphs is for convenience only and not for the purpose of limiting or restricting the performance of any portion of the Work to any particular trade.

SECTION 01150 - ALTERNATES/ALTERNATIVES

1. GENERAL
   A. This Section includes administrative and procedural requirements for alternates.

2. DEFINITIONS
   A. Alternate: An amount proposed by bidders and stated on the Bid Form for certain work defined in the Bidding Requirements that may be added to or deducted from the Base Bid amount if Owner decides to accept a corresponding change either in the amount of construction to be completed or in the products, materials, equipment, systems, or installation methods described in the Contract Documents.
      1. The cost or credit for each alternate is the net addition to or deduction from the Contract Sum to incorporate alternate into the Work. No other adjustments are made to the Contract Sum.
      2. Alternate Bids shall include all overhead and profit applicable to that portion of the work.
      3. The description provided for each Alternate Bid is recognized to be incomplete and abbreviated but implies that each change must be complete for the scope of work affected. The descriptions are primarily scope definitions, and do not necessarily detail the full range of materials and processes needed to complete the work as required. Refer to applicable Specification Sections, and to applicable drawings, for the specific requirements of the work, regardless of whether references are so noted in the description of each Alternate. Coordinate related work and modify surrounding work as required to properly integrate with the work of each Alternate. Any change of details, construction, etc., as required to accommodate the Alternate shall be the responsibility of the Contractor and shall be included in his Alternate Bid Price.
      4. Where methods of construction, materials, finishes, or details of installation, required by the various Alternate Bids, differ from the requirements shown on drawings or specified for corresponding items, the Alternate construction, materials, etc., will be subject to approval by the Owner.
      5. Approval of the Alternate makes all requirements of scope, performance, submissions, service, and guarantee binding as any other material name appearing in the Specifications for the Base Bid. All necessary changes in building design or construction to accommodate the alternate materials shall be the sole responsibility of the Contractor without extra cost to the Owner.
      6. Bids submitted without requested Alternates may be deemed incomplete and rejected at Owner's option.

3. PROCEDURES
   A. Coordination: Modify or adjust affected adjacent work as necessary to completely integrate work of the alternate into Project.
      1. Include as part of each alternate, miscellaneous devices, accessory objects, and similar items incidental to or required for a complete installation whether or not indicated as part of alternate.
      2. Prior to installation of the Alternate items, verify that all surfaces have been modified as necessary to accept the installation and that the item or items may be installed in complete accordance with their manufacturer's current recommendations. Notify the Owner of any discrepancies before proceeding.
      3. Include as cost of bid alternate and cost of related coordination, modification, or adjustment to the work to incorporate the bid alternate scope.
   B. Notification: Immediately following award of the Contract, notify each party involved, in writing, of the status of each alternate. Indicate if alternates have been accepted, rejected, or deferred for later consideration. Include a complete description of negotiated modifications to alternates.
   C. Execute accepted alternates under the same conditions as other work of the Contract.

4. GENERAL
   A. Acceptance: Alternates will be exercised at option of Owner.

5. ALTERNATE PROPOSALS
   A. Alternate Proposal No. 1: General Contractor to provide a "Metal Engineered Canopy" as specified in the technical sections of these Specifications.

SECTION 01300 - ADMINISTRATIVE REQUIREMENTS

1. PROJECT COORDINATION
   A. Cooperate with the Owner's Construction Manager regarding allocation of mobilization areas on site; for field offices and sheds, for worker access, traffic, parking facilities and use of temporary utilities and construction facilities.
   B. Comply with Owner's procedures for intra-project communications; submittals, reports and records, schedules, coordination drawings, and recommendations; and resolution of ambiguities and conflicts.
   C. Coordinate field engineering and layout work with Owner's Construction Manager.
   D. Make the following types of submittals to Owner's Construction Manager:
      1. Requests for interpretation and substitution.
      2. Shop drawings, product data, and samples.
      3. Test and inspection reports.
      4. Manufacturer's instructions and field reports.
      5. Applications for payment and change order requests.
      6. Progress schedules.
      7. Coordination drawings.
      8. Closeout submittals.

2. PROGRESS MEETINGS
   A. Arrangement meetings, prepare agenda with copies for participants and preside at meetings.
   B. Attendance Required: Job superintendent, major Subcontractors and suppliers, Owner, as appropriate to agenda topics for each meeting.
   C. Agenda:
      1. Review minutes of previous meetings.
      2. Review of Work progress.
      3. Field observations, problems, and decisions.
      4. Identification of problems which impede planned progress.
      5. Review of submittals schedule and status of submittals.
      6. Maintenance of progress schedule.
      7. Corrective measures to regain projected schedules.
      8. Planned progress during succeeding work period.
      9. Maintenance of quality and work standards.
      10. Effect of proposed changes on progress schedule and coordination.
      11. Other business relating to Work.
   D. Record minutes and distribute copies within two days after meeting to participants, with two copies to Owner, participants, and those affected by decisions made.

3. SITE MOBILIZATION MEETING
   A. Owner may schedule a meeting at the Project site prior to, or shortly after, Contractor occupancy.
   B. Attendance Required:
      1. Contractor and Superintendent
      2. Owner.
      3. Major Subcontractors.
   C. Agenda:
      1. Use of premises by Owner and Contractor.
      2. Owner's requirements and partial occupancy prior to completion.
      3. Construction facilities and controls provided by Owner.
      4. Survey and building layout.
      5. Security and housekeeping procedures.
      6. Schedules.
      7. Application for payment procedures.
      8. Procedures for testing.
      9. Procedures for maintaining record documents.
      10. Requirements for start-up of equipment.
      11. Inspection and acceptance of equipment put into service during construction

4. PROGRESS MEETINGS
   A. Make arrangements for meetings, prepare agenda with copies for participants and preside at meetings.
   B. Attendance Required: Job superintendent, major Subcontractors and suppliers as required, Owner, as appropriate to agenda topics for each meeting.
   C. Agenda:
      1. Review of Work progress.
      2. Field observations, problems, and decisions.
      3. Identification of problems which impede planned progress.
      4. Review of submittals schedule and status of submittals.
      5. Maintenance of progress schedule.
      6. Corrective measures to regain projected schedules.
      7. Planned progress during succeeding work period.
      8. Maintenance of quality and work standards.
      9. Effect of proposed changes on progress schedule and coordination.
      10. Other business relating to Work.

5. CONSTRUCTION PROGRESS SCHEDULE
   A. Within 5 days after project award submit complete schedule, then within 10 days after joint review, submit final schedule.
   B. Submit updated schedule with each Application for Payment.

6. SCHEDULE OF VALUES
   A. Form: Typed on Brinker International form "Schedule of Values" to be provided by Owner. Contractor's standard form or media-driven printout will be considered on request. Submit sample form for Owner's written approval prior to first payment request.
   B. Format: Table of contents of this Project Manual. Identify each line item with number and title of the major Project Manual Section.
   C. Overhead and Profit: Include in each line item a directly proportional amount of Contractor's overhead and profit.
   D. Change Orders: Revise schedule to list change orders, for each Application for Payment.
   E. Copies Required: Same as for progress schedules.

7. PROGRESS PHOTOGRAPHS
   A. Submit digital, electronic photograph files weekly with each project report to Owner's Construction Manager and Director of Development.
   B. Maintain one set of all photographs at project site for reference; same copies as submitted, identified as such.
   C. Provide photographs of site and construction throughout progress of Work.
   D. In addition to periodic, recurring views, take photographs of each of the following events:
      1. Completion of site clearing.
      2. Excavations in progress.
      3. Foundations in progress and upon completion.
      4. Structural framing in progress and upon completion.
      5. Enclosure of building, upon completion.
      6. Photos of all Tower thru-wall flashing prior to cover up.
      7. Final completion, minimum of ten (10) photos.
   E. Views:
      1. Provide non-aerial photographs from four cardinal views at each specified time, until Date of Substantial Completion.
      2. Photographs of Building Exterior to be overall shots taken directly in front of each elevation.
      2. Provide factual presentation.
   F. Digital Photographs: Minimum resolution of 1024 by 768, in JPG format; provide files unaltered by photo editing software.
      1. Delivery Medium: Via email and posting to Owner's website.

8. PROCEDURES
   A. No submittals should be made for items which are to be provided per plans and specifications unless specifically required by the specifications or requested by Owner.
   B. Delivery Address: Deliver submittals to Owner at address listed on Invitation To Bid.
   C. Transmittal Form and Identification: Identify project, Contractor, subcontractor, major supplier; identify pertinent Drawing sheet and detail number, and Specification Section number, as appropriate. Identify deviations from Contract Documents. Provide space for Contractor and Owner/Architect review stamps.
   D. Review:
      1. Contractor:
         a. General: Review submittals prior to transmittal; determine and verify field measurements, field construction criteria, manufacturer's catalog numbers, and confirmation of submittal with requirements of Contract Documents. Submittal information deviating from requirements of contract documents shall be clearly circled in red.
         b. Coordination: Coordinate submittals with requirements of Work and of Contract Documents.
         c. Certification: Apply stamp and sign or initial each sheet of shop drawings and product data, and each sample label to certify compliance with requirements of Contract Documents. Notify Owner in writing at time of submittal, of deviations from requirements of Contract Documents.
      2. Owner:
         a. General: Owner will review shop drawings, product data, and samples and return submittals within 14 days.
         b. Acceptance and Fabrication: Do not fabricate products or begin work which requires submittals until return of submittal with Owner's acceptance.
   E. Revisions: After Owner review of submittal, revise and resubmit as required, identifying changes made since previous submittal.
   F. Distribution: Distribute copies of reviewed submittals to concerned persons. Instruct recipients to promptly report any inability to comply with provisions.

9. SUBMITTALS FOR REVIEW
   A. When the following are specified in individual sections, submit them for review:
      1. Product data.
      2. Shop drawings.
      3. Samples for selection.
   B. Any item submitted that deviates for Plans and Specifications shall be noted as such in large blue writing.
   C. Submit to Owner's Construction Manager for review for the limited purpose of checking for conformance with information given and the design concept expressed in the contract documents.
   D. Samples will be reviewed only for aesthetic, color, or finish selection.
   E. After review, provide copies and distribute in accordance with SUBMITTAL PROCEDURES and for record documents purposes described in Section 01780 - CLOSEOUT SUBMITTALS.

10. SUBMITTALS FOR INFORMATION
   A. When the following are specified in individual sections, submit them for information:
      1. Design data.
      2. Certificates.
      3. Test reports.
      4. Inspection reports.
      5. Manufacturer's instructions.
      6. Manufacturer's field reports.
      7. Other types indicated.

11. SUBMITTALS FOR PROJECT CLOSEOUT
   A. When the following are specified in individual sections, submit them at project closeout:
      1. Project record documents.
      2. Operation and maintenance data.
      3. Warranties.
      4. Bonds.
      5. Other types as indicated.

12. NUMBER OF COPIES OF SUBMITTALS
   A. Documents for Review:
      1. Small Size Sheets, Not Larger Than 8-1/2 x 11 inches: Submit the number of copies which the Contractor requires, plus one copy which will be retained by the Owner.
      2. Larger Sheets, Not Larger Than 30 x 42 inches: Submit the number of reproductions which Contractor requires, plus one copy which will be retained by Owner.
      3. All submittals shall also be issued in electronic (PDF) format.
   B. Documents for Information: Submit in electronic (PDF) format.
   C. Documents for Project Closeout: Submit in electronic (PDF) format.
   D. Samples: Submit the number specified in individual specification sections; one of which will be retained by Owner.
      1. After review, produce duplicates.
      2. Retained samples will not be returned to Contractor unless specifically so stated.

ARCHITECT:

DAVID SCOTT WINDLE, AIA

6201 CAMPUS CIRCLE DRIVE E.
IRVING, TEXAS 75038
TEL: 972.870.1288
WWW.IDSTUDIO4.COM
E-MAIL scottw@idstudio4.com

CORPORATE:
BRINKER RESTAURANT CORPORATION, A VIRGINIA CORPORATION
3000 OLYMPUS BLVD.
DALLAS, TEXAS 75019
972.980.9917
www.brinker.com

09/23/2024
ISSUE FOR BID
THESE DOCUMENTS ARE FOR BIDDING PURPOSES ONLY. DO NOT USE FOR CONSTRUCTION.

RESTAURANT #CH1679
PROTOTYPE 18.5FS

CHILI'S TOOELE
951 N MAIN STREET
TOOELE, UT 84074

CLIENT: BRINKER RESTAURANT CORP. A VIRGINIA CORPORATION

DATE	DESCRIPTION
6/27/2024	ISSUE FOR PERMIT
9/23/2024	ISSUE FOR BID

	DATE	DESCRIPTION

PROJECT NUMBER:
CHI24007

SHEET TITLE:
SPECIFICATIONS
00100 - 01300

SHEET NUMBER:
SP100

SECTION 01312 - ON-LINE PROJECT MANAGEMENT

1. WORK SPECIFIED

A. Owner shall provide an on-line project management system (herein referred to as OPM or web site) designed to enable Contractor to access construction documents electronically, including bulletins, plans, addendum, etc. Additionally, the web site will be used for all communication relating to the project including RFI's and schedules among Contractor, Owner, and others as determined by Owner.
B. It is the mutual responsibility of Contractor and Owner to maintain accurate contact and profile information.

2. PROPRIETARY INFORMATION AND SECURITY

A. Information gathered through OPM is proprietary and not to be used for any purpose other than the management of the respective project. Contact information is not to be used for advertising or any other purpose not specifically associated with the Work.
B. Information may not be disclosed on or from the web site in forums, message boards or news groups that may be
C. Available to other users and becomes public information.
D. Contractor shall use all reasonable diligence when requesting or granting access for any person or persons and whether intentionally or unintentionally.
E. Owner reserves the right to restrict access to any person or persons it deems a threat to the integrity or security of the web site.

3. HARDWARE AND SOFTWARE REQUIREMENTS

A. Minimum Computer Hardware Requirements
1. CD R/W or DVD R-W
2. High speed modem, router, WI-FI or other access card necessary to access and interface with the Internet.
B. Minimum Software Requirements
1. Microsoft Office (with binder tool installed)
2. Internet Explorer
3. Image management software such as ACDSee
4. Adobe Acrobat Reader (free)
5. Efax reader software (free)

4. SPECIFIC CONTRACTOR REQUIREMENTS

A. The Contractor shall use OPM as its primary means of communication.
B. The Contractor shall upload a minimum of 10 digital photographs but not less than required to adequately represent the status of the overall Project and construction related issues each week during construction to OPM.
C. All construction photographs must be posted to OPM every Friday afternoon during construction, beginning at site mobilization and ending at the Certificate of Substantial Completion or completion of the punch list, whichever is later. All photographs shall be provided in .jpg format. RFI's will include photographs as appropriate.
D. The Contractor will maintain the Project Schedule including actual and forecast activities, and advise Owner of updates.
E. The Contractor shall maintain an Internet connection (hardwired or wireless) at the jobsite. The Contractor shall also provide a computer with registered copies of software, digital camera, telephone, fax machine or e-fax, and printer.
F. All RFI's, CCD's (Construction Change Directives), RFP's, Change Proposals and any other required form of document shall be processed online through the interface on Owner's web site.
G. The Contractor and its subcontractors, vendors and suppliers shall submit all required shop drawings and requests for substitutions in digital form through an interface on the OPM at Owner's request.

SECTION 01400 - QUALITY REQUIREMENTS

1. SUBMITTALS

A. Test and Reports: After each test/inspection, promptly submit electronic copy of report to Owner's Construction Manager and to Contractor.
1. Include:
a. Date issued.
b. Project title and number.
c. Name of inspector.
d. Date and time of sampling or inspection.
e. Identification of product and specifications section.
f. Location in the Project.
g. Type and Date of test/inspection.
h. Results of test/inspection.
i. Conformance with Contract Documents.
j. Provide interpretation of results.
2. Test reports are submitted for the limited purpose of assessing conformance with information given and the design concept expressed in the contract documents.
B. Certificates: When specified in individual specification sections, submit certification by the manufacturer and Contractor or subcontractor, in quantities specified for Product Data.
1. Indicate material or product conforms to or exceeds specified requirements. Submit supporting reference data, affidavits, and certifications as appropriate.

2. REFERENCES AND STANDARDS

A. For products and workmanship specified by reference to a document or documents not included in the Specifications, also referred to as reference standards, comply with requirements of the current standard, except when more rigid requirements are specified or are required by applicable codes.
B. Should specified reference standards conflict with Contract Documents, request clarification from Owner's Construction Manager before proceeding.

3. TESTING AND INSPECTION AGENCIES

A. Owner will employ services of an independent testing agency to perform specified testing. Employment of agency in no way relieves Contractor of obligation to perform Work in accordance with requirements of Contract Documents.

4. CONTROL OF INSTALLATION

A. Monitor quality control over suppliers, manufacturers, products, services, site conditions, and workmanship, to produce Work of specified quality.
B. Comply with manufacturers' instructions, including each step in sequence.
C. Comply with specified standards as minimum quality for the Work except where more stringent tolerances, codes, or specified requirements indicate higher standards or more precise workmanship.
D. Verify that field measurements are as indicated on shop drawings or as instructed by the manufacturer.

5. TOLERANCES

A. Monitor fabrication and installation tolerance control of products to produce acceptable Work. Do not permit tolerances to accumulate.

B. Comply with manufacturers' tolerances. Should manufacturers' tolerances conflict with Contract Documents, request clarification from Owner's Construction Manager before proceeding. Owner standards will take precedence and in most cases will be significantly higher than industry standards.

6. TESTING AND INSPECTION

A. Testing Agency Duties:
1. Provide qualified personnel at site. Cooperate with Owner's Construction Manager and Contractor in performance of services.
2. Perform specified sampling and testing of products in accordance with specified standards.
3. Ascertain compliance of materials and mixes with requirements of Contract Documents.
4. Promptly notify Owner's Construction Manager and Contractor of observed irregularities or non-conformance of Work or products.
5. Perform additional tests and inspections required by Owner's Construction Manager.
6. Submit reports of all tests/inspections specified in electronic (PDF) format.
C. Limits on Testing/Inspection Agency Authority:
1. Agency may not release, revoke, alter, or enlarge on requirements of Contract Documents.
2. Agency may not approve or accept any portion of the Work, may not assume any duties of Contractor and has no authority to stop the Work.
D. Contractor Responsibilities:
1. Deliver to agency at designated location, adequate samples of materials proposed to be used which require testing, along with proposed mix designs.
2. Cooperate with laboratory personnel, and provide access to the Work and to manufacturers' facilities.
3. Provide incidental labor and facilities:
a. To obtain and handle samples at the site or at source of Products to be tested/inspected.
b. To facilitate tests/inspections.
c. To provide storage and curing of test samples.
4. Notify Owner's Construction Manager and laboratory 24 hours prior to expected time for operations requiring testing/inspection services.
5. Employ services of an independent qualified testing laboratory and pay for additional samples, tests, and inspections required by Contractor beyond specified requirements.
6. Arrange with Owner's agency and pay for additional samples, tests, and inspections required by Contractor beyond specified requirements.
E. Re-testing required because of non-conformance to specified requirements shall be performed by the same agency on instructions by Owner's Construction Manager. Payment for re testing will be charged to the Contractor by deducting testing charges from the Contract Price.

7. DEFECT ASSESSMENT

A. Replace Work or portions of the Work not conforming to specified requirements.

B. If, in the opinion of Owner's Construction Manager, it is not practical to remove and replace the Work, Owner will direct an appropriate remedy or adjust payment.

SECTION 01500 - TEMPORARY FACILITIES AND CONTROLS

1. TEMPORARY UTILITIES

A. Provide and pay for all temporary electrical power, lighting, water, heating and cooling, and ventilation required for construction purposes.

2. TELEPHONE SERVICE

A. Provide, maintain, and pay for telephone and facsimile services to field office at time of project mobilization.

3. TEMPORARY SANITARY FACILITIES

A. Provide and maintain required facilities and enclosures. Provide at time of project mobilization. Maintain daily in clean and sanitary condition.

4. TEMPORARY FIRE PROTECTION

A. Observe and enforce compliance by all trades engaged in work under the contract with requirements of City, County, State, Federal and Insurance Underwriter's regulations to minimize fire hazards incidental to the workProvide operable fire extinguishing devices in well-marked, accessible locations distributed throughout the project in compliance with governing codes and ordinances.

5. BARRIERS

A. Provide barriers to prevent unauthorized entry to construction areas, to allow for owner's use of site and to protect existing facilities and adjacent properties from damage from construction operations and demolition.
B. Provide barricades and covered walkways required by governing authorities for public rights-of-way and for public access to existing building.
C. Protect non-owned vehicular traffic, stored materials, site, and structures from damage.

6. FENCING

A. Provide 6 foot high fence around construction site; equip with vehicular and pedestrian gates with locks if required by Owner's Construction Manager. GC to confirm with Owner's Construction Manager prior to submission of bid. Failure to request confirmation assumes Contractor has included fencing in base bid.

7. SECURITY

A. Provide security and facilities to protect Work, existing facilities, and Owner's operations from unauthorized entry, vandalism, or theft.

8. VEHICULAR ACCESS AND PARKING

A. Coordinate access and haul routes with governing authorities and Owner.
B. Provide and maintain access to fire hydrants, free of obstructions.
C. Provide temporary parking areas to accommodate construction personnel. When site space is not adequate, provide additional off-site parking.

9. WASTE REMOVAL

A. Provide waste removal facilities and services as required to maintain the site in clean and orderly condition. Provide containers with lids and remove trash from site.
B. If materials to be recycled or re-used on the project must be stored on-site, provide suitable non-combustible containers; locate containers holding flammable material outside the structure unless otherwise approved by the authorities having jurisdiction.
C. Open free-fall chutes are not permitted. Terminate closed chutes into appropriate containers with lids.
D. Waste removal facility, dumpster, to remain on site with pickup service, through building turnover plus one (1) week for Owner's vendor use.

10. PROJECT IDENTIFICATION

A. Provide and erect project identification sign, minimum 3 feet x 5 feet, design as directed by Owner.
B. No other signs are allowed without Owner permission except those required by law.

11. FIELD OFFICES

A. Office: Weather tight, with lighting, electrical outlets, heating, cooling equipment, and equipped with sturdy furniture, drawing rack, and drawing display table. Include installation and payment for telephone service, an answering machine, a FAX machine, a digital camera, laptop computer and high-speed Internet access for email. Telephone shall be a mobile digital cellular unit.
B. Provide space for Project meetings, with table and chairs to accommodate 6 persons.

12. TEMPORARY STORAGE SHEDS

A. Contractor shall provide, as required, at location on premises, watertight storage sheds for storage of materials, equipment and tools which might be damaged by exposure to weather. Provide sheds of sufficient size and capacity to hold damageable materials which may be on site at one time. Floors shall be raised at least 6 inches above the ground. Maintain sheds in good condition and relocate from time to time as necessary. Remove sheds when no longer needed.

13. TEMPORARY OWNER'S OFFICE

A. Contractor shall provide power (200 amp service) and final connection to Owner-provided hiring trailer. The contractor shall provide phone wire and final connections from the D mark in the mechanical room to the hiring trailer and provide phone jacks (3) with dial tone. Owner will move the hiring trailer onto site six weeks prior to scheduled date of completion of the project.

14. REMOVAL OF UTILITIES, FACILITIES, AND CONTROLS

A. Remove temporary utilities, equipment, facilities, materials, prior to Substantial Completion inspection.
B. Remove underground installations to a minimum depth of 2 feet. Grade site as shown.
C. Clean and repair damage caused by installation or use of temporary work.
D. Restore existing facilities used during construction to original condition.

SECTION 01580 - PROJECT IDENTIFICATION AND SIGNS

1. PROJECT SIGN FRAME

A. Within seven days of date of notice to proceed, furnish and erect one (1) project identification signs, in a location directed by the Owner: Sign shall consist of 4x4 inch posts supporting a 4'-0" high by 8'-0" wide sheet of 3/4 inch thick exterior A/C plywood. Locate post 1'-0" from ends of plywood; 6'-0" centers. Bottom of plywood shall be at 4'-0" above grade.
B. Framework shall receive a fabric sign to be furnished by Owner and installed by General Contractor. Installation of sign will be by wrap and staple method; long staples, closely spaced on back side.

2. CONTRACTOR SIGNS AND ADVERTISING

A. Contractor and principal subcontractors may have company signs on field office, at Contractor's expense, if so desired. No other free-standing signs or advertising of any kind other than "warning" signs and notices required by law will be permitted on the site or about the premises.
B. If a permit is required, the Contractor is responsible for obtaining the permit.

SECTION 01600 - PRODUCT REQUIREMENTS

1. SUBMITTALS

A. Product Data Submittals: Submit manufacturer's standard published data. Mark each copy to identify applicable products, models, options, and other data. Supplement manufacturers' standard data to provide information specific to this Project.
B. Shop Drawing Submittals: Prepared specifically for this Project; indicate utility and electrical characteristics, utility connection requirements, and location of utility outlets for service for functional equipment and appliances.
C. Sample Submittals: Illustrate functional and aesthetic characteristics of the product, with integral parts and attachment devices. Coordinate sample submittals for interfacing work.
1. For selection from standard finishes, submit samples of the full range of the manufacturer's standard colors, textures, and patterns.

2. PROCEDURES

A. No submittals should be made for items which are to be provided per plans and specifications unless specifically required by the specifications or requested by Owner.
B. Delivery Address: Deliver submittals to Owner at address listed on Invitation To Bid.
C. Transmittal Form and Identification: Identify project, Contractor, subcontractor, major supplier; identify pertinent Drawing sheet and detail number, and Specification Section number, as appropriate. Identify deviations from Contract Documents. Provide space for Contractor and Owner/Architect review stamps.
D. Review:
1. Contractor:
a. General: Review submittals prior to transmittal; determine and verify field measurements, field construction criteria, manufacturer's catalog numbers, and conformance of submittal with requirements of Contract Documents. Submittal information deviating from requirements of contract documents shall be clearly circled in red.
b. Coordination: Coordinate submittals with requirements of Work and of Contract Documents.
c. Certification: Apply stamp and sign or initial each sheet of shop drawings and product data, and each sample label to certify compliance with requirements of Contract Documents. Notify Owner in writing at time of submittal, of deviations from requirements of Contract Documents.
2. Owner:
a. General: Owner will review shop drawings, product data, and samples and return submittals within 14 days.
b. Acceptance and Fabrication: Do not fabricate products or begin work which requires submittals until return of submittal with Owner's acceptance.

E. Revisions: After Owner review of submittal, revise and resubmit as required, identifying changes made since previous submittal.
F. Distribution: Distribute copies of reviewed submittals to concerned persons. Instruct recipients to promptly report any inability to comply with provisions.

3. NEW PRODUCTS

A. Provide new products unless specifically required or permitted by the Contract Documents.

4. PRODUCT OPTIONS

A. Products Specified by Reference Standards or by Description Only: Use any product meeting those standards or description.
B. Products Specified by Naming One or More Manufacturers: Use a product of one of the manufacturers named and meeting specifications, no options or substitutions allowed.
C. Products Specified by Naming One or More Manufacturers with a Provision for Substitutions: Submit a request for substitution for any manufacturer not named, clearly designated as a "Request for Substitution".

5. SUBSTITUTION PROCEDURES

A. Instructions to Bidders specify time restrictions for submitting requests for substitutions during the bidding period. Comply with requirements specified in this section.
B. Substitutions may be considered when a product becomes unavailable through no fault of the Contractor. No other substitutions will be allowed.
C. Document each request with complete data substantiating compliance of proposed substitution with Contract Documents.
D. A request for substitution constitutes a representation that the submitter:
1. Has investigated proposed product and determined that it meets or exceeds the quality level of the specified product.
2. Will provide the same warranty for the substitution as for the specified product.
3. Will coordinate installation and make changes to other Work which may be required for the Work to be complete with no additional cost to Owner.
4. Waives claims for additional costs or time extension which may subsequently become apparent.
E. Substitutions will not be considered when they are indicated or implied on shop drawing or product data submittals, without separate written request, or when acceptance will require revision to the Contract Documents.

6. OWNER-SUPPLIED PRODUCTS

A. Contractor's Responsibilities:
1. Review Owner reviewed shop drawings, product data, and samples.
2. Receive and unload products at site; inspect for completeness or damage.
3. Handle, store, install and finish products.
4. Repair or replace items damaged after receipt.

7. TRANSPORTATION AND HANDLING

A. Coordinate schedule of product delivery to designated prepared areas in order to minimize site storage time and potential damage to stored materials.
B. Transport and handle products in accordance with manufacturer's instructions.
C. Provide equipment and personnel to handle products by methods to prevent soiling, disfigurement, or damage.

8. STORAGE AND PROTECTION

A. Designate receiving/storage areas for incoming products so that they are delivered according to installation schedule and placed convenient to work area in order to minimize waste due to excessive materials handling and misapplication.
B. Store and protect products in accordance with manufacturers' instructions with labels intact and legible.
C. Store sensitive products in weather tight, climate controlled, enclosures in an environment favorable to product.
D. For exterior storage of fabricated products, place on sloped supports above ground.
E. Cover products subject to deterioration with impervious sheet covering. Provide ventilation to prevent condensation and degradation of products.
F. Arrange storage of products to permit access for inspection. Periodically inspect to verify products are undamaged and are maintained in acceptable condition.

SECTION 01700 - EXECUTION REQUIREMENTS

1. EXAMINATION

A. Verify that existing site conditions and substrate surfaces are acceptable for subsequent work. Start of work means acceptance of existing conditions.
B. Verify that existing substrate is capable of structural support or attachment of new work being applied or attached.
C. Verify that utility services are available, of the correct characteristics, and in the correct locations.
D. Prior to Cutting: Examine existing conditions prior to commencing work, including elements subject to damage or movement during cutting and patching. After uncovering existing work, assess conditions affecting performance of work. Beginning of cutting or patching means acceptance of existing conditions.

2. PREPARATION

A. Clean substrate surfaces prior to applying next material or substance.
B. Seal cracks or openings of substrate prior to applying next material or substance.
C. Apply manufacturer required or recommended substrate primer, sealer, or conditioner prior to applying any new material or substance in contact or bond.

3. LAYING OUT THE WORK

A. Verify locations of survey control points prior to starting work. Protect survey control points prior to starting site work; preserve permanent reference points during construction.
B. Promptly report to Owner's Construction Manager the loss or destruction of any reference point or relocation required because of changes in grades or other reasons.
C. Establish elevations, lines, and levels. Locate and lay out by instrumentation and similar appropriate means:
1. Site improvements including pavements; stakes for grading, fill and topsoil placement; utility locations, slopes, and invert elevations.
2. Grid or axis for structures.
3. Building foundation, column locations, ground floor elevations, and plumbing.
D. Maintain a complete and accurate log of control and survey work as it progresses.

4. CUTTING AND PATCHING

A. Execute cutting and patching including excavation and fill to complete the work, to uncover work in order to install improperly sequenced work, to remove and replace defective or non-conforming work, to remove samples of installed work for testing when requested, to provide openings in the work for penetration of mechanical and electrical work, to execute patching to complement adjacent work, and to fit products together to integrate with other work.
B. Execute work by methods to avoid damage to other work, and which will provide appropriate surfaces to receive patching and finishing.
C. Employ skilled and experienced installer to perform cutting for weather exposed and moisture resistant elements, and sight exposed surfaces.
D. Cut rigid materials using appropriate saws or drills. Pneumatic tools not allowed without prior approval.
E. Restore work with new products in accordance with requirements of Contract Documents.
F. Fit work airtight to pipes, sleeves, ducts, conduit, and other penetrations through surfaces.
G. At penetrations of fire rated walls, partitions, ceiling, or floor construction, completely seal voids with fire rated material to full thickness of the penetrated element.
H. Refinish surfaces to match adjacent finish. For continuous surfaces, refinish to nearest intersection or natural break. For an assembly, refinish entire unit.

5. PROTECTION OF INSTALLED WORK

A. Protect installed work from damage by construction operations.
B. Protect finished floors, stairs, and other surfaces from traffic, dirt, wear, damage, or movement of heavy objects, by protecting with durable sheet materials.
C. Prohibit traffic or storage upon waterproofed or roofed surfaces. If traffic or activity is necessary, obtain recommendations for protection from waterproofing or roofing material manufacturer.

6. SYSTEMS STARTUP

A. Coordinate schedule for start-up of various equipment and systems.
B. Verify that each piece of equipment or system has been checked for proper lubrication, drive rotation, belt tension, control sequence, and for conditions which may cause damage.
C. Verify tests, meter readings, and specified electrical characteristics agree with those required by the equipment or system manufacturer.
D. Verify that wiring and support components for equipment are complete and tested.
E. Execute start-up under supervision of applicable Contractor personnel and/or manufacturer's representative in accordance with manufacturers' instructions.
F. Use manufacturer's start up procedures as applicable and submit signed copy to Owner's Construction Manager.
G. Submit a written report that equipment or system has been properly installed and is functioning correctly.

7. DEMONSTRATION AND INSTRUCTION

A. Demonstrate start-up, operation, control, adjustment, trouble-shooting, servicing, maintenance, and shutdown of each item of equipment at scheduled time, at equipment location.
B. For equipment or systems requiring seasonal operation, perform demonstration for other season within six months.

8. CLEANING

A. Construction Cleanup Checklist:
1. Comply with and submit to the Owner two signed copies of the "Construction Clean-up Expectations" checklist at least one day prior to construction completion date. A copy of the checklist is attached as Exhibit "L" to the contract.

B. Progress Cleaning:
1. Maintain areas free of waste materials, debris, and rubbish. Maintain site in a clean and orderly condition.
2. Remove debris and rubbish from pipe chases, plenums, attics, crawl spaces, and other closed or remote spaces, prior to enclosing the space.
3. Broom and vacuum clean interior areas prior to start of surface finishing and continue cleaning to eliminate dust.
4. Collect and remove waste materials, debris, and trash/rubbish from site weekly and dispose off-site; do not burn or bury.

C. Final Cleaning:
1. Use cleaning materials that are non-hazardous.
2. Clean interior and exterior glass, surfaces exposed to view; remove labels, stains and foreign substances, polish transparent and glossy surfaces, vacuum carpeted and soft surfaces.
3. Clean equipment and fixtures to a sanitary condition with cleaning materials appropriate to the surface and material being cleaned.
4. Clean filters of operating equipment.
5. Clean debris from roofs, gutters, downspouts, and drainage systems.
6. Clean site; sweep paved areas, rake clean landscaped surfaces.
7. Remove waste, surplus materials, trash/rubbish, and construction facilities from the site; dispose of in legal manner; do not burn or bury.
8. Hospital Operating Room clean is considered minimum standard.

D. Cleaning Schedule:
1. In addition to the daily building and site cleaning noted above, the General Contractor is to include three complete cleanings. Cleanings are to be scheduled as possible:
a. 1st complete cleaning of building and site at time of punch list.
b. 2nd cleaning shall be a re-clean of the building and site prior to completion of punch list and turnover.
c. 3rd cleaning shall consist of a complete top to bottom, inside and out, final cleaning at night during training at a date set by the Owner's Construction Manager.
2. The Scheduled Cleanings shall consist of, but not be limited to, the following:
a. Site:
1) Landscaping: no labels or tags to remain on plants, shrubs, trees, etc… and all debris removed.
2) Paving: Power washed, clean, no tire or wheel marks, no stains or discolorations and no caulking runs.
3) Sidewalks: No power wash allowed for sidewalks; deck brush with cleaner only.
4) All traffic control signs, and post have all labels removed.
b. Exterior:
1) No labels visible on the window blinds from the exterior.
2) Glass cleaned spotless.
3) Brick, Stone and EIFS/Stucco washed down.
4) Awnings, cap flashings and other metals clean, dust free and spot free.
5) Window sills and flashings cleaned of all mortar, etc.
c. Roof:
1) No fire rating tags or supply tags in roof shingles.
2) Roofing materials washed with soft deck brush and Tide with bleach solution or equivalent.
3) Roof top equipment washed and dust free.
d. Interior:
1) Cleaning completed so that all surfaces, regardless if visible or not, are clean and dust free and the interior of the building is will remain clean and dust free for two days minimum.
2) Restroom fixtures sanitized.
3) Windows, mirrors, and all glass spotless.
4) All stickers removed from light fixtures, window blinds, TV's, equipment of any kind and all protective wrap removed of any kind.
5) Clean outs, floor drains and floor sinks polished.
6) Interiors of all cabinets, behind grills, undersides of shelving, top of ice machines, etc…, clean and dust free,
7) Undersides of all table brackets dust free.

9. CLOSEOUT PROCEDURES

A. Accompany Owner on preliminary inspection to determine items to be listed for completion or correction in Contractor's Notice of Substantial Completion.
B. Notify Owner when work is considered ready for Substantial Completion.
C. Correct items of work listed in executed Certificates of Substantial Completion and comply with requirements for access to Owner-occupied areas.
D. Notify Owner when work is considered finally complete.

10. PROJECT SUPERVISION AFTER SUBSTANTIAL COMPLETION

A. Project superintendent shall remain on site through completion of punch list.

SECTION 01720 - CONSTRUCTION LAYOUT

1. SUMMARY

A. Section Includes:
1. Layout of work.
2. Land-survey work.

2. SUBMITTALS

A. Certificates: Submit a certificate signed by the land surveyor certifying the location and elevation of improvements.
B. Final Property Survey: Submit 5 copies of the final property survey along with electronic files; both AutoCAD and PDF formats.
C. Project Record Drawings: Submit a record of work performed and record survey data as required under provisions of Sections 01300 and 01780.

3. QUALITY ASSURANCE

A. Surveyor Qualifications: Engage a land surveyor registered in the state where the Project is located to perform required land-surveying services.
B. Do not begin construction until layout of work is reviewed by the land surveyor.

4. EXAMINATION

A. Identify existing control points and property line corner stakes.
B. Verify layout information shown on the Drawings, in relation to the property survey and existing benchmarks, before proceeding to lay out the Work. Locate and protect existing benchmarks and control points. Preserve permanent reference points during construction.
1. Do not change or relocate benchmarks or control points without prior written approval. Promptly report lost or destroyed reference points or requirements to relocate reference points because of necessary changes in grades or locations.
2. Promptly replace lost or destroyed Project control points. Base replacements on the original survey control points.
C. Establish and maintain a minimum of 2 permanent benchmarks on the site, referenced to data established by survey control points.
1. Record benchmark locations, with horizontal and vertical data, on Project Record Documents.
D. Existing Utilities and Equipment: Before beginning site construction, investigate and verify the existence and location of underground utilities and other construction. Verify the location and invert elevation at points of connection of sanitary sewer, storm sewer, and water-service piping.

5. PERFORMANCE

A. Work from lines and levels established by the property survey. Establish benchmarks and markers to set lines and levels as needed to locate each element of the Project. Do not scale Drawings to determine dimensions.
1. Advise sub-contractors of marked lines and levels provided for their use.
2. As construction proceeds, check each major element for line, level, and plumb.
B. Surveyor's Log: Maintain a surveyor's log of control and other survey work. Make this log available for reference.
1. Record deviations from required lines and levels, and advise the Owner when deviations that exceed indicated or recognized tolerances are detected. On Project Record Drawings, record deviations that are accepted and not corrected.
C. Building Lines and Levels: Locate and lay out batter boards for structures, building foundations, column grids and locations, floor levels, and control lines and levels required for mechanical and electrical work.
D. Site Improvements: Locate and lay out site improvements, including pavements, stakes for grading, fill and topsoil placement, utility slopes, and invert elevations.
E. Existing Utilities: Furnish information necessary to adjust, move, or relocate existing structures, utility poles, lines, services, or other appurtenances located in or affected by construction. Coordinate with local authorities having jurisdiction.
F. Final Property Survey: Prepare a final property survey showing significant features (real property) for the Project. Include on the survey a certification, signed by the surveyor, that principal metes, bounds, lines, and levels of the Project are accurately positioned as shown on the survey.

SECTION 01780 - CLOSEOUT SUBMITTALS

1. SUBMITTALS

A. Project Record Documents: Submit documents to Owner with claim for final Application for Payment.
B. Operation and Maintenance Data:
1. Submit two copies of preliminary draft or proposed formats and outlines of contents before start of Work. Owner's Construction Manager will review draft and return one copy with comments.
2. For equipment, or component parts of equipment put into service during construction and operated by Owner, submit completed documents within ten days after acceptance.
3. Submit two sets of revised final documents in final form, both hard and electronic formats, within 10 days after final inspection.
C. Warranties and Bonds:
1. For equipment or component parts of equipment put into service during construction with Owner's permission, submit documents within ten days after acceptance.
2. Make other submittals within ten days after Date of Substantial Completion, prior to final Application for Payment.
3. For items of Work for which acceptance is delayed beyond Date of Substantial Completion, submit within ten days after acceptance, listing the date of acceptance as the beginning of the warranty period.
4. All Warranties shall start as of restaurant "Opening Day".

2. PROJECT RECORD DOCUMENTS

A. Maintain on site one set of the following record documents; record actual revisions to the Work:
1. Drawings.
2. Specifications.
3. Addenda.
4. Change Orders and other modifications to the Contract.
5. Reviewed shop drawings, product data, and samples.
6. Manufacturer's instruction for assembly, installation, and adjusting.
B. Ensure entries are complete and accurate, enabling future reference by Owner.
C. Store record documents separate from documents used for construction.
D. Record information concurrent with construction progress.
E. Specifications: Legibly mark and record at each product section description of actual products installed, including the following:
1. Manufacturer's name and product model and number.
2. Product substitutions or alternates utilized.
3. Changes made by Addenda and modifications.
F. Record Drawings and Shop Drawings: Legibly mark each item to record actual construction including:
1. Measured depths of foundations in relation to finish first floor datum.
2. Measured horizontal and vertical locations of underground utilities and appurtenances, referenced to permanent surface improvements.
3. Measured locations of internal utilities and appurtenances concealed in construction, referenced to visible and accessible features of the Work.
4. Field changes of dimension and detail.
5. Details not on original Contract drawings.

3. OPERATION AND MAINTENANCE DATA

A. For Each Product or System on forms provided by Owner: List names, addresses and telephone numbers of Subcontractors and suppliers, including local source of supplies and replacement parts.
B. Product Data: Mark each sheet to clearly identify specific products and component parts, and data applicable to installation. Delete inapplicable information.
C. Drawings: Supplement product data to illustrate relations of component parts of equipment and systems, to show control and flow diagrams. Do not use Project Record Documents as maintenance drawings.
D. Typed Text: As required to supplement product data. Provide logical sequence of instructions for each procedure, incorporating manufacturer's instructions.

4. OPERATION AND MAINTENANCE DATA FOR MATERIALS AND FINISHES

A. Instructions for Care and Maintenance: Manufacturer's recommendations for cleaning agents and methods, precautions against detrimental cleaning agents and methods, and recommended schedule for cleaning and maintenance.

5. OPERATION AND MAINTENANCE DATA FOR EQUIPMENT AND SYSTEMS

A. For Each Item of Equipment and Each System:
1. Description of unit or system, and component parts.
2. Identify function, normal operating characteristics, and limiting conditions.
3. Complete nomenclature and model number of replaceable parts.
B. Panel board Circuit Directories: Provide electrical service characteristics, controls, and communications; typed.
C. Operating Procedures: Include start-up, break-in, and routine normal operating instructions and sequences. Include regulation, control, stopping, shut-down, and emergency instructions. Include summer, winter, and any special operating instructions.
D. Maintenance Requirements: Include routine procedures and guide for preventative maintenance and troubleshooting; disassembly, repair, and reassembly instructions; and alignment, adjusting, balancing, and checking instructions.
E. Include manufacturer's printed operation and maintenance instructions.
F. Include sequence of operation by controls manufacturer.
G. Provide original manufacturer's parts list, illustrations, assembly drawings, and diagrams required for maintenance.
H. Provide framed information as follows. All information shall be framed in black metal frames.
1. Subcontractor list and service company contact information (to be located in office)
2. Warranty procedure information (located in office)
3. Legend and locations of labels on valves and knobs in mechanical room (located in mechanical room)
4. Map of zones for irrigation system located with irrigation controls.

6. OPERATION AND MAINTENANCE MANUALS

A. Prepare instructions and data by personnel experienced in maintenance and operation of described products in the form of an instructional manual.
B. Binders: Commercial quality, 8-1/2 x 11 inch three D side ring binders with durable plastic covers; 2 inch maximum ring size. When multiple binders are used, correlate data into related consistent groupings.
C. Cover: Identify each binder with typed or printed title OPERATION AND MAINTENANCE INSTRUCTIONS; identify title of Project; identify subject matter of contents.
D. Provide tabbed dividers for each separate product and system, with typed description of product and major component parts of equipment.
E. Arrange content by systems under section numbers and sequence of Table of Contents of this Project Manual.
F. Contents: Prepare a Table of Contents for each volume, with each product or system description identified with tabbed dividers, in three parts as follows:
1. Part 1: Directory, listing names, addresses, and telephone numbers of Owner's Construction Manager, Contractor, Subcontractors, and major equipment suppliers.
2. Part 2: Operation and maintenance instructions, arranged by system and subdivided by specification section. For each category, identify names, addresses, and telephone numbers of Subcontractors and suppliers. Identify the following:
a. Significant design criteria.
b. List of equipment.
c. Parts list for each component.
d. Operating instructions.
e. Maintenance instructions for equipment and systems.

ARCHITECT:

DAVID SCOTT WINDLE, AIA

6201 CAMPUS CIRCLE DRIVE E.
IRVING, TEXAS 75038
TEL: 972.870.1288
WWW.IDSTUDIO4.COM
E-MAIL scottw@idstudio4.com

CORPORATE:
BRINKER RESTAURANT CORPORATION,
A VIRGINIA CORPORATION
3000 OLYMPUS BLVD.
DALLAS, TEXAS 75019
972.980.9917
www.brinker.com

09/23/2024
ISSUE FOR BID
THESE DOCUMENTS ARE FOR BIDDING PURPOSES ONLY. DO NOT USE FOR CONSTRUCTION.

RESTAURANT #CH1679
PROTOTYPE 18.5FS

CHILI'S TOOELE
951 N MAIN STREET
TOOELE, UT 84074

CLIENT: BRINKER RESTAURANT CORP.
A VIRGINIA CORPORATION

DATE	DESCRIPTION
6/27/2024	ISSUE FOR PERMIT
9/23/2024	ISSUE FOR BID

⚠	DATE	DESCRIPTION

PROJECT NUMBER:
CHI24007

SHEET TITLE:
SPECIFICATIONS
01312 - 01780

SHEET NUMBER:
SP101

f. Maintenance instructions for special finishes, including recommended cleaning methods and materials, and special precautions identifying detrimental agents.
3. Part 3: Project documents and certificates, including the following:
a. Shop drawings and product data.
b. Certificates.

7. WARRANTIES AND BONDS

A. Obtain warranties and bonds, executed in duplicate by responsible Subcontractors, suppliers, and manufacturers, within ten days after completion of the applicable item of work.
B. Verify that documents are in proper form, contain full information, and are notarized.
C. Co-execute submittals when required.
D. Manual: Bind in commercial quality 8-1/2 x 11 inch three D side ring binders with durable plastic covers.
E. Cover: Identify each binder with typed or printed title WARRANTIES AND BONDS, with title of Project; name, address and telephone number of Contractor and equipment supplier; and name of responsible company principal.
F. Table of Contents: Neatly typed, in the sequence of the Table of Contents of the Project Manual, with each item identified with the number and title of the specification section in which specified, and the name of product or work item.
G. Separate each warranty or bond with index tab sheets keyed to the Table of Contents listing. Provide full information, using separate typed sheets as necessary. List Subcontractor, supplier, and manufacturer, with name, address, and telephone number of responsible principal.
H. At contractor's option, warranty and bond information can be provided electronically in PDF format on a Compact Disk.

DIVISION 02 - SITEWORK

SECTION 02010 - SUBSURFACE INVESTIGATION

1. SUBSURFACE INVESTIGATION

A. Geotechnical investigation (subsurface soil tests) for the project site has been performed and a report of that investigation has been completed. The consultant's report presents his conclusions on subsurface conditions, based on his interpretations of the data obtained in the investigation. The Contractor acknowledges that he has reviewed the consultant's report and any addenda thereto, and that his Bid for excavation operations, including all necessary rock removal, is based on subsurface condition as described in that report. It is recognized that a subsurface investigation may not disclose all conditions, as they actually exist between the time of a subsurface investigation and the time of excavation operations. In recognition of these facts, this clause is entered in the Contract to provide a means of equitable additional compensation for the Contractor if adverse unanticipated conditions are encountered, and to provide a means of rebate to the Owner if the conditions are more favorable than anticipated.

B. Requirements:
1. Contractor shall refer to all recommendation and findings as set forth in soils geotechnical report. The Owner and/or Architect accept no responsibility for the accuracy of the findings or for the final recommendations. Existing elevations and locations to be joined shall be verified by the contractor before construction. Contractor shall notify the Owner so that modifications can be made before proceeding with the work.
.
2. At any point in time during excavation operations that the Contractor encounters conditions that are different than those anticipated by the foundation consultant's report, he shall immediately (within 24 hours) bring this fact to the Owners attention. Once a fact of unanticipated conditions has been brought to the attention of the Owner, and the consultant has concurred, immediate negotiations will be undertaken between the Owner and the Contractor to arrive at a change in contract price for additional work or reduction in work because of the unanticipated conditions. The Contractor agrees that his stated unit price would apply for additional or reduced work under the Contract.

SECTION 02100 - SITE CLEARING

1. SECTION INCLUDES

A. Surface debris removal
B. Topsoil stripping and storage
C. Grubbing
D. Tree Removal

2. REGULATORY REQUIREMENTS

A. Governing Authorities: Conform to applicable codes for disposal of debris.
B. Utilities: Coordinate work of this Section with utility companies.

3. EXAMINATION OF SITE

A. Contractor shall visit and examine the site to ascertain the actual nature and scope of any demolition work with Owner's Construction Manager. Later claims for additional compensation covering difficulties encountered in demolition work will not be recognized.

4. GENERAL

A. Remove trees, grass, weeds, roots, and other vegetation from the areas to be excavated, filled, or graded. Consult with Owner prior to beginning removal of trees and/or shrubs. All trees/shrubs that are to remain should be marked. Notify utility companies when working in areas where utility lines might be encountered. Utilities must be marked both on ground with flags and or paint and on main site plans.

4. PROTECTION

A. Protect utilities, benchmarks and existing structures, trees, and features, designated to remain, from damage or displacement.

5. CLEARING

A. Surface Debris: Remove debris (trash, loose stone, broken concrete, etc.) inside property lines prior to beginning topsoil stripping.
B. Topsoil Stripping:
1. General: Remove brush, roots, grass, rocks and weeds before stripping.
2. Depth: Remove topsoil to minimum depth of 8 inches in areas indicated on the Drawings as buildings, drives, parking, walks and other paving.
3. Storage: Store topsoil acceptable as fill in planting areas in neat piles at locations on site. Cover topsoil to keep weather from dispersing it. Arrange storage to avoid interference with building operations. Do not store topsoil containing debris, stones, or subsoil. Remove excess and/or unacceptable topsoil from site.
C. Grubbing:
1. General: Remove foundations, trash, stumps, old lumber, structures, etc. located either above, on the surface, or below ground which may interfere with new construction.
2. Depth: Remove obstructions completely within work area completely in areas to be covered by buildings and to a depth of 24 inches in areas to be planted, sodded, or surfaced, unless shown otherwise on the Drawings.
3. Existing Paving: Remove curbs, gutters, and paving including base material located within and outside property lines where shown on the Drawings.

6. TREE REMOVAL

A. Remove trees stumps and roots from area to be occupied by new construction and where shown on the Drawings. Use methods of removal which will prevent injury to persons, damage to property, or injury to adjacent natural growth.

SECTION 02200 – EXCAVATION, BACKFILLING COMPACTION AND GRADING

The following are general guidelines for excavation, backfilling, compaction and grading. When not specifically addressed in the Civil construction documents, contractor shall comply with the provisions herein.

1. SECTION INCLUDES
A. Preparing sub grades for slabs-on-grade, walks, pavements, lawns, and plantings.
B. Excavating and backfilling for buildings and structures.
C. Drainage course for slabs-on-grade.
D. Subbase course for concrete walks and all pavement types.
E. Subsurface drainage backfill.
F. Finish Grading and Topsoil.

2. SUBMITTALS
A. Material Test Reports: From an owner qualified testing agency indicating and interpreting test results for compliance of the following with requirements indicated:
1. Classification according to ASTM D 2487 of each on-site or borrow soil material proposed for fill and backfill.
2. Laboratory compaction curve according to ASTM D 698 for each on-site or borrow soil material proposed for fill and backfill.
3. Laboratory compaction curve according to ASTM D 1557 for each on-site or borrow soil material proposed for fill and backfill.
B. Seismic survey agency report, for record purposes.

3. PROJECT CONDITIONS

A. Existing Utilities: Do not interrupt utilities serving facilities occupied by Owner or others unless permitted in writing by Owner and then only after arranging to provide temporary utility services according to requirements indicated:
1. Notify Owner not less than two days in advance of proposed utility interruptions.
2. Do not proceed with utility interruptions without Owner's written permission.
3. Contact utility-locator service for area where Project is located before excavating.
B. Demolish and completely remove from site existing underground utilities indicated to be removed. Coordinate with utility companies to shut off services if lines are active.

4. SOIL MATERIALS

A. General: Provide borrow soil materials when sufficient satisfactory soil materials are not available from excavations.
B. Satisfactory Soils: ASTM D 2487 soil classification groups GW, GP, GM, SW, SP, and SM, or a combination of these group symbols; free of rock or gravel larger than 3 inches in any dimension, debris, waste, frozen materials, vegetation, and other deleterious matter.
C. Unsatisfactory Soils: ASTM D 2487 soil classification groups GC, SC, ML, MH, CL, CH, OL, OH, and PT, or a combination of these group symbols:
1. Unsatisfactory soils also include satisfactory soils not maintained within 2 percent of optimum moisture content at time of compaction.
D. Backfill and Fill: Satisfactory soil materials.
E. Subbase: Naturally or artificially graded mixture of natural or crushed gravel, crushed stone, and natural or crushed sand; ASTM D 2940; with at least 90 percent passing a 1-1/2- inch sieve and not more than 12 percent passing a No. 200 sieve.
F. Base: Naturally or artificially graded mixture of natural or crushed gravel, crushed stone, and natural or crushed sand; ASTM D 2940; with at least 95 percent passing a 1-1/2-inch sieve and not more than 8 percent passing a No. 200 sieve.
G. Engineered Fill: Naturally or artificially graded mixture of natural or crushed gravel, crushed stone, and natural or crushed sand; ASTM D 2940; with at least 90 percent passing a 1-1/2-inch sieve and not more than 12 percent passing a No. 200 sieve.
H. Bedding: Naturally or artificially graded mixture of natural or crushed gravel, crushed stone, and natural or crushed sand; ASTM D 2940; except with 100 percent passing a 1-inch sieve and not more than 8 percent passing a No. 200 sieve.
I. Drainage Fill: Washed, narrowly graded mixture of crushed stone, or crushed or uncrushed gravel; ASTM D 448; coarse-aggregate grading Size 57; with 100 percent passing a 1-1/2- inch sieve and 0 to 5 percent passing a No. 8 sieve.
J. Filter Material: Narrowly graded mixture of natural or crushed gravel, or crushed stone and natural sand; ASTM D 448; coarse-aggregate grading Size 67; with 100 percent passing a 1-inch sieve and 0 to 5 percent passing a No. 4 sieve.
K. Impervious Fill: Clayey gravel and sand mixture capable of compacting to a dense state.

5. ACCESSORIES

A. Drainage Fabric: Nonwoven geotextile, specifically manufactured as a drainage geotextile; made from polyolefins, polyesters, or polyamides; and with the following minimum properties determined according to ASTM D 4759.
B. Separation Fabric: Woven geotextile, specifically manufactured for use as a separation geotextile; made from polyolefins, polyesters, or polyamides; and with the following minimum properties determined according to ASTM D 4759.

6. DEWATERING

A. Prevent surface water and ground water from entering excavations, from ponding on prepared subgrades, and from flooding Project site and surrounding area.
B. Protect subgrades from softening, undermining, washout, and damage by rain or water accumulation.
1. Reroute surface water runoff away from excavated areas. Do not allow water to accumulate in excavations.
2. Install a dewatering system to keep subgrades dry and convey ground water away from excavations. Maintain until dewatering is no longer required.

7. EXCAVATION FOR STRUCTURES

A. Excavate to indicated elevations and dimensions within a tolerance of plus or minus 1 inch. Extend excavations a sufficient distance from structures for placing and removing concrete formwork, for installing services and other construction, and for inspections.
1. Excavations for Footings and Foundations: Do not disturb bottom of excavation. Excavate by hand to final grade just before placing concrete reinforcement. Trim bottoms to required lines and grades to leave solid base to receive other work.
2. Excavation for Underground Tanks, Basins, and Mechanical or Electrical Utility Structures: Excavate to elevations and dimensions indicated within a tolerance of plus or minus 1 inch. Do not disturb bottom of excavations intended for bearing surface.

8. EXCAVATION FOR UTILITY TRENCHES

A. Excavate trenches to indicated gradients, lines, depths, and elevations.
1. Beyond building perimeter, excavate trenches to allow installation of top of pipe below frost line.
B. Excavate trenches to uniform widths to provide a working clearance on each side of pipe or conduit. Excavate trench walls vertically from trench bottom to 12 inches higher than top of pipe or conduit, unless otherwise indicated.
1. Clearance: 12 inches on each side of pipe or conduit.
C. Trench Bottoms: Excavate and shape trench bottoms to provide uniform bearing and support of pipes and conduit. Shape subgrade to provide continuous support for bells, joints, and barrels of pipes and for joints, fittings, and bodies of conduits. Remove projecting stones and sharp objects along trench subgrade.
1. For pipes and conduit less than 6 inches in nominal diameter and flat-bottomed, multiple-duct conduit units, hand-excavate trench bottoms and support pipe and conduit on an undisturbed subgrade.
2. For pipes and conduit 6 inches or larger in nominal diameter, shape bottom of trench to support bottom 90 degrees of pipe circumference. Fill depressions with tamped sand backfill.
3. Excavate trenches 6 inches deeper than elevation required in rock or other unyielding bearing material to allow for bedding course.
D. Trench Bottoms: Excavate trenches 4 inches deeper than bottom of pipe elevation to allow for bedding course. Hand excavate for bell of pipe.
1. Excavate trenches 6 inches deeper than elevation required in rock or other unyielding bearing material to allow for bedding course.

9. BACKFILL

A. Place and compact backfill in excavations promptly, but not before completing the following:
1. Construction below finish grade including, where applicable, dampproofing, waterproofing, and perimeter insulation.
2. Surveying locations of underground utilities for record documents.
3. Inspecting and testing underground utilities.
4. Removing concrete formwork.
5. Removing trash and debris.
6. Removing temporary shoring and bracing, and sheeting.
7. Installing permanent or temporary horizontal bracing on horizontally supported walls.

10. UTILITY TRENCH BACKFILL

A. Place and compact bedding course on trench bottoms and where indicated. Shape bedding course to provide continuous support for bells, joints, and barrels of pipes and for joints, fittings, and bodies of conduits.
B. Backfill trenches excavated under footings and within 18 inches of bottom of footings; fill with concrete to elevation of bottom of footings.
C. Provide 4-inch- thick, concrete-base slab support for piping or conduit less than 30 inches below surface of roadways. After installing and testing, completely encase piping or conduit in a minimum of 4 inches of concrete before backfilling or placing roadway subbase.
D. Place and compact initial backfill of subbase material, free of particles larger than 1 inch to a height of 12 inches over the utility pipe or conduit.
E. Install warning tape directly above utilities, 12 inches below finished grade, except 6 inches below subgrade under pavements and slabs.

11. MOISTURE CONTROL

A. Uniformly moisten or aerate subgrade and each subsequent fill or backfill layer before compaction to within 2 percent of optimum moisture content.
1. Do not place backfill or fill material on surfaces that are muddy, frozen, or contain frost or ice.
2. Remove and replace, or scarify and air-dry, otherwise satisfactory soil material that exceeds optimum moisture content by 2 percent and is too wet to compact to specified dry unit weight.

12. COMPACTION OF BACKFILLS AND FILLS

A. Place backfill and fill materials in layers not more than 8 inches in loose depth for material compacted by heavy compaction equipment, and not more than 4 inches in loose depth for material compacted by hand-operated tampers.
B. Place backfill and fill materials evenly on all sides of structures to required elevations, and uniformly along the full length of each structure.
C. Compact soil to not less than the following percentages of maximum dry unit weight according to ASTM D 698:
1. Under structures, building slabs, walkways, and pavements, scarify and recompact top 12 inches of existing subgrade and each layer of backfill or fill material at 95 percent.

13. GRADING

A. General: Uniformly grade areas to a smooth surface, free from irregular surface changes. Comply with compaction requirements and grade to cross sections, lines, and elevations indicated.
1. Provide a smooth transition between adjacent existing grades and new grades.
2. Cut out soft spots, fill low spots, and trim high spots to comply with required surface tolerances.
B. Site Grading: Slope grades to direct water away from buildings and to prevent ponding. Finish subgrades to required elevations within the following tolerances:
1. Walks, Lawns, or Unpaved Areas: Plus or minus 1 inch.
2. Pavements: Plus or minus 1/2 inch.
C. Topsoil:
1. General: Provide a 6-inch layer of topsoil, unless shown otherwise on the Drawings, in areas noted "planting" and in other areas where existing topsoil has been disturbed or otherwise made unusable.
2. Placing: Use topsoil in relatively dry state. Place during dry weather. Fine grade eliminating rough or low areas. Maintain levels, profiles, and contours of subgrade. Remove stone, roots, grass, weeds, debris, and foreign material while spreading. Manually spread around trees, plants, buildings, etc. to prevent damage. Lightly compact placed topsoil.

14. SUBSURFACE DRAINAGE

A. Subsurface Drain: Place a layer of drainage fabric around perimeter of drainage trench as indicated. Place a 6-inch course of filter material on drainage fabric to support drainage pipe. Encase drainage pipe in a minimum of 12 inches of filter material and wrap in drainage fabric, overlapping sides and ends at least 6 inches.
1. Compact each course of filter material to 95 percent of maximum dry unit weight according to ASTM D 698.
B. Drainage Backfill: Place and compact filter material over subsurface drain, in width indicated, to within 12 inches of final subgrade. Overlay drainage backfill with one layer of drainage fabric, overlapping sides and ends at least 6 inches.
1. Compact each course of filter material to 95 percent of maximum dry density according to ASTM D 698.
2. Place and compact impervious fill material over drainage backfill to final subgrade.

15. FIELD QUALITY CONTROL

A. Testing Agency: Owner will engage a qualified independent geotechnical engineering testing agency to perform field quality-control testing.
B. Allow testing agency to inspect and test subgrades and each fill or backfill layer. Proceed with subsequent earthwork only after test results for previously completed work comply with requirements.
C. Footing Subgrade: At footing subgrades, at least one test of each soil stratum will be performed to verify design bearing capacities.
D. Testing agency will test compaction of soils in place according to ASTM D 1556, ASTM D 2167, ASTM D 2922, and ASTM D 2937, as applicable. Tests will be performed at the following locations and frequencies:
1. Paved and Building Slab Areas: At subgrade and at each compacted fill and backfill layer, at least one test for every 2000 sq. ft. or less of paved area or building slab, but in no case fewer than three tests.
2. Foundation Wall Backfill: At each compacted backfill layer, at least one test for each 100 feet or less of wall length, but no fewer than two tests.
3. Trench Backfill: At each compacted initial and final backfill layer, at least one test for each 150 feet or less of trench length, but no fewer than two tests.
E. When testing agency reports that subgrades, fills, or backfills have not achieved degree of compaction specified, scarify, and moisten or aerate, or remove and replace soil to depth required; recompact and retest until specified compaction is obtained.

16. DISPOSAL OF SURPLUS AND WASTE MATERIALS

A. Disposal: Transport surplus satisfactory soil to designated storage areas on Owner's property. Stockpile or spread soil as directed by Owner.
1. Remove waste material, including unsatisfactory soil, trash, and debris, and legally dispose of it off Owner's property.

SECTION 02361 - TERMITE CONTROL

1. SUMMARY

A. This Section includes the following:
1. Soil treatment with termiticide.
2. Wood treatment with borate.

2. REFERENCES

A. Title 7, United States Code, 136 through 136y - Federal Insecticide, Fungicide and Rodenticide Act; United States Code; 1947 (Revised 2001).

3. REGULATORY REQUIREMENTS

A. Conform to applicable code for requirements for application and comply with EPA regulations.
B. Provide certificate of compliance from authority having jurisdiction indicating approval of toxicants.

4. SEQUENCING AND REPORTING

A. Apply toxicant immediately prior to installation of vapor barrier under slabs-on-grade.
B. Soil Treatment Application Report: Include the following:
1. Date and time of application.
2. Moisture content of soil before application.
3. Brand name and manufacturer of termiticide.
4. Quantity of undiluted termiticide used.
5. Dilutions, methods, volumes, and rates of application used.
6. Areas of application.
7. Water source for application.
C. Wood Treatment Application Report: Include the following:
1. Date and time of application.
2. Brand name and manufacturer of borate.
3. Quantity of undiluted borate used.
4. Dilutions, methods, volumes, and rates of application used.
5. Areas of application.

5. WARRANTY

A. Provide five-year installer's warranty against damage to building caused by termites.
1. Include coverage for repairs to building and to contents damaged due to building damage. Repair damage and, if required, re-treat.
2. Inspect annually and report in writing to Owner. Provide inspection service for five (5) years from Date of Substantial Completion.

6. SUBMITTALS

A. Submittal Procedures
1. Product Data: Indicate toxicants to be used, composition by percentage, dilution schedule, and intended application rate.
2. Assurance/Control Submittals:
a. Certificates:
1) Manufacturer's certificate that Products meet or exceed specified requirements.
2) Certification that Products comply with EPA regulations for Pesticides.
3) Certification that Products conform to requirements of local authority having jurisdiction.
b. Qualification Documentation: Submit documentation of experience indicating compliance with specified qualification requirements.
c. Applicator must be licensed with local authority having jurisdiction.

7. MANUFACTURERS

A. Subject to compliance with requirements, manufacturers offering products that may be incorporated into the Work include, but are not limited to, the following:
1. Termiticides (Soil Treatment):
a. Aventis Environmental Science USA LP; Termidor.
b. Bayer Corporation; Premise 75.
c. Dow AgroSciences LLC; Dursban TC or Equity.
d. FMC Corporation, Agricultural Products Group; Talstar, Prevail FT, or Torpedo.
e. Syngenta; Demon TC.
2. Borates (Wood Treatment):
a. Tim-Bor Professional (Octaborate powder).

8. MIXES

A. Toxicant Chemicals: EPA approved; synthetically color dyed to permit visual identification of soil treatment.
B. Diluent: Recommended by toxicant manufacturer.
C. Mix toxicant to manufacturer's instructions.

9. EXAMINATION

A. Verify that soil surfaces are unfrozen, sufficiently dry to absorb toxicant, and ready to receive treatment.
B. Verify final grading is complete.

10. SOIL TREATMENT

A. Termiticide: Provide an EPA-registered termiticide complying with requirements of authorities having jurisdiction, in an aqueous solution formulated to prevent termite infestation. Provide quantity required for application at the label volume and rate for the maximum termiticide concentration allowed for each specific use, according to product's EPA-Registered Label.
B. Preparation:
1. General: Remove all extraneous sources of wood cellulose and other edible materials such as wood debris, tree stumps and roots, stakes, formwork, and construction waste wood from soil within and around foundations.
2. Soil Treatment Preparation: Loosen, rake, and level soil to be treated except previously compacted areas under slabs and footings. Termiticides may be applied before placing compacted fill under slabs if recommended in writing by termiticide manufacturer.
C. Application: Mix soil treatment termiticide solution to a uniform consistency. Provide quantity required for application at the label volume and rate for the maximum specified concentration of termiticide, according to manufacturer's EPA-Registered Label, to the following so that a continuous horizontal and vertical termiticidal barrier or treated zone is established around and under building construction. Distribute treatment evenly.
1. Slabs-on-Grade: Under ground-supported slab construction, including footings, building slabs, and attached slabs as an overall treatment. Treat soil materials before concrete footings and slabs are placed.
2. Foundations: Adjacent soil including soil along the entire inside perimeter of foundation walls, along both sides of interior partition walls, around plumbing pipes and electric conduit penetrating the slab, and around interior column footers, piers, and chimney bases; also along the entire outside perimeter, from grade to bottom of footing. Avoid soil washout around footings.
3. Crawlspaces: Soil under and adjacent to foundations as previously indicated. Treat adjacent areas including around entrance platform, porches, and equipment bases. Apply overall treatment only where attached concrete platform and porches are on fill or ground.
4. Masonry: Treat voids.
5. Penetrations: At expansion joints, control joints, and areas where slabs will be penetrated.

D. Avoid disturbance of treated soil after application. Keep off treated areas until completely dry.

E. Protect termiticide solution, dispersed in treated soils and fills, from being diluted until ground-supported slabs are installed. Use waterproof barrier according to EPA-Registered Label instructions.

F. Post warning signs in areas of application.

G. Reapply soil treatment solution to areas disturbed by subsequent excavation, grading, landscaping, or other construction activities following application.

H. Apply extra treatment to structure penetration surfaces such as pipe or ducts, and soil penetrations such as grounding rods or posts.

I. Do not permit soil grading over treated work.

11. BORATE TREATMENT

A. Provide an EPA-registered borate complying with requirements of authorities having jurisdiction, in an aqueous solution for spray, formulated to prevent termite infestation in wood. Provide quantity required for application at the label volume and rate for the maximum diffusible borate concentration allowed for each specific use, according to product's EPA-Registered Label.

B. Application: Mix wood treatment borate solution to a uniform consistency. Provide quantity required for application at the label volume and rate for the maximum specified concentration of borate, according to manufacturer's EPA-Registered Label, so that wood framing, sheathing, siding, and structural members subject to infestation receive treatment.
1. Framing and Sheathing: Apply borate solution by spray to bare wood for complete coverage.
2. Application above grade prior to enclosing all interior and exterior wall cavities and Pre insulation to all surfaces as follows:
a. Exposed surfaces of wood or metal framing
b. Sill Plates, Base Plates, top plates
c. Exposed Sheathing or substrates
d. Electrical conduit surfaces
e. All plumbing pipe surfaces including exposed pipe insulation
f. PVC or cast-iron vent & drain systems.
3. Exterior Uncoated Wood Trim and Siding: Apply borate solution to bare wood siding. After 48 hours, apply a seal coat of paint as specified in Division 9 painting Sections.

SECTION 02505 - CONCRETE PAVING, WALKS, CURBS, GUTTERS, AND APPROACHES

1. SECTION INCLUDES
A. Concrete pedestrian traffic surfaces (walks, ramps, etc.)
B. Concrete vehicular traffic surfaces
C. Concrete curbs and gutters
D. Concrete traffic approaches

2. REFERENCE PUBLICATIONS AND STANDARDS
A. Governing Authority: Applicable standards and regulations of state and municipal agencies having governing authority over the work specified in this section shall take priority over items specified herein and shown on the drawings unless the requirements set forth herein require a superior quality work.
B. Material Standards: American Society for Testing Materials (ASTM)
C. Concrete Standards: American Concrete Institute (ACI): ACI-617 "Standard Specifications for Concrete Pavement and Bases" ACI-395 "Manual of Standard Practice for Detailing Reinforced Concrete"

3. SUBMITTALS
A. Testing Laboratory Reports: Furnish electronic copies of the test reports to the Owner indicating results of the cylinder test.

4. BASIC MATERIALS
A. Concrete and Reinforcing Steel: As Specified in CAST-IN-PLACE CONCRETE

5. MISCELLANEOUS MATERIALS
A. Air Entraining Agent: ASTM C0260, Master Builders or equal.
B. Dispersing Admixture: ASTM C-494, Master Builders or equal.
C. Curing Compound: ASTM C-309, No. 40W by A. C. Horn Company or equal.
D. Joint Filler: ASTM D1751, pre-molded fiber filler, unless shown otherwise on the drawings.
E. Joint Sealer: ASTM D-1190, Code 2351.

6. CONCRETE MIX DESIGN
A. Contractor shall employ and pay for, as a part of the contract price, the services of an Owner approved independent testing laboratory to determine actual design mix to be used, based on the following: All concrete: Minimum 3000 psi at 28 days. Refer to Structrual and Civil documents for more restrictive requirements.

7. INSPECTION OF SUBGRADE
A. Inspect subgrades prepared as specified elsewhere in these Specifications and report any deficiencies to the Owner before beginning work. Commencement of work shall indicate acceptance of subgrades by this Contractor.

8. CONSTRUCTION
A. General: Deliver and place concrete as specified in CAST-IN-PLACE CONCRETE.
B. Curbs and Gutters:
1. Configurations: Construct to cross-sectional details shown on drawings and at indicated locations. Curbs may be fully formed or pulled and troweled to configurations shown on the drawings.
2. Reinforcement: Reinforce as indicated on the drawings with continuous reinforcing bars lapped 30 bar diameters and securely tied at all splices. Metal chairs shall be used to hold the reinforcing steel in the proper plane.
3. Expansion Joints: Construct ½" wide expansion joints with joint filler across lengths of curb at all tangent points and at not more than twenty foot intervals. Construct one inch wide expansion joints with joint filler between curbs and concrete paving. All fixed objects, such as buildings, poles, pipes, catch basins, etc., within or abutting the concrete shall be separated from the concrete by expansion joints.
4. Finishing: Finish surfaces with dense uniform texture equal to burlap drag and cross-score with 1/4" deep cross joints at ten foot intervals with edges smoothed 1/8".
5. Joints: Fill expansion joints with joint filler except for space 3/4" deep at surface. After concrete has set, clean the open joint above filler and fill with joint sealer in accordance with instructions of sealer manufacturer.
C. Traffic Approaches and Vehicular Traffic Surfaces:
1. Configuration: Construct to cross-sectional details shown on drawings and at indicated locations.
2. Reinforcement: Reinforce with #3 minimum size reinforcing bars 18 inches on center both ways, unless otherwise indicated or noted on the drawings.
3. Expansion and Construction Joints: At intentional points for stoppage of concrete placing, use expansion joints. At unintentional points of stoppage of concrete placing, use continuation of reinforcing through joints. Construct ½ inch wide expansion joints with joint filler at locations shown on the drawings or at not more than twenty foot intervals each way if not shown. Construct ½ inch wide expansion joints with joint filler between curbs and concrete paving. All fixed objects, such as buildings, poles, pipes, catch basins, etc., within or abutting the concrete shall be separated from the concrete by expansion joints.
4. Joint Filling and Sealing: Fill expansion joints with joint filler except for space 3/4" deep at surface. After concrete has set, clean the open joint above filler and fill with joint sealer in accordance with instructions of sealer manufacturer.
5. Finishing: Vibrate, screed and float concrete to level and test the surface, which shall not vary over 1/4" in ten feet when tested with ten foot straight edge. Finish surface to gritty texture with burlap drag or straight continuous strokes with a stiff bristle push broom. Finish all edges smooth with 1/8" or 1/4" radius.
D. Walks:
1. Configurations: Construct to cross-sectional details shown on drawings and at indicated locations.
2. Sand Cushion: Concrete shall be placed over a sand cushion placed on the stabilized subgrade as shown on the drawings or a minimum of 4" thick if not shown on the drawings.
3. Reinforcing: Reinforce with 6 x 6 x W1.4, WWF, minimum reinforcing unless otherwise indicated or noted on the drawings.
4. Expansion Joints: Construct expansion joints as detailed in locations shown on the drawings.
5. Finishing: Finish surfaces not noted on the drawings to be finished otherwise to a "light broom" or "burlap drag" gritty surface. Tool all joints and all edges to provide a smooth border to each section or division of the walk. Finish all vertical surfaces in a manner that leaves the exposed surfaces free of "honeycombing" and form marks. Any damaged surfaces shall be repaired and stone-rubbed to match adjacent finished surfaces or replaced at Owner's Construction Manager's discretion.

9. CURING CONCRETE
A. Apply a white-pigmented type curing compound at a uniform rate of approximately 200 sq. ft./ gallon, or as recommended by curing compound manufacturer as soon as the finishing operation has been completed and the concrete has lost its water sheen. The curing procedure must protect the concrete, including all exposed surfaces against loss of moisture and rapid temperature change for a period of not less than four days from the beginning of the curing operation and without damage to, or marking of the finished concrete surface. Traffic shall not be allowed on finished concrete for a minimum period of seven days.

10. TESTING
A. Independent Testing Laboratory: Owner shall employ and pay for the services of an independent testing laboratory to perform concrete cylinder testing. Test cylinders shall be taken and cured by the Contractor and tested by the testing laboratory for each different class of concrete poured in any one day. Cylinders shall be taken in accordance with ASTM C31, and cured and tested in accordance with ASTM C39. One set of three cylinders is required for each 50 cubic yards of concrete or less, placed in any one day. One cylinder shall be tested at 7 days, one cylinder shall be tested at 28 days and one cylinder shall be held as a spare from each set of three cylinders as specified above.
B. Laboratory Tests:
1. Slump Tests: Slump tests shall be taken by the Contractor when cylinders are taken, and shall show maximum slump 5" and minimum slump 3".
2. Air Entrainment: Air content by volume: 5% to 7% based on measurements made in concrete mixtures at point of discharge at job site at time slump tests are made. Air content by volume shall be determined in accord with ASTM C231.

11. CLEANING CONCRETE
A. Concrete approaches, sidewalks and related work shall be hosed down with water, scrubbed with fiber brushes and appropriate cleaner, allowed to dry and be left broom clean and in condition acceptable to the Owner. Do not power wash sidewalks.

SECTION 02511 - "ASPHALTIC" CONCRETE PAVING

1. SECTION INCLUDES
A. Paving base
B. Base Course and surface course

2. REFERENCE STANDARDS
A. American Association of State Highway Officials (AASHO)
B. American Society for Testing Materials (ASTM)
C. Governing Authority: Applicable publications of governing bodies having jurisdiction over the work

3. SUBMITTALS
A. Submit design mix test reports to Owner per SUBMITTAL requirements..

4. MATERIALS
A. Sub-Base: If required; as shown on the site plan (SP) drawings and specified in other sections of these specifications
B. Base Course (Binder): Unless otherwise shown on the drawings; uniform mix of coarse aggregate and asphalt as determined by "design mix"
C. Surface Course: Unless otherwise shown on the drawings; uniform mix of coarse aggregate and fine aggregate (pea gravel will not be acceptable), mineral filler and asphalt as determined by "design mix",
D. Design Mixes: Contractor employ and pay for the services of an Owner-approved independent testing laboratory to determine design mixes for base and surface courses; including asphalt bitumen content; ASTM D2172, latest edition, entitled, "Quantitative Extraction of Bitumen from Bituminous Paving Mixtures"

5. GRADE CONTROL
A. Establish and maintain lines and grades shown on drawings by means of line and grade stakes.

6. TRANSPORTATION
A. Transport paving mixes from approved mixing plant to site in tight vehicles with metal bottoms previously cleaned of foreign materials. Vehicles shall be suitably insulated to avoid heat losses. Cover each load to prevent cooling and loss of ingredients.

7. PLACING
A. General: Thickness shown on Civil drawings. Unless otherwise shown on the drawings, place asphaltic concrete in two courses; first a coarse graded base course, and second a fine graded surface course. Apply base course to prepared sub-base (when applicable) which has been primed with asphalt MC-1, application temperature 50 to 120 degrees F, at a rate of 0.15 to 0.40 gal/sq yd. Apply surface course to base course to which has been applied a tack coat of asphalt RC-2, application temperature 100 to 175 degrees F, at rate of 0.05 to 0.25 gal/sq yd. Place each course under temperature conditions of 40 to 90 degrees F.
B. Means: Dump and spread mixture on primed base with spreading and finishing machine, so that after compaction, surface will be smooth, of uniform density and meets requirements for typical cross-section shown. Other placing means may be proposed.
C. Time and Temperature: Place and initially roll during daylight hours. Mixture placing temperature; between 225 and 325 degrees F.
D. Protection of Curbs and Gutters: Prevent splattering of adjacent curbs, gutter, concrete paving and structures. Hand spreading may be employed where machine is impractical.
E. Finish Grades: Approximately 6 inches below adjacent concrete sidewalks, and/or curbs, except as specifically shown otherwise on the drawings; true to grades shown and straight within 1/4 inch in 10 feet when checked with a straight edge. No "bird baths" will be allowed.

8. ROLLING
A. General: After rolling with medium weight steel-wheeled roller, roll with pneumatic, three wheel, or tandem rollers longitudinally at sides and proceed toward center of pavement, overlapping on successive trips by at least half width of rear wheels. Alternate trips of roller shall be slightly different in length.
B. Compression and Roller Marks: Roll until no further compression can be obtained and roller marks are eliminated. If required, roll diagonally in each direction with tandem roller with second diagonal rolling crossing line of first rolling.
C. Prevention of Mixture Adhesion to Roller: Keep wheels moistened with water; excessive use of water will not be permitted. Do not permit rollers to stand on pavement which has not been fully compacted and which has not cooled to atmospheric temperature.
D. Displacement: Keep movement of roller slow enough to avoid displacement of mixture. Correct any displacement at once by use of rakes and addition of fresh mixture.
E. Precautions: Prevent dropping of oil, gasoline and grease on pavement.
F. Hand Operations: Thoroughly compact edges of pavement along curbs, headers, aprons, manholes, valve boxes and similar places not accessible to roller with lightly oiled hand-operated vibrating rollers or mechanical tampers.

ARCHITECT:

DAVID SCOTT WINDLE, AIA

6201 CAMPUS CIRCLE DRIVE E.
IRVING, TEXAS 75038
TEL: 972.870.1288
WWW.IDSTUDIO4.COM
E-MAIL scottw@idstudio4.com

CORPORATE:
BRINKER RESTAURANT CORPORATION,
A VIRGINIA CORPORATION
3000 OLYMPUS BLVD.
DALLAS, TEXAS 75019
972.980.9917
www.brinker.com

09/23/2024
ISSUE FOR BID
THESE DOCUMENTS ARE FOR BIDDING PURPOSES ONLY. DO NOT USE FOR CONSTRUCTION.

RESTAURANT #CH1679
PROTOTYPE 18.5FS

CHILI'S TOOELE
951 N MAIN STREET
TOOELE, UT 84074

CLIENT: BRINKER RESTAURANT CORP.
A VIRGINIA CORPORATION

DATE	DESCRIPTION
6/27/2024	ISSUE FOR PERMIT
9/23/2024	ISSUE FOR BID

△	DATE	DESCRIPTION

PROJECT NUMBER:
CHI24007

SHEET TITLE:
SPECIFICATIONS
01780 - 02511

SHEET NUMBER:
SP102

9. SPECIAL TESTING

A. Extraction and Gradation Test: ASTM D2172 for each type.
B. Field-In-Place Density Test: ASTM D1188 for each type.
C. Thickness Test: Determine by test borings. Make one test for each 5,000 sq ft of paving surface. If average thickness is deficient by no more than 1/4 inch, and no individual thickness is deficient by more than 5/8 inch, installation will be held to meet requirements. If average thickness is deficient by more than 1/4 inch, or if any individual thickness determination is deficient by more than 5/8 inch, pavement thickness will be held to not meet requirements. Deficient areas shall be defined, removed and replaced, or adjusted to design thickness by methods acceptable to the Owner.

SECTION 02580 - PAVEMENT MARKING

1. GENERAL

A. Pavement-Marking Paint: Alkyd-resin type; ready mixed; complying with FS TT-P-115, Type I, or ASHTO M 248, Type N.
1. General: Color White
2. Fire Lanes: Color Red

B. Handicapped Access Ways & Parking: Color Blue and shall comply with the latest provisions of the Americans with Disabilities Act and local accessibility standards.

C. Dust, clay, silt, and excess sand shall be removed by sweeping from pavement to be marked prior to application of paint.

SECTION 02830 – ORNAMENTAL FENCES AND GATES

1. MATERIALS

A. Aluminum Extrusions: The structural members of the fence system shall be extruded from 6061-T6 with a minimum ultimate strength of 38,000 PSI and a minimum yield strength of 35,000 PSI.
1. Pickets: Extruded aluminum manufactured from 6063-T5 alloy with a minimum ultimate strength of 36,000 PSI and a minimum yield strength of 32,000 PSI.
2. Extrusions: ASTM B 221, Alloy 6063-T5.
3. Tubing: ASTM B 429, Alloy 6063-T6.
4. Plate and Sheet: ASTM B 209, Alloy 6061-T6.
5. Die and Hand Forgings: ASTM B 247, Alloy 6061-T6.
6. Castings: ASTM B 26/B 26M, Alloy A356.0-T6.

B. Fasteners: All fasteners shall be stainless steel with a zinc dichromate coating for enhanced corrosion resistance. Phillips head screws shall be used to attach the pickets to the rails while self-drilling, self-tapping (Phillips) head screws shall be used to connect the rails to the posts. All screw heads shall be painted to match the finish of the fence.

C. Accessories: All castings used for post caps, rail/base attachments and latches shall be made form either zinc or aluminum. Only stainless steel fasteners may be used with these accessories. All accessories shall be painted to match to match the fence.

2. PRODUCTS

A. Manufacturers: Subject to compliance with requirements, provide products by available manufacturers offering products that may be incorporated into the Work which meet the following minimum requirements.

B. Components:
1. Line Posts: 1-1/2 by 1-1/2 inches with 0.100-inch wall thickness.
2. End and Corner Posts: 2-1/2 by 2-1/2 inches with 0.125-inch wall thickness.
3. Swing Gate Posts: 2-1/2 by 2-1/2 inches with 0.250-inch wall thickness.
5. Post Caps: Aluminum castings that [cover entire top of posts] [project at least 1/4 inch (6 mm) beyond posts] [with round ball finial].
6. Horizontal Rails: Extruded-aluminum channels, 1-1/2 by 1-1/2 inches with 0.100-inch thick sidewalls and 0.070-inch thick top
7. Top Rail: Extruded-aluminum tube, 1-1/2 by 3-1/2 inches with 0.100-inch wall thickness, wirh canted top for water runoff.
8. Pickets: Extruded-aluminum tubes, 1-1/2 inch square, with 0.062-inch wall thickness
9. Picket Spacing: 6-1/2 inches clear.
10. Fasteners: Manufacturer's standard tamperproof, corrosion-resistant, color-coated fasteners matching fence components.

3. FINISH

A. Pretreatment: Before the finish is applied, a five-stage Pretreatment must be applied to assure maximum adhesion and corrosion resistance
B. Powder-Coat Finish: AAMA 2603 except with a minimum dry film thickness of 2 mils. Comply with coating manufacturer's written instructions for cleaning, conversion coating, and applying and baking finish. Color as noted on drawings.

4. CONSTRUCTION

A. Fence: Fencing shall be manufactured according to the manufacturer's standard methods complying with fencing details included in the drawings..

B. Gates: Gates shall be manufactured according to the manufacturer's standard methods. Gates shall be self-closing with bumper plate and no latch. Hinges according to manufacturer's written instructions, level, plumb, and secure for full opening without interference. Attach hardware using tamper-resistant or concealed means. Install ground-set items in concrete for anchorage. Adjust hardware for smooth operation and lubricate where necessary.

C. Strength: Assembled sections must be able to support a minimum load of 1000 pounds at the mid-point of any horizontal rail without permanent deformation.

5. WARRANTY

A. The entire fence system shall have a lifetime warranty against defects in materials and workmanship.

SECTION 02831 - CHAIN LINK FENCES AND GATES

1. SECTION INCLUDES

A. Fence framework, fabric and accessories.

B. Excavation for post bases.

C. Concrete anchorage for post.

D. Gates and related hardware.

2. QUALIFICATIONS OF MANUFACTURER

A. Company specializing in commercial quality chain link fencing with two years experience.

3. ENGINEERING DESIGN

A. Design framework and fittings to fit dimensions and loads indicated by use. Design in accord with values assigned by most restrictive industry guidelines.

4. REFERENCE STANDARDS

A. American National Standards Institute (ANSI)

B. American Society for Testing Materials (ASTM)

C. Federal Specifications (FS)

5. SUBMITTALS

A. Shop Drawings: Submit per SUBMITTALS Section; show plan layout, grid and spacing of components. Include accessories, fittings hardware, anchorages, and schedule of components. Owner's acceptance is required prior to start of fabrication and/or shipment.

6. BASIC MATERIALS

A. Framework: Schedule 40 steel pipe, standard weight, one piece without joints; ASTM A120.
1. Line Posts: 1.9 inch dia., length required.
2. Corner and Terminal Posts: 2.38 inch diameter (min.); size to be determined by use and engineering design.
3. Gate Posts: 3.5 inch dia. (min.)
4. Top, Bottom and Brace Rails: 1.66 inch dia., plain end, sleeve coupled.
5. Gates: 1.66 inch dia. (min.), for fittings and truss rod fabrication; size to be determined by engineering design.

B. Fabric: Three inch 9-gauge diamond mesh steel wire, interwoven, top selvage twisted tight, bottom selvage knuckle end closed. Zinc coated; FS RR-F-191 Type I.

C. Fittings: Steel; sleeves, bands, clips, rail ends, tension bars, fasteners and fittings.

D. Concrete: Portland Cement; 2500 psi at 28 days; 3 inch slump; ASTM C94.

E. Caps: Cast steel or malleable iron; sized to post dimension, set screw retained.

F. Slats: "Solid Slat" by Enviroedge Products Co., Santa Ana, California (800) 549-3343, with Lock-N-Go Fastening System, inserted vertically into each mesh of the chain link fabric. Slats are manufactured utilizing certified recycled polyethylene with fully integral color. Color: Manufacturer's standard as noted on drawings.

7. GATE HARDWARE

A. Hinges shall be of size and material to suit gate size, non-lift-off type, offset to permit 180-degree gate opening. Provide 1-1/2 pair of hinges for each leaf over 6' nominal height.

B. Latch shall be forked type or plunger-bar type to permit operation from either side of gate, with padlock eye as integral part of latch. Provide 3'-0" long chain with end welded to dumpster gate for locking.

C. Wheels, rollers and guides as required for use intended.

8. FINISHES

A. Galvanized; ANSI/ASTM A123; 1.8 oz./sq. ft.

9. INSTALLATION

A. General: Install framework, fabric, accessories and gates in accord with ANSI/ASTM F567 and accepted shop drawings.

B. Framework:
1. Posts: Space line posts at intervals of 10 feet (max.). Set terminal, gate and line posts plumb, in concrete footings with top of footing 6 inches below finish grade. Footing depth below finish grade: ANSI/ASTM F567.
2. Braces and Rails: Provide top rail through line post tops and splice with 7-inch long rail sleeves. Brace each gate and corner post back to adjacent line post with horizontal center brace rail and diagonal truss rods. Install brace rail, one bay from end and gate posts. Install center and bottom brace rail on corner and gate leaves.

C. Fabric: Stretch between terminal posts. Position bottom 2 inches above finished grade. Fasten to top rail, line posts, braces, and bottom tension wire with wire ties 15 inches o.c. max. Attach to end, corner, and gate posts with tension bars and tension bar clips. Install continuous bottom rail between terminal posts.

D. Accessories: Install caps and attach fabric; tension and secure. Install slats in locations as shown in the Construction Documents.

E. Gates: Install in accord with manufacturer's instructions, including: hardware and concrete work required for locking devices for center of double gate openings.

SECTION 02854 - PARKING BUMPERS (WHEEL STOPS)

1. SECTION INCLUDES
A. Parking bumper (wheel stop)

2. WHEEL STOPS
A. Precast, air-entrained concrete; 2500-psi minimum compressive strength; approximately 4-inches high, 10-inches wide, and 72-inches long. Provide chamfered corners and drainage slots on underside and provide holes for dowel-anchoring to substrate.
1. Color: Yellow

3. DOWELS
A. Not less than 2 - 3/4" round X 24" long (minimum), galvanized steel dowels as recommended by wheel stop manufacturer.

4. GENERAL
A. Install wheel stops in locations and in accord with details shown on the drawings.

5. INSTALLATION
A. Countersink steel dowels to a point 1/2" to 3/4" below the top surface of the wheel stop and set in such a manner as to avoid chipping or cracking the concrete during installation, and seal reveal with silicone caulking flush.

6. CLEAN-UP
A. Upon completion of work of this section, remove related debris from premises.

DIVISION 03 – CONCRETE

SECTION 03300 - CAST-IN-PLACE CONCRETE

1. SCOPE

A. The Contractor shall furnish labor, materials and equipment necessary to install all items of cast-in-place concrete, and all necessary items as shown on the drawings, including anchor bolts for columns, items specified herein, and items required for a complete installation.

2. REFERENCES:

A. The ACI "Manual of Concrete Practice" and the CRSI "Manual of Standard Practice" shall apply unless modified herein.

3. SUBMITTALS

A. Concrete Design Mix: Submit separate design mix for each type concrete mix specified on the drawings and / or in the soils report.Include alternate mix designs when characteristics of materials, project conditions, weather, test results, or other circumstances warrant adjustments.
1) Indicate amounts of mix water to be withheld for later addition at Project site.
2) Indicate any proposed admixtures.

B. Steel Reinforcement Shop Drawings: Details of fabrication, bending, and placement, prepared according to ACI 315, "Details and Detailing of Concrete Reinforcement." Include material, grade, bar schedules, stirrup spacing, bent bar diagrams, arrangement, and supports of concrete reinforcement. Include special reinforcement required for openings through concrete structures.

4. MATERIALS

A. Cement: The cement used shall be Portland Cement, conforming to ASTM C 150, Type I. One brand shall be used for the complete project.

B. High early strength concrete may be used at General Contractor's discretion.

C. Aggregates:
1. Coarse aggregate shall conform to ASTM C-33 specifications with maximum size No. 57. The material shall consist of crushed stone, gravel, or other hard, strong, durable, uncoated pieces.
2. Fine aggregate shall conform to ASTM C-33, and may be natural sand or manufactured sand.

D. Admixtures:
1. Air entrainment agents conforming to ASTM C-260 shall be used in concrete exposed to weather, and may be used in all concrete on this project. Air entraining admixtures shall be used to produce 3% to 6% air by volume in the concrete.
2. High-range water reducing admixture (Super Plasticizer) meeting requirements of ASTM C 494 may be used at the discretion of the Contractor.

E. Concrete Sealers:
1. Materials:
a. Base Sealer: Micro Guard Concrete Clear Waterproofing Sealer, # AD702.
b. Surface Sealer: Micro Guard Hard Tile Clear Matte Finish Treatment, #AD708.
c. Admixture: Micro Grip Anti-Skid Floor Media Additive, # AD5-050.

F. Water: Water used for mixing of concrete shall be potable.

G. Reinforcing Bars: All reinforcing bars shall conform to ASTM A615 - Grade 60, deformed. All bars shall be free of loose and/or excessive rust or other materials which will prevent bond.

H. Expansion Joint Material: Expansion joint material shall conform to ASTM D1751.

I. Bar Supports: Bolsters, chairs, spacers, and other devices for spacing, supporting, and fastening reinforcing bars in place. Manufacture bar supports according to CRSI's "Manual of Standard Practice" from steel wire, plastic, or precast concrete or fiber-reinforced concrete of greater compressive strength than concrete, and as follows:
1) For concrete surfaces exposed to view where legs of wire bar support contacting forms, use CRSI Class 1 plastic-protected or CRSI Class 2 stainless-steel bar supports.

J. Mill Tests: Reports may be required on any and all material at the Engineer's discretion and direction. Costs of these reports shall be borne by the Contractor.

K. Waterproof base coat and topcoat: Thoroseal or approved alternate.

L. No fly ash or calcium chloride shall be used on this project.

4. CONCRETE QUALITY

A. Strength: All cast-in-place concrete shall have a maximum weight of 150 pounds per cubic foot and minimum strength at 28 days (ultimate strength of 3000 psi).

B. Proportioning of the Concrete Mixture:
1. The proportion of the aggregate to cement for any concrete shall be such as to produce a mixture which will work readily into the corners and angles of the forms and around reinforcement with the method of placing employed on the work, but without permitting the materials to segregate or excess free water to collect on the surface.
2. The materials used for the concrete shall be measured by weight. Maximum slump shall be 4".

C. Tests:
1. The Contractor shall assist Owner's testing laboratory to receive, mark, cure, and test cylinders in accordance with ASTM C-39. The test report by the laboratory shall identify the location of the concrete sampled, date, slump, air content and other necessary information. The laboratory shall send electronic copies of the reports to the Owner.
2. The Owner shall be responsible and pay for all tests. Equipment needed at the site shall be furnished by the Contractor.
3. Routine tests of concrete shall consist of:
a. Slump test for each load of ready-mixed concrete.
b. Compressive strength test for each day's pour and/or each 50 cubic yards of concrete poured. This test shall conform to ASTM C-31 and consist of 4 cylinders.

5. INSPECTIONS

A. Owner's Approval: The Contractor shall notify the Owner 48 hours prior to schedule placement of concrete. The forms, steel and other conditions must be approved prior to placement of concrete.

6. MIXING AND PLACING CONCRETE

A. All concrete for this project shall be from an approved central mixing plant. Mixing and delivery shall conform to ASTM C-94.

B. Concrete shall be conveyed from the mixer to the place of final deposit by methods which will prevent the separation or loss of materials.

C. Concrete shall be deposited as nearly as practicable in its final position to avoid segregation due to re-handling or flowing. When concreting is once started, it shall be carried on as a continuous operation until the placing of the panel or section is completed.

D. Concrete shall be maintained in a moist condition for seven (7) days after placing by one of the following methods:
a. Wet coverings
b. Spraying
c. Curing compound
1. Curing method shall be compatible with floor coatings or coverings.
2. Ashford formula may be used in lieu of curing compound (Part 3). This material shall be applied according to manufacturer's recommendations.

E. Adequate precautions shall be taken for cold weather or hot weather concreting. (ACI 306 or ACI 305).

7. FORM WORK AND CONSTRUCTION DETAILS

A. Forms
1. Forms shall conform to shapes, lines and dimensions of the members as called for on the plans and shall be sufficiently tight to prevent the leakage of mortar. They shall be properly braced or tied together so as to maintain position and shape.
2. Form material shall be of:
a. Plywood: APA Plyform conforming to PS 174
b. Metal Forms
3. Before placing the concrete and reinforcing steel, the contact surfaces of all forms shall be thoroughly wetted with water or coated with approved form oil. The form oil shall be applied with a brush or spray so as to cover the form evenly without excess drip. Form coating material used to coat formwork to facilitate the removal thereof shall not cause softening or permanent staining of the concrete surface.

B. Removal of Forms: Forms not required for structural support may be removed as soon as concrete has hardened sufficiently to resist damage during removal of forms.

8. FINISHES

A. Steel trowel finish shall be applied to all floor slabs in the building, unless otherwise noted.

B. Light broom finish perpendicular to traffic shall be applied to all exterior walkways. A 3/4" transverse contraction joint shall be formed with a tool designed for that purpose at equal intervals not exceeding the width of the walkway. All edges adjoining the final ground line shall be rounded with a 1/4" edger. Expansion joints shall not exceed 20'.

C. Concrete Sealer:
1. Step One, Concrete Clear Sealer:
a. Concrete to be sealed must have aged a minimum of 28 days prior to sealer installation.
b. Immediately prior to applying concrete sealer, the concrete must be thoroughly cleaned. The surface should be swept then scrubbed using rotary floor machine. The surface must be rinsed after cleaning until the rinse water is completely clean. After drying, it should be inspected closely, and additional or spot cleaning should be performed if necessary.
c. Surfaces must be properly prepared as prescribed in manufacturer's instructions. Surrounding areas and adjacent surfaces must be masked or protected from overspray, spills, tracking, and equipment contact. The work area should be roped off and closed to traffic.
d. Immediately prior to use, the liquid material must be thoroughly power-mixed as described in manufacturer's instructions. Application must be made full strength (un-thinned) at the coverage rate recommended and with equipment recommended by manufacturer's instructions.
e. Base sealer must be applied thinly and uniformly. A wet edge should be maintained and overlap controlled. Material should not be over-applied or allowed to puddle or collect in joint indentations.
f. Base sealer must be allowed to dry completely, normally a minimum of 12 to 48 hours, before it is subjected to temperatures below 42 degrees Fahrenheit or to water from any source.
2. Final Step, Clear Sealer:
a. Immediately prior to use, the liquid material must be thoroughly power-mixed as described in manufacturer's instructions. Application must be made full strength (un-thinned) at the coverage rate recommended and with equipment recommended by manufacturer's instructions.
b. Hard Tile Sealer shall be applied thinly and uniformly utilizing a conventional fine mist sprayer per manufacturers written instructions.
c. While spraying clear sealer, broadcast Anti-Skid Floor Media additive using manufacturer's special application gun, with cover layer of hard tile sealer to coat surface.
d. The final coat may be walked on the next day, but five days should elapse before the surface is subjected to heavy use or rough treatment.

D. Variation in concrete slabs shall not exceed 1/8" in ten feet from true grade.

E. All exposed concrete, except patio, walkways and floor slabs, shall have a rubbed finish, satisfactory to the Owner's Construction Manager. "White Washing" by use of separately mixed grout will not be permitted.

9. REINFORCEMENT

A. Reinforcement shall be accurately placed and securely supported on metal or plastic chairs.

DIVISION 04 – MASONRY

SECTION 04220 - CONCRETE UNIT MASONRY

1. SECTION INCLUDES

A. Concrete unit masonry
B. Horizontal masonry wall reinforcement.
C. Building in bolts, anchors, nailers, angles, inserts, conduits, piping, flashings, etc. furnished and located by other trades.

2. REFERENCE STANDARDS

A. American Society for Testing Materials (ASTM)
B. International Masonry Industry All-Weather Council (IMIAC)

3. MOCK-UP

A. Construct masonry mock-up, 4 feet long by 4 feet wide, which includes masonry anchor accessories, sill flashings, and corner condition.
B. Locate where directed by Owner' Construction Manager.
C. Mock-up may remain as part of the Work.

4. MATERIALS

A. Masonry Units: High pressure steam cured (air dried units will NOT be acceptable), load bearing, hollow units conforming to ASTM C90, Type I, medium weight; load bearing solid units conforming to ASTM C90, Type 1, medium weight. Testing of lightweight aggregates for drying shrinkage shall be as stipulated in ASTM C331. Units shall be of dimensions that will lay up to 8-inch modules. Units shall include special shapes and sizes shown on the drawings and/or required to complete the work.
B. Masonry Unit Sizes: Standard 8 x 8 x 16 inch and 4 x 8 x 16-inch units as shown on the drawings.

5. ACCESSORIES

A. Joint Reinforcement: Hohmann & Bernard, Inc., Fort Worth, Texas, "Lox-All truss mesh", 3/16" side rods and galvanized No. 9 cross rods. Provide special shapes as required for intersections. Widths shall be 2" less than total masonry thickness.
B. Polyethylene tubing: ¼ inch diameter with internal screen for weeps.
C. Miscellaneous: As shown on the drawings or as required to provide masonry installations which are well tied (anchored) to building frame. Consult with Architect prior to bidding if clarification of this requirement is needed.

6. MORTAR

A. Type: ASTM C270 with minimum compressive strength of 1800 p.s.i., Type M or S; color - standard gray to match block. Masonry cement will not be allowed.
B. Materials:
1. Portland Cement: ASTM C150, Type 1, one brand only.
2. Hydrated Lime: ASTM C207, Type S
3. Sand: Well screened, clean, hard, siliceous particles free from loam, alkali, salt, organic matter and other impurities and shall be composed of grains of varying sizes, all of which shall pass an eight mesh screen, and shall be uniformly graded from coarse to fine.
4. Water: City tap water.

7. GROUT (if shown on the drawings)

A. Grout Mix for reinforced masonry: ASTM C476 with minimum compressive strength of 3000 psi at 28 days. Provide coarse aggregate conforming to ASTM C404 (max. size 3/8") for coarse grout mix. Grout shall have slump of 10-1/2 to 11 inches at the time of placement.

8. PRODUCT DELIVERY, STORAGE AND HANDLING

A. Store mortar materials on dunnage in a dry place. Masonry units stores above ground on level platforms. Cover and protect units and accessories as necessary from elements.

9. CONDITIONS

A. Hot-Weather Installation: Masonry erected when the ambient air has a temperature of more than 90 F., in the shade, and has a relative humidity of less than 50 percent shall be protected from direct exposure to wind and sun for 48 hours after installation, and rain for 12 hours after installation. Masonry surfaces shall be kept moist with water gently spraying the surface, covering work with burlap, which is kept wet, or by other approved means. Such protection shall be continued until mortar has set for 3 days or until lowering temperatures or increased humidity in the air make such protection unnecessary.
B. Cold-Weather Installation: No frozen work shall be built upon. Before erecting masonry during temperatures below 40° F., a written statement shall be submitted, and approval received of the methods proposed to heat the masonry materials and protect the masonry from freezing as required below. No masonry shall be laid at temperatures below 35° F. unless authorized in writing. Cold-weather installation shall be in accordance with IMIAC recommended practices and guide specifications for masonry construction.

10. PREPARATION (MORTAR)

A. Mortar materials shall be accurately measured and mixed with as much water as may be necessary to produce the wettest workable consistency possible. Mortar shall be placed in final position within 2-1/2 hours after mixing. Mortar not used or that has started to set within this time interval shall be discarded. Mortar that has stiffened within the above time interval, because of evaporation of moisture from the mortar, shall be re-tempered to restore its workability.

11. SCAFFOLDING

A. Provide scaffolding necessary for masonry work and make same available to other trades required to execute work in conjunction with masonry work.
B. Design and engineering of formwork and scaffolding as well as its construction shall be the responsibility of the Contractor. Adequately shore block beams, and similar members to safely support all loads and lateral pressures liable to come on the construction. Provide clean-out openings at each vertical bar at bottom course or in foundation wall when wall is erected in more than 5-foot lifts.

12. MASONRY CONSTRUCTION

A. General: No unit having film of water or frost on its surfaces shall be laid. Masonry shall be laid plumb, true to line, with level courses accurately spaced. Bond pattern shall be kept plumb throughout. Corners and reveals shall be plumb and true. Vertical joints shall be shoved tight. Each unit shall be adjusted to final position while mortar is still soft and plastic. Any unit that is disturbed after mortar has stiffened shall be removed and re-laid with fresh mortar.
B. Laying Units: Do not wet before laying. Cut units with power masonry saws, either dry or wet cut. Lay units in a ½ running bond so that vertical joints between units will be located over the center of the units in the next course below and in alignment from bottom to top of wall. Units shall be full bedded in mortar under both face shells. Fill all head-joints solidly with mortar for a distance in from the face of the unit or wall not less than the thickness of the longitudinal face shell. No cells shall be left open in the face surfaces.
C. Grouting (if shown on the drawings): Where shown on the drawings, pour interior grout spaces, except those blocked out with wood in order to provide the openings through wall, full of grout. Grout lifts shall not exceed 4'0". Slushing with mortar is not permitted. Grout shall be caused to flow into all voids and surround rebar. Puddle with sticks - not trowel blades. Except at finishing course, stop all grout pours approximately 1" below top of the last course. Where it is necessary, for construction purposes to stop a longitudinal run of masonry, stop by racking back according to bond. Provide a suitable dam to retain grout. After grout has set, remove wood blocking at openings.
D. Cutting and Fitting: Wherever possible, full units of the proper size shall be used in lieu of cut units. Cut edges shall be clean, true, and sharp. Openings shall be carefully cut, formed, or otherwise neatly made by masonry mechanic for recessed items and for electrical, plumbing, or other mechanical installations so that wall plates, cover plates, or escutcheons required by the installation will completely conceal the openings and will have bottoms in alignment with lower edge of masonry joints.
E. Reinforcement:
1. All CMU walls shall be reinforced horizontally with reinforcing spaced 16" o.c. vertically, maximum. Lay reinforcing on wall and cover with mortar, then bed unit as herein specified. At corners, reinforcing is to be provided in every horizontal course, with inside rod cut and bent to form corner. Provide reinforcing one course above and below all openings. Reinforcement placed as to assure a 5/8" mortar cover measured from the outside face of the joint. Side rods shall be lapped at least 6" at splices.
2. Intersecting and butting walls shall be bonded together by metal anchors spaced 2'-0" o.c. vertically. Interlocking of units not permitted.
F. Control Joints: Make adequate provisions throughout the masonry work for expansion and contraction. Install control joint filler as required, extending from top of bearing surface to top of wall, reinforcing shall not run through. Control joints shall be watertight at exterior joints.
G. Embedded Items: Openings around flush-mounted electrical outlet boxes in wet locations shall be pointed flush with mortar including flush joint above the box. Anchors, ties, wall plugs, accessories, flashings, pipe sleeves, and other items required to be built in shall be built in as the masonry work progresses. Anchors, ties and joint reinforcement shall be fully embedded in mortar.
H. Stopping and Resuming Work: Step back ½ masonry unit length in each course; DO NOT TOOTH. Clean exposed surfaces of set masonry and remove loose masonry units and mortar prior to laying fresh masonry.
I. Jointing:
1. Type: Tool slightly concave; mortar thoroughly compacted and pressed against edges of units. Tool when mortar is thumbprint hard. Finish tooled joints to uniformly straight and true lines and surfaces, smooth and free of tool marks.
2. Width: Equal to the difference between the actual and nominal dimensions of the units in either height or length, but in no case shall the average width of any three adjacent joints be less than 1/4 nor more than ½ inch. Vertical joints shall be of the same width except for inconspicuous variations required to maintain bond.

13. POINTING AND CLEANING

A. Completely remove mortar daubs or splashings from masonry surfaces that will be exposed before setting or hardening. All defects in joints of masonry to be exposed shall be raked out as necessary, filled with mortar, and tooled concave. Masonry surfaces shall not be cleaned, other than removing excess surface mortar, until mortar in joints has hardened. Leave masonry surfaces clean, free of mortar daubs and dirt, and with tight mortar joints throughout.

14. PROTECTION OF WORK

A. Protect surfaces of masonry not being worked on at all times. When rain or snow is imminent, cover the tops of exposed masonry with a strong non-staining waterproof membrane well secured in place and in a manner that will prevent moisture from accumulating within the unfinished wall. Make adequate provisions during construction to prevent damage by wind.

SECTION 04451 - SYNTHETIC STONE VENEER

1. REFERENCE STANDARDS

A. American National Standards Institute (ANSI): A118.4HTF, A118.11 and ANSI 118.15HTF Specifications for Polymer-Modified Mortar required for adhering manufactured stone veneer to cement board, concrete or concrete masonry applications.
B. American Society for Testing Materials (ASTM): ASTM C39, C91, C150, C207, C270 and C1780.
C. Brick Institute of America (BIA): "Technical notes on brick construction"

2. INTENT

A. This specification generally outlines requirements for manufactured stone veneer installation. It is not intended to modify, amend, or otherwise change system manufacturer's specifications for uses intended; manufacturer's specifications govern.

B. Adhered exterior manufactured stone veneer (dry-stacked) system:
1. Manufactured stone veneer as referenced herein (also reference "Finish Schedule" as indicated in the drawings for stone veneer type, size, thickness, finish profile and manufacturer);
2. Bonded with a premium polymer-modified, rapid-setting, non-sag, large format stone mortar over;
3. A cementitious backer board (with joint reinforcement of 4" wide polymer-coated (alkali resistant) mesh tape) over wall sheathing (with integral water-resistive barrier and air barrier).
4. A final penetrating sealer shall be applied to Synthetic stone after installation is complete.

3. WARRANTY

A. Manufacture's Special Warranty:
1. Provide manufacturer's written 50-year Limited Warranty for Manufactured Stone Veneer.
B. Installers Warranty:
1. Provide Installer's written warranty for a period of 5-years from the date of substantial completion and acceptance of the project, against all defects in materials and workmanship.

4. MANUFACTURER

A. The drawings were prepared, and portions of this specification written on the basis of using the products of various manufacturers. It is not the intent to limit competitive bidding. Products with equal characteristics by other manufacturers are acceptable under the conditions of these specifications.

5. MANUFACTURED UNITS

A. Synthetic Stone - Manufacturer, patterns, blends, and colors as noted on drawings.
B. Provided manufacturer's standard corner units at all exterior corners.

6. MORTAR / BONDING ADHESIVE

A. Mapei Ultraflex LFT premium, large, and heavy tile mortar bonding adhesive for all synthetic stone veneer installation.

7. CEMENTITIOUS TILE BACKER BOARD

A. USG "Durock" brand Cement Backer Board with Edgeguard; 1/2 -inch thickness.

8. ACCESSORIES

A. Water for Mortar mixing shall be clean and potable.
B. Flashing:
1) Flashing shall be installed at wall penetrations and terminations of the Synthetic Stone veneer. Assure that all flashing and kickouts are corrosion resistant, integrated with the Stone Veneer system and installed in accordance with building code requirements. Refer to Division 07 Flashing, and Weather Barrier Sections for specified flashing materials.
2) For exterior framed walls, base flashing and weep screeds should be installed a minimum of 4 inches above grade or a minimum of 2 inches above paved surfaces. The minimum distance can be reduced to ½ inch for paved walking surfaces supported by the same foundation that supports the wall.
C. Sealer: Mapei UltraCare Penetrating Plus SB sealer to protection veneer against most common stains.

9. DELIVERY AND STORAGE

A. Deliver materials in original unopened packages and store in enclosed shelter providing protection from damage and exposure to the elements. Remove damaged or deteriorated materials from premises.

10. TEMPERATURE CONDITIONS

A. Do not apply mortar when ambient temperature is 50°F or lower, or when drop in temperature below 50°F is anticipated within 48 hours after application.
B. When ambient temperature exceeds 100 deg F or 90 deg F with a wind velocity greater than 8 mph, do not spread mortar beds more than 48 inches ahead of manufactured stone veneer.

11. ACCESSORY APPLICATION

A. Set level and plumb to straight lines, securely locate Cement Backer-Board units in manner common to trade to develop uniform thickness. Space fasteners not over 8 inches OC for single-flanged accessories; staggered on double-flanged accessories; no joints in straight runs.

12. PREPARATION (MORTAR)

A. Accurately measure and mix mortar materials per manufacturer's written installation instructions. Place mortar in final position within 2 hours after mixing; discard mortar not used or that has started to set within this time.

13. INSTALLATION

A. General: Erect manufactured stone in accordance with supplier's written instructions. Do not lay units having water or frost film on surfaces. Arrange pattern to provide variable joint sizes throughout stonework. Set in full mortar setting bed to support stone over entire bearing surface. Adjust each unit to final position while mortar is soft and plastic. Remove any unit disturbed after mortar has stiffened and relay with fresh mortar. .
B. Mortar: Apply mortar with sufficient material and pressure to form full keys on cementitious backer board and then crossrake. Bring finish to true even surface within limits established by trade practice. Cover a maximum of ten square feet at one time.
C. Manufactured Units: Press manufactured stone veneer units firmly into position in soft mortar bed. Apply equal pressure across unit; jiggle each piece slightly to bond firmly causing mortar to extrude slightly around edges of units. Minimum width of corner units is four inches.
D. Cutting and Fitting: Carefully cut, form, or otherwise neatly make openings for recessed items and for electrical, plumbing, or other mechanical installations so that wall plates, cover plates, or escutcheons will completely conceal openings and will have bottoms in alignment with lower edge of stone joints.
E. Embedded Items: Point openings around flush-mounted electrical outlet boxes in wet locations flush with mortar including flush joint above box. Build in anchors, ties, wall plugs, accessories, flashings, pipe sleeves, and other items as the stonework progresses.
F. Grouting the Joints: Grout is not required for a Dry-Stack Installation.
G. Apply penetrating sealer to entire stone surface once mortar is allow to fully cure.

14. CLEANING AND CURING

A. Completely remove mortar daubs or splashings from exposed manufactured stone surfaces before setting. Clean manufactured stone surfaces, other than removing excess surface mortar, only after mortar has hardened. Leave surfaces clean, free of mortar daubs, dirt, stain, and discoloration, including scum from cleaning operations, and with tight joints. Do not use metal tools and metal brushes for cleaning.

15. PROTECTION OF WORK

A. Protect surfaces of manufactured stone not being worked. When rain or snow is imminent, cover tops of exposed walls with strong non-staining waterproof membrane, well secured in place, in a manner to prevent moisture from accumulating within unfinished wall. Make provisions to prevent damage by wind.

ARCHITECT:

DAVID SCOTT WINDLE, AIA

6201 CAMPUS CIRCLE DRIVE E.
IRVING, TEXAS 75038
TEL: 972.870.1288
WWW.IDSTUDIO4.COM
E-MAIL scottw@idstudio4.com

CORPORATE:
BRINKER RESTAURANT CORPORATION,
A VIRGINIA CORPORATION
3000 OLYMPUS BLVD.
DALLAS, TEXAS 75019
972.980.9917
www.brinker.com

09/23/2024
ISSUE FOR BID
THESE DOCUMENTS ARE FOR BIDDING PURPOSES ONLY. DO NOT USE FOR CONSTRUCTION.

RESTAURANT #CH1679
PROTOTYPE 18.5FS

CHILI'S TOOELE
951 N MAIN STREET
TOOELE, UT 84074

CLIENT: BRINKER RESTAURANT CORP.
A VIRGINIA CORPORATION

DATE	DESCRIPTION
6/27/2024	ISSUE FOR PERMIT
9/23/2024	ISSUE FOR BID

△	DATE	DESCRIPTION

PROJECT NUMBER:
CHI24007

SHEET TITLE:
SPECIFICATIONS
02511 - 04451

SHEET NUMBER:
SP103

SECTION 04700 – THIN BRICK VENEER

1. REFERENCE STANDARDS
   A. American National Standards Institute (ANSI): A118.4HTF, A118.11 and ANSI 118.15HTF Specifications for Polymer-Modified Mortar required for adhering manufactured stone veneer to cement board, concrete or concrete masonry applications.
   B. American Society for Testing Materials (ASTM): ASTM C39, C67, C91, C150, C216, C270. C1088 and C1780.
   C. Brick Institute of America (BIA): "Technical notes on brick construction"

2. INTENT
   A. This specification generally outlines requirements for thin brick veneer installation. It is not intended to modify, amend, or otherwise change system manufacturer's specifications for uses intended; manufacturer's specifications govern.
   B. Adhered Exterior Thin Brick veneer system:
      1. Thin Brick veneer as referenced herein (also reference "Finish Schedule" as indicated in the drawings for brick veneer type, size, thickness, finish profile and manufacturer);
      2. Bonded with a premium polymer-modified, rapid-setting, non-sag, large format stone mortar with grouted joints over;
      3. A cementitious backer board (with joint reinforcement of 4" wide polymer-coated (alkali resistant mesh tape) over wall sheathing (with integral water-resistive barrier and air barrier).
      4. Note: A leveling component shall be installed in a location within wall assembly per manufacturer's requirements "only as necessary" for the thin brick veneer to be installed absolutely true and plum in both the vertical and horizontal direction.

3. WARRANTY
   A. Manufacture's Special Warranty:
      1. Provide manufacturer's written 25-year Warranty for the adhered Thin Brick Veneer wall assembly.
   B. Installers Warranty:
      1. Provide Installer's written warranty for a period of 5-years from the date of substantial completion and acceptance of the project, against all defects in materials and workmanship.

4. MANUFACTURER
   A. The drawings were prepared, and portions of this specification written on the basis of using the products of various manufacturers. It is not the intent to limit competitive bidding. Products with equal characteristics by other manufacturers are acceptable under the conditions of these specifications.

5. MANUFACTURED UNITS
   A. Thin Brick Veneer – Manufacturer, patterns, blends, and colors as noted on drawings.
   B. Provided manufacturer's standard corner units at all exterior corners.

6. MORTAR / BONDING ADHESIVE
   A. Mapei Ultraflex LFT premium, large, and heavy tile mortar bonding adhesive for all synthetic stone veneer installation.

7. CEMENTITIOUS TILE BACKER BOARD
   A. USG "Durock" brand Cement Backer Board with Edgeguard; 1/2 -inch thickness.

8. ACCESSORIES
   A. Water for Mortar mixing shall be clean and potable.
   B. Flashing:
      1) Flashing shall be installed at wall penetrations and terminations of the Synthetic Stone veneer. Assure that all flashing and kickouts are corrosion resistant, integrated with the Stone Veneer system and installed in accordance with building code requirements. Refer to Division 07 Flashing, and Weather Barrier Sections for specified flashing materials.
      2) For exterior framed walls, base flashing and weep screeds should be installed a minimum of 4 inches above grade or a minimum of 2 inches above paved surfaces. The minimum distance can be reduced to ½ inch for paved walking surfaces supported by the same foundation that supports the wall.
   C. Leveling Component: Cementitious Mortar
      1) Mapei Planitop Fast 330 is a Rapid-setting, fiber-reinforced cementitious levelling mortar for exterior and interior walls; applied at a thickness from 3 to 30 mm to smooth out irregularities.
   D. Grout: Rapid-Setting, "All-in-One" Grout Replacement for Sanded and Unsanded Grouts.
      1) Mapei Ultracolor Plus FA with DropEffect™ technology is an ultra-premium, fine-aggregate, fast-setting, polymer-modified, color-consistent, non-shrinking, efflorescence-free grout.
      2) Color: Grout color as noted on drawings.

9. DELIVERY AND STORAGE
   A. Deliver materials in original unopened packages and store in enclosed shelter providing protection from damage and exposure to the elements. Remove damaged or deteriorated materials from premises.

10. TEMPERATURE CONDITIONS
   A. Do not apply mortar when ambient temperature is 50°F or lower, or when drop in temperature below 50°F is anticipated within 48 hours after application.
   B. When ambient temperature exceeds 100 deg F or 90 deg F with a wind velocity greater than 8 mph, do not spread mortar beds more than 48 inches ahead of manufactured stone veneer.

11. ACCESSORY APPLICATION
   A. Set level and plumb to straight lines, securely locate Cement Backer-Board units in manner common to trade to develop uniform thickness.
   B. Space fasteners not over 8 inches OC for single-flanged accessories; staggered on double-flanged accessories; no joints in straight runs.

12. PREPARATION (MORTAR)
   A. Accurately measure and mix mortar materials per manufacturer's written installation instructions. Place mortar in final position within 2 hours after mixing; discard mortar not used or that has started to set within this time.

13. INSTALLATION
   A. General: Erect thin brick veneer in accordance with supplier's written instructions. Do not lay units having water or frost film on surfaces. Arrange pattern to provide variable joint sizes throughout stonework. Set in full mortar setting bed to support stone over entire bearing surface. Adjust each unit to final position while mortar is soft and plastic. Remove any unit disturbed after mortar has stiffened and relay with fresh mortar. .
   B. Mortar: Apply mortar with sufficient material and pressure to form full keys on cementitious backer board and then crossrake. Bring finish to true even surface within limits established by trade practice. Cover a maximum of ten square feet at one time.
   C. Thin Brick Units: Press thin brick veneer units firmly into position in soft mortar bed. Apply equal pressure across unit; jiggle each piece slightly to bond firmly causing mortar to extrude slightly around edges of units. Minimum width of corner units is four inches.
   D. Cutting and Fitting: Carefully cut, form, or otherwise neatly make openings for recessed items and for electrical, plumbing, or other mechanical installations so that wall plates, cover plates, or escutcheons will completely conceal openings and will have bottoms in alignment with lower edge of stone joints.
   E. Embedded Items: Point openings around flush-mounted electrical outlet boxes in wet locations flush with mortar including flush joint above box. Build in anchors, ties, wall plugs, accessories, flashings, pipe sleeves, and other items as the stonework progresses.
   F. Grouting the Joints: After the thin brick veneer has been applied to the wall surface, use a grout bag to fill the joints with grout, forcing grout into any voids. Be careful not to smear grout onto the face of the thin brick veneer. Any grout that accidentally gets on the thin brick veneer should be cleaned away per manufacturer's written instructions.
   G. Grouting the Joints: Finish joints within the thin brick veneer as recommended by the thin brick veneer manufacturer's installation instructions with a concave tooled joint as detailed and noted in Drawings.

14. CLEANING AND CURING
   A. Completely remove mortar daubs or splashings from exposed thin brick veneer surfaces before setting. Clean thin brick surfaces, other than removing excess surface mortar, only after mortar has hardened. Leave surfaces clean, free of mortar daubs, dirt, stain, and discoloration, including scum from cleaning operations, and with tight joints. Do not use metal tools and metal brushes for cleaning.

15. PROTECTION OF WORK
   A. Protect surfaces of thin brick veneer not being worked. When rain or snow is imminent, cover tops of exposed walls with strong non-staining waterproof membrane, well secured in place, in a manner to prevent moisture from accumulating within unfinished wall. Make provisions to prevent damage by wind.

DIVISION 05 – METALS

SECTION 05120 - STRUCTURAL STEEL

1. SUBMITTALS
   A. Shop Drawings: Submit to Architect, indicate sizes, spacing, and locations of structural members, openings, connections, cambers, loads, and welded connections.
   B. Provide setting drawings, templates, and directions for installation of anchor bolts and other anchorages to be installed as work of other sections.
   C. Connections: Provide details of connections as detailed on drawings and comply with other information and restrictions indicated.
      1. Engineering Responsibility: Fabricator's responsibilities include using a qualified professional engineer to prepare structural analysis data for structural-steel connections.

2. REFERENCE STANDARDS
   A. American Institute of Steel Construction (AISC) "Code of Standard Practice for Steel Buildings and Bridges."
   B. AISC "Specifications for Structural Steel Buildings, "including "Commentary."
   C. "Specifications for Structural Joints using ASTM A 325 or A 490 Bolts" approved by the Research Council on Structural Connections.
   D. American Welding Society (AWS) D1.1 "Structural Welding Code - Steel."

3. QUALITY ASSURANCE
   A. Perform design under direct supervision of a Professional Structural Engineer licensed in the State of the project.

4. DELIVERY, STORAGE, AND HANDLING
   A. Store materials to permit easy access for inspection and identification. Keep steel members off ground by using pallets, platforms, or other supports. Protect steel members and packages materials from erosion and deterioration. If bolts and nuts become dry or rusty, clean and re-lubricate before use.

5. MATERIALS
   A. Structural Steel Shapes, Plates, and Bars: ASTM A 36.
   B. Structural Steel Tubing: ASTM A500, GRADE B.
   C. Anchor Bolts: ASTM A36, non-headed type unless otherwise indicated.
   D. Quenched and tempered medium-carbon steel bolts, nuts, and washers, complying with ASTM A 325.
   E. Electrodes for Welding: E70XX, Comply with AWS Code.
   F. Structural Steel Primer Paint: Tnemec 10-99 (or equal).
   G. Nonmetallic Shrinkage-Resistant Grout: Premixed, nonmetallic, non-corrosive, non-staining product containing selected silica sands, Portland cement, shrinkage compensating agents, plastics and water-reducing agents, complying with CE-CRD-C621 and ASTM C1107.

6. FABRICATION
   A. Shop Fabrication and Assembly: Fabricate and assemble structural assemblies in shop to greatest extent possible.
   B. Properly mark and match-mark materials for field assembly.
   C. Connections: Weld or bolt shop connections, as indicated. Bolt field connections, except where welded connections or other connections are indicated.
   D. High-Strength Bolted Construction: Install high-strength threaded fasteners in accordance with AISC "Specifications for Structural Joints using ASTM A 325 or A 490 Bolts."
   E. Cut, drill, or punch holes perpendicular to metal surface. Do not flame-cut holes or enlarge holes by burning.
   F. Shop Painting: Shop-paint all structural steel.
   G. Immediately after surface preparation, apply structural steel primer paint in accordance with manufacturer's instructions and at a rate to provide dry film thickness of not less than 1.5 mils. Use painting methods that result in full coverage of joints, corners, edges, and exposed surfaces.

7. ERECTION
   A. Temporary Shoring and Bracing: Provide temporary shoring and bracing members with connections of sufficient strength to bear imposed loads and as required by applicable laws and regulations.
   B. Field Assembly: Set structural steel accurately to lines and elevations indicated. Align and adjust various members forming part of complete frame or structure before permanently fastening. Clean bearing surfaces and other surfaces that will be in permanent contact before assembly. Perform necessary adjustments to compensate for discrepancies in elevations and alignment. Level and plumb individual members of structure within specified AISC tolerances. Splice members only where indicated and accepted on shop drawings.
   C. Base and Bearing Plates: Clean concrete- and masonry-bearing surfaces of bond-reducing materials and roughen surfaces prior to setting base and bearing plates. Clean bottom surface of base and bearing plates.
      1. Set base and bearing plates for structural members on wedges, shims, or setting nuts as required.
      2. Weld plate washers to top of base plate.
      3. Snug-tighten anchor rods after supported members have been positioned and plumbed. Do not remove wedges or shims but, if protruding, cut off flush with edge of base or bearing plate before packing with grout.
      4. Promptly pack grout solidly between bearing surfaces and base or bearing plates so no voids remain. Neatly finish exposed surfaces; protect grout and allow to cure. Comply with manufacturer's written installation instructions for shrinkage-resistant grouts.

8. FIELD QUALITY CONTROL
   A. Testing Agency: Contractor will engage a qualified independent testing and inspecting agency to inspect field welds and high-strength bolted connections at owner's expense (typically the same company that is doing the CMT inspections).
   B. Bolted Connections: Shop-bolted connections will be tested and inspected according to RCSC's "Specification for Structural Joints Using ASTM A 325 or A 490 Bolts."
   C. Welded Connections: Field welds will be visually inspected according to AWS D1.1.
      1. In addition to visual inspection, field welds will be tested according to AWS D1.1 and the following inspection procedures, at testing agency's option:
         a. Liquid Penetrant Inspection: ASTM E 165.
         b. Magnetic Particle Inspection: ASTM E 709; performed on root pass and on finished weld. Cracks or zones of incomplete fusion or penetration will not be accepted.
         c. Ultrasonic Inspection: ASTM E 164.
         d. Radiographic Inspection: ASTM E 94.
      2. Any test report should be submitted within 3 days.
   D. Correct deficiencies in Work that test reports and inspections indicate does not comply with the Contract Documents within 7 days of report

SECTION 05500 METAL FABRICATIONS

1. SUMMARY
   A. Work of this Section consists of installing all materials furnished under this Section, including all equipment, labor, services, and incidental items required to complete Work as shown on Drawings and specified in this Section.
      1. Miscellaneous Framing and Supports for Work in other Sections to include applications where framing and supports are not specified in other Sections.
      2. Steel lintels, clip angles, etc.
      3. Steel Pipe Bollards.
      4. Chain Support.
      5. Gates at Dumpster Area.
      6. Metal Handrails.
      7. Steel Ladders

2. SUBMITTALS
   A. Welder certificates signed by Contractor certifying welders comply with requirements of this Section.
   B. Fabricator shall be responsible for design of connections not specifically shown on the drawings and for member dimensions and fit.

3. QUALITY ASSURANCE
   A. Qualifications:
      1. Welding and Welders:
         a. Qualify welding processes and welding operators in accordance with AWS DI .1, Structural Welding Code - Steel; DI .3, Structural Welding Code Sheet Steel; and DI .2, Structural Welding Code - Aluminum.
         b. Certify each welder has satisfactorily passed AWS qualification tests for welding processes involved and if pertinent, has undergone recertification.

4. MATERIALS
   A. Ferrous Metals:
      1. Metal Surfaces - General: For fabrication of miscellaneous metal work which will be exposed to view, use only materials which are smooth and free of surface blemishes including pitting, seam marks, roller marks, rolled trade names, and roughness.
      2. Steel Plates, Shapes and Bars: ASTM A36.
      3. Steel Tubing: Cold-formed, ASTM A500: Grade A, unless otherwise indicated or required for design loading.
      4. Steel Tubing: Hot-formed, ASTM A501 for exterior installations and where indicated, provide with hot-dip galvanized coating per ASTM A53.
      5. Brackets, Flanges and Anchors: Cast or formed metal of same type material and finish as supported rails, unless otherwise indicated.
      6. Steel Deck Panels at Service Yard Gates: ASTM A446 with G90 galvanized coating, steel ASTM A611, Grade C, Shop Primed.
      7. Concrete Inserts:
         a. Threaded or wedge-type; galvanized ferrous castings, either malleable iron, ASTM A47, or cast steel, ASTM –7.
         b. Provide bolts, washers and shims as required, hot-dip galvanized, ASTM AI 53.
   B. Chain: 3/4 in. proof coil chain.
   C. Grout:
      1. Nonshrink Nonmetallic Grout:
         a. Premixed, factory packaged, non-staining, non-corrosive, non-gaseous grout complying with CE CRD-C621.
         b. Provide grout specifically recommended by manufacturer for interior and exterior applications of type specified in this Section.
   D. Fasteners:
      1. General:
         a. Provide hot-dipped galvanized fasteners for exterior use or where built into exterior walls.
         b. Select fasteners for type, grade, and class required.
      2. Bolts and Nuts: Regular hexagon-head-type, ASTM A307, Grade A.
      3. Lag Bolts: Square-head-type, FS FF-B-561
      4. Machine Screws: Cadmium plated steel, FS FF-S-92.
      5. Wood Screws: Flat head carbon steel, FS FF-S-1 11.
      6. Plain Washers: Round, carbon steel, FS FF-W-92.
      7. Drilled-In Expansion Anchors: Comply with FS FF-S-325, Group III (anchors, expansion, non-drilling), Type I (internally threaded tubular expansion anchor); and machine bolts complying with FS FF-B-575, Grade 5.
      8. Toggle Bolts: Tumble-wing-type, FS FF-B-588, type, class, and style as required.
      9. Lock Washers: Helical-spring-type carbon steel, FS FF-W-84.
5. FABRICATION
   A. General:
      1. Form metal fabrications from materials of size, thickness, and shapes indicated, but not less than that needed to comply with performance requirements indicated.
      2. Work to dimensions indicated or accepted on shop drawings, using proven details of fabrication and support.
      3. Use type of materials indicated or specified for various components of each metal fabrication
      4. Form exposed Work true to line and level with accurate angles and surfaces and straight sharp edges.
      5. Shear and punch metals cleanly and accurately; remove burrs.
      6. Ease exposed edges to radius of approximately 1/32 in.
      7. Form bent-metal corners to smallest radius possible without causing grain separation or otherwise impairing Work.
      8. Remove sharp or rough areas on exposed traffic surfaces.
      9. Welding:
         a. Weld corners and seams continuously, complying with AWS recommendations.
         b. Exposed Connections: Grind exposed welds smooth and flush to match and blend with adjoining surfaces.
      10. Anchorage:
         a. Provide for anchorage of type indicated, coordinated with supporting structure.
         b. Fabricate and space anchoring devices to provide adequate support for intended use.
   B. Miscellaneous Framing and Supports:
      1. Provide miscellaneous steel framing and supports which are not part of structural steel framework, as required to complete Work.
      2. Fabricate miscellaneous units to sizes, shapes, and profiles indicated or, if not indicated, of required dimensions to receive adjacent other Work to be retained by framing.
      3. Except as otherwise indicated, fabricate from structural steel shapes. plates, and steel bars of welded construction using mitered joints for field connection.
      4. Cut, drill and tap units to receive hardware and similar items.
      5. Provide 3 x 3 x 1/4 angle frame for openings through roof larger than 6 inches, unless otherwise shown on the drawings
   C. Pipe Bollards: Fabricate pipe bollards from Schedule 80 steel pipe.
   D. Exterior Steel Plates and Steel Strap Assemblies:
      1. Form with 14-gauge plate steel.
      2. All welds to be ground, filed and sanded smooth; no exposed fillet welds will be accepted. Miter all exposed corners.
      3. Plates and Straps to pre-rusted and sealed.
   E. Ladders:
      1. Fabricate ladders for the locations shown, with dimensions; spacing, details and anchorage as indicated. Comply with the requirements of ANSI A 14.3, except as otherwise indicated.
      2. Unless otherwise shown, provide 3/8-inch x 3-inch continuous structural steel flat bar side rails with eased edges, spaced 24" apart.
      3. Provide 1" diameter solid structural steel bar range, spaced 12" o.c.
         a. Fit rungs in centerline of side rails, plug weld and grind smooth on outer rail faces.
         b. Support each ladder at top and bottom and at intermediate points, spaced not more than 4'-0" o.c. Use welded or bolted steel brackets, designed for adequate support and anchorage, and to hold ladder clear of the wall surface with a minimum of 11" clearance wall to centerline of rungs. Return rails to wall or structure unless other secure handholds are provided.
         c. Provide non-slip surface on top of each rung, either by coating the rung with aluminum oxide granules set in epoxy resin adhesive, or by using a type of manufactured rung which is filled with aluminum oxide grout.
   F. Steel Angles and Channels
      1. Provide unfinished members at interior galvanized at exterior.
      2. Provide hex head bolt fasteners at spacing as shown in the drawings.
      3. Size and shapes as indicated in the drawings.

6. INSTALLATION
   A. General:
      1. Fastening to In-Place Construction:
         a. Provide anchorage devices and fasteners where necessary for securing miscellaneous metal fabrications to in-place construction.
         b. Include threaded fasteners for concrete and masonry inserts, toggle bolts, through bolts, lag bolts, wood screws, and other connectors as required.
      2. Cutting, Fitting, and Placement:
         a. Perform as required for installation of miscellaneous metal fabrications.
         b. Set Work accurately in location, alignment, and elevation, level. true and free of rack. measured from established lines and levels.
         c. Provide temporary bracing or anchors in formwork for items which are to be built into concrete, masonry, or similar construction.
         d. Fit exposed connections accurately together to form tight hairline joints.
         e. Weld connections which are not to be left as exposed joints but cannot be shop welded because of shipping size limitations.
         f. Grind exposed joints smooth and touchup shop paint coat.
         g. Do not weld, cut, or abrade surfaces of exterior units which have been hot-dip galvanized after fabrication and are intended for bolted or screwed field connections.
      3. Corrosion Protection: Coat concealed surfaces of steel that will come into contact with grout, concrete, masonry, wood, or dissimilar metals with heavy coat of bituminous paint or zinc chromate primer.
7. ADJUSTING AND CLEANING
   A. Touch-Up Painting.
      1. Immediately after erection, clean field welds, bolted connections, and abraded areas of shop paint, and paint exposed areas with same material as used for shop painting.

DIVISION 06 – WOOD AND PLASTICS

SECTION 06100 - ROUGH CARPENTRY

1. SECTION INCLUDES
   A. Structural wall, roof framing and roof sheathing.
   B. Preservative and Fire-Retardant treatment of wood.
   C. Miscellaneous framing and concealed wood blocking for support of toilet and bath accessories, wall cabinets, wood trim, and tables.

2. REFERENCES
   A. AWPA C20 - Structural Lumber -- Fire Retardant Treatment by Pressure Processes; American Wood-Preservers' Association; 2002.
   B. AWPA U1 - Use Category System: User Specification for Treated Wood; American Wood-Preservers' Association; 2005.
   C. PS 1 - Construction and Industrial Plywood; National Institute of Standards and Technology (Department of Commerce); 1995.
   D. PS 20 - American Softwood Lumber Standard; National Institute of Standards and Technology (Department of Commerce); 2005.
   E. SPIB (GR) - Grading Rules; Southern Pine Inspection Bureau, Inc.; 2002.
   F. WCLB (GR) - Standard Grading Rules for West Coast Lumber No. 17; West Coast Lumber Inspection Bureau; 2004.
   G. WWPA G-5 - Western Lumber Grading Rules; Western Wood Products Association; 2005.

3. QUALITY ASSURANCE
   A. Lumber: Comply with PS 20 and approved grading rules and inspection agencies.
   B. Exposed-to-View Rough Carpentry: Submit manufacturer's certificate that products meet or exceed specified requirements, in lieu of grade stamping.
   C. Preservative-Treated Wood: Provide lumber and plywood marked or stamped by an ALSC-accredited testing agency, certifying level and type of treatment in accordance with AWPA standards.

4. DIMENSION LUMBER FOR CONCEALED APPLICATIONS
   A. Sizes: Nominal sizes as indicated on drawings, S4S unless rough lumber is specifically indicated otherwise.
   B. Moisture Content: S-dry or MC19.
   C. Stud Framing (2 x 2 through 2 x 6):
      1. Species: Douglas Fir, Southern, Western Cedars, or Sitka Spruce.
      2. Grade: No. 2.
   D. Joist, Rafter, and Small Beam Framing (2 x 6 through 4 x 16):
      1. Species: Douglas Fir, Southern Pine, Spruce-Pine-Fir, Western Cedars, or Western Woods.
      2. Grade: No. 2.
   E. Miscellaneous Blocking, Furring, and Nailers:
      1. Lumber: S4S, No. 2 or Standard Grade.

5. EXPOSED DIMENSION LUMBER
   A. Sizes: Nominal sizes as indicated on drawings, S4S.
   B. Moisture Content: S-dry or MC19.
   C. Post, Ledger, Joist, Rafter, and Small Beam Framing (2 x 6 through 4 x 16),:
      1. Species: Douglas Fir, Southern Pine, Spruce-Pine-Fir.
      2. Grade: No. 1.

6. CONSTRUCTION PANELS
   A. Concealed Performance-Rated Structural Use Panels:
      1. General: where structural use panels are indicated for the following concealed types of applications, provide APA performance-rated panels complying with requirements designated under each application for grade, span rating, exposure-durability classifications, edge detail, where applicable.
      2. Wall Sheathing: Refer to Section 06160 - Sheathing (ZIP System).
      3. Roof Sheathing: APA RATED STRUCTURAL 1 RATED SHEATHING, exterior with span rating to suit rafter spacing.
   B. Other Applications:
      1. Concealed Plywood: PS 1, C-C Plugged, exterior grade.
      2. Exposed Plywood: PS 1, A-D, interior grade.
      3. Electrical Component Mounting: APA rated sheathing; fire retardant treated.

7. ACCESSORIES
   A. Fasteners and Anchors:
      1. Metal and Finish: Hot-dipped galvanized steel per ASTM A 153/A 153M for high humidity and preservative-treated wood locations, unfinished steel elsewhere.
      2. Nails, Wire, Brads, and Staples: FS FF–N-105.
      3. Power Driven Fasteners: National Evaluation Report NER-272
      4. Wood Screws: ANSI B18.6.1.
      5. Lag Bolts: ANSI B18.2.1
      6. Bolts: Steel bolts complying with ASTM A307, Grade A; with ASTM A563 hex nuts and, where indicated, flat washers.
   B. Joist Hangers: Hot dipped galvanized steel, sized to suit framing conditions.

8. FACTORY WOOD TREATMENT
   A. Treated Lumber and Plywood: Comply with requirements of AWPA U1 - Use Category System for wood treatments determined by use categories, expected service conditions, and specific applications.
   B. Fire Retardant Treatment: AWPA Treatment C20, Exterior Type, and AWPA Treatment C27 for plywood; chemical treatment pressure impregnated; capable of providing a maximum flame spread/smoke development rating of 25 / 30-minute duration.
   C. Preservative Pressure Treatment of Lumber Above Grade: AWPA Use Category UC3B, Commodity Specification A (Treatment C2) using waterborne preservative to 0.25 lb/cu ft retention.
      1. Kiln dry lumber after treatment to maximum moisture content of 19 percent.
      2. Treat lumber in contact with roofing, flashing, or waterproofing.
      3. Treat lumber in contact with masonry or concrete.
   D. Pressure Treatment of Lumber in Contact with Soil and Concrete: AWPA Treatment C2 using preservative to 0.4 lb/cu ft retention.
      1. Preservative for Field Application to Cut Surfaces: As recommended by manufacturer of factory treatment chemicals for brush-application in the field.

9. FRAMING INSTALLATION
   A. Set structural members level, plumb, and true to line. Discard pieces with defects that would lower required strength or result in unacceptable appearance of exposed members.
   B. Make provisions for temporary construction loads and provide temporary bracing sufficient to maintain structure in true alignment and safe condition until completion of erection and installation of permanent bracing.
   C. Install structural members full length without splices unless otherwise specifically detailed.
   D. Comply with member sizes, spacing, and configurations indicated, and fastener size and spacing indicated, but not less than required by applicable codes and AFPA Wood Frame Construction Manual.
   E. Construct double joist headers at floor and ceiling openings and under wall stud partitions that are parallel to floor joists; use metal joist hangers unless otherwise detailed.
   F. Frame openings with two or more studs at each jamb; support headers on cripple studs.

10. WOOD STRUCTURAL PANEL INSTALLATION
   A. General: Comply with applicable recommendations contained in APA Form No. E30K, "APA Design/Construction Guide: Residential & Commercial," for types of structural-use panels and applications indicated.
      1. Comply with "Code Plus" provisions in above-referenced guide.
   B. Fastening Methods: Fasten panels as indicated on drawings and as required by building code, space panels 1/8" apart at edges and ends.

11. NAILING SCHEDULE
   A. Where driving of nails causes splitting, holes for nails shall be pre-drilled. The following is the minimum schedule for common wire nails unless noted otherwise on the drawings:
      1. Built-up beams: As noted on the drawings.
      2. Double top and sole plates: Lower member to studs - 2 - 16d; upper member to lower, staggered - 16d at 12"; at intersection - 3 - 16d. Splice top plate members per construction documents.
      3. Blocking between studs: End nail, each end - 2 - 16d.
      4. Blocking between studs: Toe nail, each end - 2 - 8d.
      5. Ribbons to studs: 1" - 2 -8d.
      6. Wood stripping: 1 - 8d each bearing (use concrete nails at concrete)
      7. Multiple studs: For widths over 4", stagger - 16d at 12"
      8. Studs to bearings: Toe nails, each side - 2 - 8d.
      9. Joists at all bearings: Toe nail each side - 2 - 8d.
      10. Rafters and trusses at all bearings: Toe nail each side - 2 - 8d.
      11. Blocking between joists and rafters: Toe nails, each side, each end - 3 - 8d or splice through using 2 - 16d. No staples will be permitted as a substitute for nails.
      12. Plywood decking and sheathing: Refer to structural drawings.

SECTION 06160 - SHEATHING (ZIP System Sheathing)

1. SUMMARY
   A. Section Includes
      1. Wall sheathing with integral water-resistive barrier and air barrier.

2. REFERENCES
   A. ASTM International (ASTM):
      1. ASTM A153/A153M - Standard Specification for Zinc Coating (Hot-Dip) on Iron and Steel Hardware
      2. ASTM E96/E96M - Standard Test Methods for Water Vapor Transmission of Materials
      3. ASTM E119 - Standard Test Methods for Fire Tests of Building Construction and Materials
      4. ASTM E2357 - Standard Test Method for Determining Air Leakage of Air Barrier Assemblies
   B. International Code Council (ICC):
      1. ICC IBC - International Building Code
   C. ICC Evaluation Service, Inc. (ICC-ES):
      1. AC38 – Acceptance Criteria for Weather Resistive Barriers
      2. ICC-ES AC116 - Acceptance Criteria for Nails and Spikes
      3. ICC-ES AC148 - Acceptance Criteria For Flexible Flashing Materials
      4. ICC-ES AC310 - Acceptance Criteria for Water-Resistive Membranes Factory-bonded to Wood-based Structural Sheathing, Used as Water-Resistive Barriers
      5. ICC-ES ESR-1539 - Power Driven Staples and Nails for Use in Engineered and Non-Engineered Connections
      6. ICC-ES NER-272 - Power Driven Staples and Nails for Use in All Types of Building Construction

3. SUBMITTALS
   A. Product Data: For each type of sheathing product specified.
   B. Evaluation Reports: From ICC-ES, for wood sheathing and seam tape.
   C. Product Certifications: From manufacturer, indicating that sheathing products comply with ICC-ES AC310.
   D. Florida Building Code Supplement: Submit documentation indicating that products comply with requirements of Florida Building Code for projects in that state.
   E. Warranty: Executed copy of manufacturer special warranties.

4. QUALITY ASSURANCE
   A. Provide wall sheathing products meeting requirements for water-resistive barrier in accordance with ICC-ES AC310.
   B. Florida Building Code Compliance: Provide sheathing complying with Florida Building Code product and installation requirements for locations in Florida and outside of high velocity wind zone.

5. DELIVERY, STORAGE, AND HANDLING
   A. Comply with manufacturer's written instructions for protection of sheathing products from weather prior to installation.

6. WARRANTY
   A. Special Manufacturer's Warranty: Manufacturer's standard 30 year warranty following date of Substantial Completion.

7. MANUFACTURERS
   A. Basis-of-Design Product: Provide sheathing products manufactured by Huber Engineered Woods LLC, Charlotte NC; Phone: (800) 933-9220; Website: www.zipsystem.com.

8. PERFORMANCE REQUIREMENTS
   A. Fire-Test-Response Characteristics:
      1. Exterior Fire-Test Exposure: ASTM E108, Class A, when covered with approved Class A coverings.
      2. Fire-Resistance Ratings: Where indicated, provide assemblies tested for fire resistance per ASTM E119.
   B. Air-Barrier Assembly Air Leakage: Less than 0.04 cfm/sq. ft. at 1.57 lbf/sq. ft. per ASTM E2375.
   C. Water-Vapor Permeance, Facer: Minimum 12 perms, ASTM E96/E96M.
   D. Weather Exposure: Manufacturer warranty applies for maximum allowable exposure period of 180 days.

9. WOOD PANEL PRODUCTS
   A. Single Source Limitations: Provide wall sheathing by a single manufacturer.
   B. Oriented Strand Board: DOC PS 2, made with binder containing no added urea formaldehyde.

10. WALL SHEATHING WITH INTEGRAL WATER-RESISTIVE BARRIER AND AIR BARRIER
   A. Oriented-Strand-Board Wall Sheathing: Exposure 1 sheathing with factory-laminated water-resistive barrier facer with printed fastener location symbols.
      1. Basis-of-Design Product: Provide Huber Engineered Woods LLC; ZIP System Sheathing.
      2. Span Rating, Panel Grade and Performance Category: Not less than 32/16; Structural 1; 1/2 Performance Category.
      3. Edge Profile: Square edge.
      4. Facer: Medium-density, phenolic-impregnated sheet material qualifying as a Grade D weather-resistive barrier in accordance with ICC AC38.
         a. Provide fastener spacing symbols on facer for 16-inch and 24-inch on center spacing.

11. FASTENERS
   A. Fasteners, General: Size and type complying with manufacturer's written instructions for Project conditions and requirements of authorities having jurisdiction.
      1. Corrosion Resistance: Hot-dip zinc coating, ASTM A153/A153M.
   B. Nails, Brads, and Staples: ICC AC116 and ICC AC201.
   C. Power-Driven Fasteners: ICC-ES-1539 or NER-272.
   D. Wood Screws: ASME B18.6.1.

12. SHEATHING JOINT-AND-PENETRATION TREATMENT MATERIAL
   A. Self-Adhering Seam and Flashing Tape: Pressure-sensitive, self-adhering, cold-applied, seam tape consisting of polyolefin film with acrylic adhesive, meeting ICC-ES AC148, and tested as part of an assembly meeting performance requirements.
      1. Basis-of-Design Product: Provide Huber Engineered Woods; ZIP System Tape.
      2. Thickness: 0.012 inch.
   B. Liquid-Applied Flashing Membrane: Gun-grade, cold-applied, silyl-terminated polyether (STPE) liquid flashing membrane compatible with sheathing/weather barrier and self-adhering seam and flashing tape, and tested as part of an assembly meeting performance requirements. Follow manufacturer's recommendation for integration with ZIP System Tape.
      1. Basis-of-Design Product: Provide Huber Engineered Woods; ZIP System Liquid Flash.
      2. Hardness, Shore A, ASTM C 661: 40 to 45.

13. EXAMINATION
   A. Examine framing spacing and alignment to determine if work is ready to receive sheathing. Proceed with sheathing work once conditions meet requirements.

14. SHEATHING INSTALLATION
   A. Install sheathing panels in accordance with manufacturer's written instructions, requirements of applicable Evaluation Reports, and requirements of authorities having jurisdiction.
   B. Air and Moisture Barrier: Coordinate sheathing installation with flashing and joint sealant sequencing and installation and with adjacent building air and moisture barrier components to provide complete, continuous air- and moisture- barrier.
   C. Do not bridge expansion joints; allow joint spacing equal to spacing of structural supports.
   D. Install panels with laminated facer to exterior. Stagger end joints of adjacent panel runs. Support all panel edges. Space square-edged panels 0.125 inch (3 mm).
   E. Attach sheathing panels securely to substrate with manufacturer-approved fasteners in compliance with the following:
      1. ICC-ES ESR-1539 or ICC-NES NER-272 for power-driven fasteners.
      2. IBC: Table 2304.9.1 Fastening Schedule.
      3. Structural General Notes and Wood Shear Wall Schedule.
   F. Apply ZIP System Tape at all panel seams, penetrations, and facer defects or cracks to form continuous weathertight surface. Apply tape according to manufacturer's written instructions and requirements of ICC-ES applicable to tape application.
   G. Apply liquid-applied flashing membrane at penetrations, gaps, and cracks to form continuous weather tight surface. Apply liquid membrane according to manufacturer's written instructions. Follow manufacturer's recommendation for integration with ZIP System Tape.

ARCHITECT:

DAVID SCOTT WINDLE, AIA

6201 CAMPUS CIRCLE DRIVE E.
IRVING, TEXAS 75038
TEL: 972.870.1288
WWW.IDSTUDIO4.COM
E-MAIL scottw@idstudio4.com

CORPORATE:
BRINKER RESTAURANT CORPORATION,
A VIRGINIA CORPORATION
3000 OLYMPUS BLVD.
DALLAS, TEXAS 75019
972.980.9917
www.brinker.com

09/23/2024
ISSUE FOR BID
THESE DOCUMENTS ARE FOR BIDDING PURPOSES ONLY. DO NOT USE FOR CONSTRUCTION.

RESTAURANT #CH1679
PROTOTYPE 18.5FS

CHILI'S TOOELE
951 N MAIN STREET
TOOELE, UT 84074

CLIENT: BRINKER RESTAURANT CORP.
A VIRGINIA CORPORATION

DATE	DESCRIPTION
6/27/2024	ISSUE FOR PERMIT
9/23/2024	ISSUE FOR BID

△	DATE	DESCRIPTION

PROJECT NUMBER:
CHI24007

SHEET TITLE:
SPECIFICATIONS
04700 - 06160

SHEET NUMBER:
SP104

SECTION 06170 - LAMINATED VENEER STRUCTURAL TIMBER

1. SECTION INCLUDES
   A. Laminated Veneer Lumber (LVL) framing members.
   B. Hardware and connectors
2. QUALITY ASSURANCE
   A. Manufacturer Qualifications: Manufacturer experienced in Laminated Veneer Structural Timber production, and capable of providing field service representation during construction.
3. REFERENCE STANDARDS
   A. ASTM D2559 Standard Specification for Adhesives for Structural Laminated Wood Products for Use Under Exterior (Wet Use) Exposure Conditions.
   B. ASTM D5456 Specification for Evaluation of Structural Composite Lumber Products.
   C. National Design Specification for Wood Construction (NDS).
   D. Materials shall comply with ESR Report #ESR-2993.
4. SUBMITTALS
   A. Submit to Architect per SUBMITTALS Section for acceptance prior to start of fabrication. Show lumber combinations (AITC and AWPA combination symbols for identification), details, methods and sequences of assembly, erection diagrams and instructions for use in field.
   B. Manufacturer's Product and Material Safety Data Sheets, for all specified products.
   C. Shop Drawings: Submit data showing product components, including finish.
5. MATERIALS
   A. Basis for Design: RedBuild RedLam Timber.
   B. Douglas Fir, Larch or Hemlock, touch sanded, E = 2.0E6 psi, Fb = 2900 psi; sizes, shapes and profiles as indicated in Contract Documents.
   C. Grade Stamps: All RedLam LVL materials shall comply with NES Report No. NER-481 or CCMC Report No. 11161-R.
   D. Hardware: Furnish connections for joining members to each other and/or supports.
6. FABRICATION
   A. LVL shall be manufactured in a plant listed in the above referenced reports under the supervision of an approved third-party inspection agency. It shall be manufactured in a continuous process with all grain parallel with the length of the members.
   B. LVL shall be manufactured in a continuous process from wood fiber with all strands oriented to the length of the member and then fed into a press. All members are to be free of finger or scarf joints.
   C. Adhesives shall be of waterproof type conforming to the requirements of ASTM D2559.
   D. Preservative Treatment: Pressure treat members or portions of members in contact with concrete or exterior to conform to AWPA standard C-28; retention 0 .3 lb/cu ft. of wood.
   E Protection: Individually wrap each member
7. STORAGE AND PROTECTION OF MATERIALS
   A. Contractor receive, unload and store materials. Store materials protected from exposure to harmful weather conditions and at temperature and humidity conditions recommended by manufacturer.
8. ERECTION
   A. Compliance: Comply with manufacturer's product data, including product technical bulletins, product catalog installation instructions and product carton instructions for installation.
   B. General: Handle with non-marking slings. Erect in accord with accepted shop drawings.
      1. Minor Misfits: Correction of minor misfits by moderate use of drift pins, and moderate amount of reaming, chipping or cutting is considered part of erection. Immediately report errors which prevent proper assembly of parts by these measures to Architect for authorization of corrective measures prior to assembly.
   C. Install per the Contract Documents and manufacturer's recommendations. Holes, cuts or notches not shown on the contract documents shall not be permitted.
9. PROTECTION OF COMPLETED WORK
   A. Keep protective wrappings in place until members are enclosed within building. Gradually bring initial building heat or cooling to desired level. To minimize checking, do not reduce relative humidity of building rapidly.

SECTION 06172 - GLUED-LAMINATED STRUCTURAL UNITS

1. SECTION INCLUDES
   A. Glued-laminated wood structural units
   B. Hardware and connectors
2. RELATED SECTIONS
   A. Other framing and structural units
   B. Decking
3. QUALITY ASSURANCE
   A. Manufacturer: Materials, manufacture, and quality control; conform with PS 56-73, "Structural Glued Laminated Timber" (ANSI A190.1); mark with quality mark indicating conformance.
   B. Workmen: Use skilled and experienced personnel. Damaged units with evident field repair are unacceptable. Acceptability of repairs rests with the Architect.
4. REFERENCE STANDARDS
   A. American Institute of Timber Construction (AITC)
   B. American National Standards Institute (ANSI)
   C. American Wood Preservers Association (AWPA)
5. SUBMITTALS
   A. Submit per SUBMITTALS Section for acceptance prior to start of fabrication. Show lumber combinations (AITC and AWPA combination symbols for identification), details, methods and sequences of assembly, erection diagrams and instructions for use in field.
   B. Product data including specifications and installation instructions covering lumber, adhesives, fabrication process, accessories, and protection.
      1. Submit certification indicating glued laminated timbers comply with requirements of ANSI/AITC A190.1.
   C. Shop drawings showing full dimensions of each member and layout of entire structural system. Show large-scale details of connections, connectors, and other accessories. indicate species and laminating combination, adhesive type, and other variables in required work. Shop drawings shall be prepared under the supervision of a professional engineer licensed in the state where the material is manufactured.
   D. Where indicated on the drawings, final design of the glued laminated structural units shall be provided by the manufacturer. Provide complete design calculations prepared by a professional engineer, experienced in the design of the type of glued laminated timber used in this project, licensed in the state where the material is manufactured.
6. MATERIALS
   A. Glued-Laminated Members:
      1. Lumber: Kiln-dried and stress graded Southern Pine, Douglas fir, or larch, select structural per requirements for Structural Glued Laminated Timber; AITC 117.
      2. Grade: "Appearance" or better
   B. Hardware: Furnish connections for joining members to each other and/or supports.
   C. Adhesives: Per requirements for dry condition of service.
   D. End Sealer: Manufacturers standard, transparent, colorless wood sealer, effective in retarding transmission of moisture at cross-grain cuts.
   E. Penetrating Sealer: Manufacturers standard, translucent, penetrating wood sealer, that will not interfere with application of wood stain and transparent finish, or paint finish.
   F. Connectors, Anchors, and Accessories: Provide fabricated steel [ASTM A 36 (ASTM A 36M)] shapes, plates, and bars, welded into assemblies of types and sizes indicated. Provide steel bolts (ASTM A 307), lag bolts, nails, and other standard fasteners as required for installation.
      1. Finish: Finish fabricated assemblies with rust-inhibitive primer
7. FABRICATION
   A. Laminating Combinations: Per requirements of PS 56-73. Provide design values shown on the drawings.
   B. Minimum Design Requirements: Laminating combinations shall meet the requirements of ANSI/AITC A190.1, "Structural Glued Laminated Timber". Douglas Fir (Coastal Region). Members shall provide allowable design values as follows:
      Fb = 2400 psi
      Fv = 165 psi
      Fc = 650 psi
      E = 1800 psi
      Members designed for dry condition of Service (moisture content at or below 16%).
   C. Preservative Treatment: Pressure treat members or portions of members in contact with concrete or exterior to conform to AWPA standard C-28; retention 0 .3 lb/cu ft. of wood.
   D. Camber: The required camber for fabricating each member as determined by the manufacturer, and may be either circular or parabolic, at manufacturers option.
   E. End-Cut Sealing: Immediately after end-cutting each member to final length, and after wood treatment (if any), apply a saturation coat of end sealer to ends and other cross-cut surfaces.
   F. Seal Coat: After fabricating and end-coat sealing, apply a saturation coat of penetrating sealer on surfaces of each unit, except for treated wood where treatment has included a water repellent.
   G. Factory Applied Protection: Individually wrap glued laminated timbers with manufacturer's standard water-resistant, plastic coated paper.
8. STORAGE AND PROTECTION OF MATERIALS
   A. Contractor to receive, unload and store materials. Place members on blocks, off ground, and separate with wood strips to allow air circulation around each member. Cover top and bottom with moisture resistant paper.
9. ERECTION
   A. General: Handle with non-marking slings. Erect in accord with accepted shop drawings.
      1. Minor Misfits: Correction of minor misfits by moderate use of drift pins, and moderate amount of reaming, chipping, or cutting is considered part of erection. Immediately report errors which prevent proper assembly of parts by these measures to Owner for authorization of corrective measures prior to assembly.
      2. Shortages: Report shortages to Owner within 10 days of delivery.
10. PROTECTION OF COMPLETED WORK
   A. Keep protective wrappings in place until members are enclosed within building. Gradually bring initial building heat or cooling to desired level. To minimize checking, do not reduce relative humidity of building rapidly.

SECTION 06192 – WOOD CHORD METAL TRUSSES

1. SECTION INCLUDES
   A. Wood chord Metal Trusses
   B. Bridging, bracing and anchorage
   C. Framing for openings
2. QUALITY ASSURANCE
   A. Manufacturer: Company specializing in manufacture of plywood web joists with 3 years minimum experience.
   B. Design: Under direct supervision of Professional Engineer experienced in structural framing design. Verification of design of joists by complete calculations to be submitted as required herein.
   C. These products shall be designed and manufactured to the standards set forth in the ICC ES Report No. ESR-1774.
3. SUBMITTALS:
   A. Product Data: Submit fabricator's specifications and installation instructions for required work, covering lumber, metal plates, hardware, fabrication process, treatment (if any), handling and erection.
      i. Submit certification, signed by an officer of fabricating firm, indicating that trusses to be supplied for project comply with indicated requirements.
   B. Shop Drawings: Submit shop drawings showing: species, sizes and stress grades of lumber to be used; span, camber configuration and spacing for each type of truss required; type, size, material, finish, design value and location of metal connector plates; and bearing and anchorage details.
      i. Fabricator shall submit design analysis indicating loading, section modulus, assumed allowable stress calculations, and similar information needed for analysis and to ensure that trusses comply with design requirements.
      ii. Shop drawings shall be signed and stamped by a structural engineer licensed to practice in the state where trusses are to be erected.
   C. The standards of the manufacturer for quality, engineering and fabrication shall govern the work of this section.
4. MANUFACTURER
   A. The drawings were prepared and this specification written on the basis of using the products of the RedBuilt LLC, Boise, Idaho.
5. TRUSSES
   A. Trusses shall be factory manufactured with steel webs, true pin connections and structural wood chords.
   B. Top and Bottom Chords: Structural wood chord members shall be of machine stress rated lumber of approved grade and kiln dried to a maximum moisture content of 19%.
   C. Web Members: Accurately die stamped from electrically welded, cold rolled steel tubing having a minimum yield strength of 45,000 psi.
   D. Connecting Pins and Bearing Members: Material and size as required by design.
   E. Refer to structural drawings for additional design requirements governing open web wood trusses.
6. HANDLING AND STORAGE
   A. Protect trusses and accessories from damage when stored at the job site. Finished members shall be free of bends, twists or open joints. Replace warped, bowed or damaged trusses at no additional cost to the Owner.
   B. Handle and Install in a manner to prevent bending, warping, twisting or other damage.
   C. Store trusses in a vertical position and protect from weather.
7. INSTALLATION
   A. Install joists in accord with manufacturer's instructions; true to line and level. Provide temporary bracing to position joists in place until permanently secured. Place permanent bridging, bracing and anchors to maintain joists straight and in correct position before installation of decking.
   B. Any product specified elsewhere in these Specifications designed to be suspended by any means from plywood web joist shall be suspended from top flange of joist only, except those specifically designated and detailed in Structural drawings to be applied to bottom flange of joist.
8. PROTECTION OF WORK IN PROGRESS
   A. Temporary construction loads which cause member stresses beyond design limits are not permitted.

SECTION 06200 - FINISH CARPENTRY

1. SECTION INCLUDES
   A. Finish carpentry items.
2. REFERENCES
   A. AWI/AWMAC (QSI) - Architectural Woodwork Quality Standards Illustrated; Architectural Woodwork Institute and Architectural Woodwork Manufacturers Association of Canada; 2006, 8th Ed., Version 2.0.
   B. AWPA C2 - Lumber, Timber, Bridge Ties and Mine Ties -- Preservative Treatment by Pressure Processes; American Wood-Preservers' Association; 2002.
3. QUALITY ASSURANCE
   A. Perform work in accordance with AWI Architectural Woodwork Quality Standards Illustrated, Custom grade.
4. DELIVERY, STORAGE, AND HANDLING
   A. Protect work from moisture damage.
5. LUMBER MATERIALS
   A. Softwood Lumber:
      1. Southern Yellow Pine #2, C&BTR
      2. Texture: Surfaced smooth, both sides.
   B. Hardwood Lumber:
      1. Poplar or Red Oak as indicated on the drawings
      2. Texture: Surfaced smooth, both sides.
   C. Moisture Content: Trim Lumber: 6-12% and conforming to AWI Section 100-S-11 at time of delivery.
6. ADHESIVE
   A. Adhesive: Type recommended by laminate manufacturer to suit application.
7. FASTENERS
   A. Hot dipped galvanized for exterior and high humidity locations, untreated steel elsewhere.
   B. Concealed Joint Fasteners: Threaded steel.
8. WOOD TREATMENT
   A. Wood Preservative by Pressure Treatment (PT Type): AWPA Treatment C2 using water borne preservative with 0.25 percent retainage.
9. FABRICATION
   A. Shop assemble work for delivery to site, permitting passage through building openings.
   B. When necessary to cut and fit on site, provide materials with ample allowance for cutting. Provide trim for scribing and site cutting.
10. INSTALLATION
   A. Set and secure materials and components in place, plumb and level.
   B. Carefully scribe work abutting other components, with maximum gaps of 1/32 inch. Do not use additional overlay trim to conceal larger gaps.
11. ERECTION TOLERANCES
   A. Maximum Variation from True Position: 1/16 inch.
   B. Maximum Offset from True Alignment with Abutting Materials: 1/32 inch.
12. SCHEDULE
   A. Exterior:
      1. Standing and Running Trim:
         a. Species and Grade: Western Red Cedar, WWPA or WCLIB, B & Better - 1 & 2 Clear Vertical Grain
         b. Texture: Surfaced
         c. Furnish surfaced lumber for trim indicated to receive painted or stained finish.
   B. Interior:
      1. Standing and Running Trim and Rails - Transparent Finish:
         a. Quality Standard: Comply with AWI 300 Premium Grade
         b. Backs: Back out or groove backs of flat trim members, kerf backs of other wide flat members except for members with ends exposed in finished work.
         c. Casings: Assemble in plant except where limitation of access to place of installation requires field assembly.
         d. Moldings:
            1) Assemble in plant to maximum extent possible
            2) Miter corners in plant and prepare for field assembly with bolted fittings designed to pull connections together.
         e. Wood Species: Red Oak
      2. Interior Standing and Running Trim and Rails - Opaque Finish:
         a. Quality Standard: Comply with AWI 300 Custom Grade
         b. Backs: Back out or groove backs of flat trim members, kerf backs of other wide, flat members except for members with ends exposed in finished work.
         c. Casings: Assemble in plant except where limitation of access to place of installation requires field assembly.
         d. Moldings:
            1) Assemble in plant to maximum extent possible.
            2) Miter corners in plant and prepare for field assembly with bolted fittings designed to pull connections together.
         e. Wood Species: Poplar
      3. Wood Shelves:
         a. Solid wood for opaque finish (lumber boards, edge-glued where required to produce widths indicated):
            1) Grade: Custom
            2) Lumber Species: Poplar
         b. Panel product for transparent finish (wood veneer laminated over various cores):
            1) Grade: Premium
            2) Lumber Species: Red Oak
            3) Matching of adjacent veneer leaves: Book Match
            4) Veneer matching within panel face: Running Match
            5) Edge Treatment: Lumber matching wood veneer face for species and cut.
            6) Edge Treatment: Wood veneer matching veneer face for species and cut.
         c. High Pressure Decorative Laminate:
            1) Grade: Premium
            2) Laminate Cladding - Horizontal Surfaces: High pressure decorative laminate, provide materials and products resulting in colors and textures of exposed laminate surfaces matching Architect's samples.
            3) Grade: GP-50
            4) Grain Direction: Parallel to longest dimension
            5) Edge Treatment: Same as laminate cladding on horizontal surfaces.
            6) Edge Treatment: Lumber edge for transparent finish matching wood species and cut on cabinet surfaces.
13. ENVIRONMENTAL CONDITIONS
   A. Maintain relative humidity between 25% and 75% during and after installation of finish carpentry

SECTION 06410 - CUSTOM CABINETS

1. SECTION INCLUDES
   A. Specially fabricated cabinet units and hardware.
   B. Countertops.
2. REFERENCES
   A. ANSI A135.4 - American National Standard for Basic Hardboard; 2004.
   B. AWI/AWMAC (QSI) - Architectural Woodwork Quality Standards Illustrated; Architectural Woodwork Institute and Architectural Woodwork Manufacturers Association of Canada; 2006, 8th Ed., Version 2.0.
   C. NEMA LD 3 - High-Pressure Decorative Laminates; National Electrical Manufacturers Association; 2005.
3. SUBMITTALS
   A. Product Data: For each type of product indicated, including cabinet hardware and accessories, and finishing materials and processes.
      1. Include data for fire-retardant treatment from chemical treatment manufacturer and certification by treating plant that treated materials comply with requirements.
   B. Shop Drawings: Show location of each item, dimensioned plans and elevations, large-scale details, attachment devices, and other components.
      1. Show locations and sizes of furring, blocking, and hanging strips, including concealed blocking and reinforcement specified in other Sections.
      2. Show locations and sizes of cutouts and holes for plumbing fixtures, faucets, soap dispensers, and other items installed in architectural woodwork.
   C. Samples for Verification: For the following:
      1. Any products submitted as a substitution for products scheduled on drawings.
   D. Product Certificates: Signed by manufacturers of woodwork certifying that products furnished comply with requirements.
   E. Qualification Data: For firms and persons specified in "Quality Assurance" Article to demonstrate their capabilities and experience.Include lists of completed projects with project names and addresses, names and addresses of architects and owners, and other information specified.
4. QUALITY ASSURANCE
   A. Perform work in accordance with AWI/AWMAC Architectural Woodwork Quality Standards Illustrated, Custom quality, unless other quality is indicated for specific items.
5. DELIVERY, STORAGE, AND HANDLING
   A. Do not deliver woodwork until painting and similar operations that could damage woodwork have been completed in installation areas. If woodwork must be stored in other than installation areas, store only in areas where environmental conditions comply with requirements specified in "Project Requirements".
6. PROJECT CONDITIONS
   A. Environmental Limitations: Do not deliver or install woodwork until building is enclosed, wet work is complete, and HVAC system is operating and maintaining temperature and relative humidity at occupancy levels during the remainder of the construction period. Maintain relative humidity between 25% and 75%.
   B. Field Measurements: Where woodwork is indicated to fit to other construction, verify dimensions of other construction by field measurements before fabrication and indicate measurements on Shop Drawings. Coordinate fabrication schedule with construction progress to avoid delaying the Work.
      1. Locate concealed framing, blocking, and reinforcements that support woodwork by field measurements before being enclosed and indicate measurements on Shop Drawings.
      2. Established Dimensions: Where field measurements cannot be made without delaying the Work, establish dimensions and proceed with fabricating woodwork without field measurements. Provide allowance for trimming at site, and coordinate construction to ensure that actual dimensions correspond to established dimensions.
7. LUMBER MATERIALS
   A. Hardwood Lumber: NHLA; Graded in accordance with AWI/AWMAC Architectural Woodwork Quality Standards Illustrated, Grade I/Premium; average moisture content of 5-10 percent; species as follows:
      1. Exposed Surfaces: Species - Red Oak.
      2. Semi-Exposed Surfaces: Species - Red Oak.
      3. Concealed Surfaces: Species Poplar.
8. PANEL MATERIALS
   A. Exposed Veneer Surfaces: NIST PS 1; APA A-A Grade, plain-sliced Red Oak face veneer; Interior rated adhesives, core of particleboard, medium density fiberboard, or engineered combination, thickness as indicated.
   B. Laminate sub-base: HPVA HP-1, 7-ply A-D grade exterior hardwood plywood with no more than one veneer joint on the face, thickness as indicated. Edge band all exposed edges prior to laminate installation.
   C. Hardboard: AHA A135.4; Pressed wood fiber with resin binder, Class 1 - Tempered, 1/4 inch thick, smooth two sides (S2S); use for drawer bottoms, dust panels, and other components indicated on drawings.
9. LAMINATE MATERIALS
   A. High Pressure Decorative Laminate (HPDL): NEMA LD 3, types as recommended for specific applications and as indicated.
10. ACCESSORIES
   A. Adhesive: Type recommended by fabricator to suit application.
   B. Fasteners: Size and type to suit application.
   C. Bolts, Nuts, Washers, Lags, Pins, and Screws: Of size and type to suit application; galvanized or chrome-plated finish in concealed locations and stainless steel, or chrome-plated finish in exposed locations.
   D. Concealed Joint Fasteners: Threaded steel.
   E. Grommets: Standard plastic, painted metal, or rubber grommets for cut-outs, in color to match adjacent surface.
11. HARDWARE
   A. General: Provide cabinet hardware and accessory materials associated with architectural cabinets, except for items specified in Section 087000 "Finish Hardware".
   B. Hardware Standard: Comply with BHMA A156.9 for items indicated by referencing BHMA numbers or items referenced to this standard.
   C. Butt Hinges: 2-3/4-inch, 5-knuckle steel hinges made from 0.095-inch- thick metal, and as follows:
      1. Semiconcealed Hinges for Flush Doors: BHMA A156.9, B01361.
      2. Semiconcealed Hinges for Overlay Doors: BHMA A156.9, B01521.
   D. Frameless Concealed Hinges (European Type): BHMA A156.9, B01602, 170 degrees of opening.
   E. Back-Mounted Pulls: BHMA A156.9, B02011.
   F. Wire Pulls: Back mounted, size as indicated on the drawings.
   G. Catches: Magnetic catches, BHMA A156.9, B03141 Push-in magnetic catches; BHMA A156.9, B03131 Roller catches; BHMA A156.9, B03071; Ball friction catches; BHMA A156.9, B03013. Provide type as indicated on the drawings.
   H. Adjustable Shelf Standards and Supports: BHMA A156.9, B04071; with shelf rests, B04081; BHMA A156.9, B04102; with shelf brackets, B04112. Type as indicated on the drawings.
   I. Shelf Rests: BHMA A156.9, B04013.
   J. Drawer Slides: Side-mounted, full-extension, zinc-plated steel drawer slides with steel ball bearings, BHMA A156.9, B05091, and rated for the following loads:
      1. Box Drawer Slides: 100 lbf.
      2. File Drawer Slides: 200 lbf.
      3. Pencil Drawer Slides: 45 lbf.
      4. Keyboard Slide: 75 lbf.
   K. Door Locks: BHMA A156.11, E07121.
   L. Drawer Locks: BHMA A156.11, E07041.
   M. Grommets for Cable Passage through Countertops: molded-plastic grommets and matching plastic caps with slot for wire passage where indicated on the drawings.
   N. Exposed Hardware Finishes: For exposed hardware, provide finish that complies with BHMA A156.18 for BHMA finish number indicated on drawings.
   O. For concealed hardware, provide manufacturer's standard finish that complies with product class requirements in BHMA A156.9.
12. FABRICATION
   A. Cabinet Style: Flush overlay.
   B. Drawer Construction Technique: Dovetail joints.
   C. Assembly: Shop assemble cabinets for delivery to site in units easily handled and to permit passage through building openings.
   D. Edging: Fit shelves, doors, and exposed edges with specified edging. Do not use more than one piece for any single length.
   E. Fitting: When necessary to cut and fit on site, provide materials with ample allowance for cutting. Provide matching trim for scribing and site cutting.
   F. Plastic Laminate: Apply plastic laminate finish in full uninterrupted sheets consistent with manufactured sizes. Fit corners and joints hairline; secure with concealed fasteners. Slightly bevel arises. Locate counter butt joints minimum 2 feet from sink cut-outs.
      1. Apply laminate backing sheet to reverse side of plastic laminate finished surfaces.
      2. Cap exposed plastic laminate finish edges with material of same finish and pattern.
   G. Matching Wood Grain: Comply with requirements of quality standard for specified Grade and as follows:
      1. Provide center matched panels at each elevation.
      2. Provide sequence matching across each elevation.
      3. Carry figure of cabinet fronts to toe kicks.
   H. Mechanically fasten back splash to countertops with steel brackets at 16 inches on center.
13. INSTALLATION
   A. Set and secure custom cabinets in place, assuring that they are rigid, plumb, and level.
   B. Use fixture attachments in concealed locations for wall mounted components.
   C. Use concealed joint fasteners to align and secure adjoining cabinet units and countertops.
   D. Carefully scribe casework abutting other components, with maximum gaps of 1/32 inch. Do not use additional overlay trim for this purpose.
   E. Secure cabinets to floor using appropriate angles and anchorages.
   F. Countersink anchorage devices at exposed locations. Conceal with solid wood plugs of species to match surrounding wood; finish flush with surrounding surfaces.
14. ADJUSTING
   A. Adjust installed work.
   B. Adjust moving or operating parts to function smoothly and correctly.

SECTION 06610 - QUARTZ SURFACING

1. SECTION INCLUDES
   A. Countertops
   B. Windowsills
   C. Vanity tops
   D. Bar tops
2. REFERENCE STANDARDS
   A. ASTM International:
      1. C97 Absorption and Bulk Specific Gravity of Dimension Stone
      2. C99 Modulus of Rupture of Dimension Stone
      3. C170 Compressive Strength of Dimension Stone
      4. C501 Relative Resistance to Wear of Unglazed Tile to Taber Abraser
      5. C484 Thermal Shock Resistance of Grazed Ceramic Tile
      6. C531 Linear Shrinkage and Coefficient of Thermal Expansion of Chemical Resistant Mortars, Grouts, Monolithic Surfacings and Polymer Concrete.
      7. C648 Breaking Strength of Ceramic Tile
      8. C1026 Resistance of Ceramic Tile to Freeze Thaw Cycling.
      9. E84 Surface Burning Characteristics of Building Materials.
   B. American National Standards Institute (ANSI)
      1. A108.5 Installation of Ceramic Tile with a Dry Set Portland Cement Mortar Latex Portland Cement Mortar.
      2. A118.4 – Latex-Portland Cement Mortar.
3. SUBMITTALS
   A. Product Data:
      1. Quartz Surfacing; Submit manufacturer's product data.
      2. Quartz Surfacing; Submit manufacturer's care and maintenance data.
   B. Samples:
      1. Submit two 3" x 3" quartz samples showing specified color.
   C. Shop Drawings:
      1. Drawings to include countertop layout, dimensions, required locations of support and blocking members, edge profiles, cutouts and attachments.
4. QUALITY ASSURANCE
   A. Delivery Storage and Handling:
      1. Packaging, Shipping, Handling and Unloading; Observe manufacturer's recommendations and handle in a manner to prevent breakage. Brace parts if necessary. Transport in the near vertical position with finished face toward finished face. Do not allow finished surfaces to rub during shipping and handling.
5. MANUFACTURERS
   A. Acceptable manufacturer:
      1. Cambria (No substitutions)
6. MATERIALS
   A. Material:
      1. Homogeneous mixture containing 93% pure quartz with additions of high performance polyester resin, pigments and special effects. Cambria is licensed to utilize Bretonstone ™ technology and equipment used to compact and polish mixture, and is the only producer of quartz surfaces in the United States.
   B. Thickness: 2cm
   C. Identification: Material shall be labeled with manufacturer's identifying mark.
   D. Color: See Finish Schedule on Drawings.
   E. Exposed Edges and Corners:
      1. Countertops/ Bar tops profile – Mitered
      2. Window sills profile – Mitered
7. ACCESSORIES
   A. Mounting Adhesive:
      1. Provide structural grade "50 year" silicone or epoxy adhesive.
      2. Acceptable epoxy manufacturers
         a. Cambria Two Part Acrylic Adhesive
         b. Akemi North America
         c. Bonstone Material Corporation
         d. Tenax USA
   B. Quartz Surface Adhesive:
      1. Provide epoxy or polyester adhesive of a type recommended by manufacturer for application and conditions of use.
      2. Acceptable manufacturers:
         a. Cambria Two Part Acrylic Adhesive
         b. Akemi North America
         c. Bonstone Material Corporation
         d. Tenax USA
   C. Joint Sealant:
      1. Clear sealant of type recommended by manufacturer for application and use.
      2. Provide anti-bacterial type in toilet, food preparation.
      3. Acceptable manufacturers:
         a. Dow Corning
         b. GE Sealants
   D. Solvent: Denatured alcohol for cleaning quartz surfacing to assure adhesion of adhesives and sealants.
   E. Cleaning Agents: Mild soap and water.
8. FABRICATION
   A. Fabricator:
      1. Fabricator shall be by a certified Fabricator, certified in writing by Manufacturer.
   B. Layout:
      1. Layout surface to minimize joints and avoid L-shaped pieces of quartz surfacing. Layout and fabricate with "hairline" joints.
   C. Cutouts:
      1. Cutouts shall have a minimum 3/8 inch (10 mm) radius.
      2. Where edges of cutouts will be exposed in finished work; polish edges.
   D. Laminations:
      1. Laminate layers of quartz surfacing as required to create built up edges following procedures recommended by the manufacturer.
9. PRE-INSTALLATION EXAMINATION
   A. Site Verification:
      1. Verify dimensions by field measurements prior to installation.
      2. Verify that substrates supporting quartz surfaces are plumb, level and flat to within 1/8 inch in 10 feet and that all necessary supports and blocking are in place.
      3. Base Cabinets shall be secured to adjoining units and back wall.
10. INSTALLATION
   A. Install materials in accordance with manufacturer's instructions and approved shop drawings.
   B. Preliminary Installation:
      1. Position materials to verify the correct size.
      2. If size adjustments, or additional fabrication is necessary, use water cooled tools. Protect jobsite and surface from dust and water. Perform work away from installation site if possible.
      3. Allow gaps for expansion of not less 1/8 inch per ten feet when installed between walls or other fixed structure.
   C. Permanent Installation:
      1. After verification of fit and finish, clean substrate; remove loose and foreign matter which may interfere with adhesion. Clean quartz surface backside & joints with denatured alcohol.
      2. Horizontal surface: Apply continuous bead of mounting adhesive around perimeter of structural substrate and supports.
      3. Vertical surface: Apply continuous bead of mounting adhesive around perimeter. In addition, apply ¼ inch mounting adhesive bead every 8 inches on vertical center.
      4. Install quartz surfacing plumb, level, square, and flat to within 1/8 inch in ten feet, non-cumulative.
      5. Align adjacent pieces in same plane.
   D. Joints:
      1. Joints between Adjacent Pieces of Quartz Surfacing:
         a. Joints shall be flush, tight fitting, level and neat.
         b. Securely join adjacent pieces with Cambria Two Part Acrylic Adhesive.
         c. Fill joints level to polished surface.
         d. Secure adjacent quartz surfaces with vacuum clamps until adhesive hardens.
      2. Joints Between Quartz Surface and wall, window frames
         a. Seal joints with "50 year" silicone sealant

ARCHITECT:

DAVID SCOTT WINDLE, AIA

6201 CAMPUS CIRCLE DRIVE E.
IRVING, TEXAS 75038
TEL: 972.870.1288
WWW.IDSTUDIO4.COM
E-MAIL scottw@idstudio4.com

CORPORATE:
BRINKER RESTAURANT CORPORATION, A VIRGINIA CORPORATION
3000 OLYMPUS BLVD.
DALLAS, TEXAS 75019
972.980.9917
www.brinker.com

09/23/2024
ISSUE FOR BID
THESE DOCUMENTS ARE FOR BIDDING PURPOSES ONLY. DO NOT USE FOR CONSTRUCTION.

RESTAURANT #CH1679
PROTOTYPE 18.5FS

CHILI'S TOOELE
951 N MAIN STREET
TOOELE, UT 84074

CLIENT: BRINKER RESTAURANT CORP.
A VIRGINIA CORPORATION

DATE	DESCRIPTION
6/27/2024	ISSUE FOR PERMIT
9/23/2024	ISSUE FOR BID

△	DATE	DESCRIPTION

PROJECT NUMBER:
CHI24007

SHEET TITLE:
SPECIFICATIONS
06170 - 06610

SHEET NUMBER:
SP105

DIVISION 07 – THERMAL AND MOISTURE PROTECTION

SECTION 07212 - BOARD AND BATT INSULATION

1. SECTION INCLUDES
   A. Board insulation at cavity wall construction, perimeter foundation wall, and underside of floor slabs.
   B. Batt insulation in exterior wall and ceiling construction.
   C. Batt insulation for filling perimeter window and door shim spaces and crevices in exterior wall and roof.

2. REFERENCES
   A. ASTM C 578 - Standard Specification for Rigid, Cellular Polystyrene Thermal Insulation; 2005a.
   B. ASTM C 665 - Standard Specification for Mineral-Fiber Blanket Thermal Insulation for Light Frame Construction and Manufactured Housing; 2001.
   C. ASTM C 1289 - Standard Specification for Faced Rigid Cellular Polyisocyanurate Thermal Insulation Board; 2006.
   D. ASTM D 2842 - Standard Test Method for Water Absorption of Rigid Cellular Plastics; 2001.
   E. ASTM E 84 - Standard Test Method for Surface Burning Characteristics of Building Materials; 2005.
   F. ASTM E 136 - Standard Test Method for Behavior of Materials in a Vertical Tube Furnace At 750 Degrees C; 2004.

3. BOARD INSULATION MATERIALS
   A. Foundation Insulation: Expanded Polystyrene Board Insulation: ASTM C 578; with the following characteristics:
      1. Flame Spread Index: 75 or less, when tested in accordance with ASTM E 84.
      2. Smoke Developed Index: 450 or less, when tested in accordance with ASTM E 84.
      3. Board Size: 48 x 96 inch.
      4. Single Board Thickness: 2 inch, R-10.
      5. Water Absorption: 4 percent by volume, maximum, when tested In accordance with ASTM D 2842.
      6. Board Density: 0.7 lb/cu ft.
      7. Compressive Resistance: 30 psi.
      8. Thermal Conductivity (k factor) at 25 degrees F: 0.28.
      9. Approved manufacturers:
         a. AFM Corp: www.r-control.com.
         b. Diversifoam Products: www.diversifoam.com.
         c. Grace Construction Products: www.na.graceconstruction.com.
   B. Under Slab Insulation: Styrofoam Brand Freezermate Extruded Polystyrene Board Insulation: Extruded Polystyrene foam, complying with ASTM C 578.
      1. Flame Spread Index: 15 when tested in accordance with ASTM E 84.
      2. Smoke Developed Index: 165, when tested in accordance with ASTM E 84.
      3. Compressive Strength: 30 psi
      4. Board Size: 48 x 96 inch.
      5. Thermal Resistance: R-value of 30, two (2) layers of 3-inch board.
      6. Approved manufacturers:
         a. b. Dow Chemical Co: www.dow.com.

4. BATT INSULATION MATERIALS
   A. Batt Insulation: ASTM C 665; preformed batt; friction fit, conforming to the following:
      1. Combustibility: Non-combustible, when tested in accordance with ASTM E 136, except for facing, if any.
      2. Thermal Resistance:
         a. Walls: R-21 High Density Fiberglass
         b. Roof: R-30
      Thermal Resistance: R of 19 in walls, 30 in roof.
      3. Facing: kraft paper faced, one side.
      4. Approved manufacturers:
         a. CertainTeed Corporation: www.certainteed.com.
         b. Johns Manville Corporation: www.jm.com.
         c. Owens Corning Corp: www.owenscorning.com.

5. ACCESSORIES
   A. Tape: Bright aluminum self-adhering type, mesh reinforced, 2 inch wide.
   B. Insulation Fasteners: Impaling clip of unfinished steel with washer retainer and clips, to be adhered to surface to receive insulation, length to suit insulation thickness and substrate, capable of securely and rigidly fastening insulation in place.
   C. Adhesive: Type recommended by insulation manufacturer for application.

6. BOARD INSTALLATION AT FOUNDATION PERIMETER
   A. Insulate interior face of exterior concrete foundation beams, including returns under floor slab as shown on the drawings. Provide complete insulation membrane around entire building perimeter.
   B. Cut and fit insulation tightly to protrusions or interruptions to the insulation plane.

7. BOARD INSTALLATION UNDER CONCRETE SLABS AT WALK-IN
   A. Place insulation under slabs on grade after base for slab has been compacted.
   B. Cut and fit insulation tightly to protrusions or interruptions to the insulation plane.
   C. Prevent insulation from being displaced or damaged while placing vapor retarder and placing slab.

8. BATT INSTALLATION
   A. Install insulation in accordance with manufacturer's instructions.
   B. Install in exterior wall and roof spaces without gaps or voids. Do not compress insulation.

SECTION 07240 - EXTERIOR INSULATION AND FINISH SYSTEMS

1. SECTION INCLUDES
   A. Manufacturer's requirements for the proper design, use, and installation of a Class PB Water-Drainage Exterior Insulation and Finish System.

2. REFERENCES
   A. ASTM E84 - Test Method for Surface Burning Characteristics of Building Materials.
   B. ASTM E119 - Standard Test Method for Fire Tests of Building Construction and Materials.
   C. ASTM E331 - Test Method for Water Penetration by Uniform Static Air Pressure Difference.
   D. ASTM E2430 - Standard Specification For Expanded Polystyrene ("EPS") Thermal Insulation Boards For Use In Exterior Insulation and Finish Systems ("EIFS")
   E. ASTM E2486 - Standard Test Method for Impact Resistance of Class PB and PI Exterior Insulation and Finish Systems (EIFS)

3. ASSEMBLY DESCRIPTION
   A. Standard Parex USA "WaterMaster LCR – GX" system : Exterior Insulation and Finish System (EIFS) with drainage consisting of Grooved Expanded Polystyrene Insulation (EPS) Board, Mechanical Fasteners, Base Coat with embedded Reinforcing Fabric Mesh, [Primer], and Finish Coat. This system is installed over a code compliant water-resistive barrier.
   B. Functional Criteria:
      1. General:
         a. Insulation Board: At system termination, completely encapsulate insulation board edges by mesh reinforced base coat, substrate, or drainage track (limited to terminations at foundation). The use of and maximum thickness of insulation board shall be in accordance with applicable building codes and EIFS manufacturer's requirements.
         b. Flashing: Flashing shall be continuous and watertight. Flashing shall be designed and installed to prevent water infiltration behind the cladding. Refer to Division 07 Flashing Section for specified flashing materials.
         c. The configuration of the water-resistive barrier, drainage plane and flashing and EIFS materials, must allow for the egress of incidental moisture.
      2. Impact Resistance Classification:
         a. Standard Impact Resistance, 25-49 in-lbs (2.8 – 5.6 J) Impact Range
         b. Medium Impact Resistance, 50-89 in-lbs (5.7-10.1 J) Impact Range
         c. High Impact Resistance, 90-150 in-lbs (10.2-17.0 J) Impact Range
         d. Ultra High Impact Resistance, >150 in-lbs (> 17.0 J) Impact Range
      3. Expansion Joints: Continuous expansion joints shall be installed at the following locations in accordance with manufacturer's recommendations:
         a. At substrate expansion joints.
         b. Where EIFS abuts other materials.
         c. Where significant structural movement occurs, such as at
            (1) Changes in roof line.
            (2) Changes in building shape and/or structural system.
         d. Where substrate changes occur
      4. Manufacturer's Detail:
         a. EIFS most current published information shall be followed for standard detail treatments.
         b. Non-standard detail treatments shall be as recommended by manufacturer, approved by Project Designer and be part of the Contract Documents.
      5. Building Code Conformance: EIFS shall be acceptable for use on this project under the building code having jurisdiction.

4. SUBMITTALS
   A. General: Submit Samples, Evaluation Reports, Warranties and Certificates in accordance with Division 01 General Requirements Submittal Section.
   B. Samples: Submit samples for approval. Samples shall be of materials specified and of suitable size as required to accurately represent each color and texture used on project. Prepare each sample using same tools and techniques for actual project application. Maintain and make available, at job site, approved samples.

5. QUALITY ASSURANCE
   A. Qualifications:
      1. All EIFS assembly materials must be manufactured or sold by a single-source manufacturer and must be purchased direct from the manufacturer or its authorized distributor.
      2. Manufacturer: Shall have marketed Exterior Insulation and Finish Systems in United States for at least ten (10) years and be an active member in good standing of EIMA.
      3. Applicator:
         a. Must possess a current manufacturer's certificate of education.
         b. Must be experienced and competent in installation of plaster-like materials.
   B. Regulatory Requirements:
      1. Insulation Board: Shall be produced and labeled under a third-party quality program as required by applicable building code.

6. DELIVERY, STORAGE, AND HANDLING
   A. Delivery: Deliver materials in original packaging with manufacturer's identification.
   B. Store materials in a cool, dry location, out of sunlight, protected from weather and other harmful environment, and at a temperature above 40°F (4°C) and below 110°F (43°C) in accordance with manufacturer's instructions.

7. PROJECT / SITE CONDITIONS
   A. Installation Ambient Air Temperature: Minimum of 40°F (4°C) and rising, and remain so for 24 hours thereafter.
   B. Substrate Temperature: Do not apply materials to substrates whose temperature are below 40°F (4°C) or contain frost or ice.
   C. Inclement Weather: Do not apply materials during inclement weather unless appropriate protection is employed.
   D. Sunlight Exposure: Avoid, when possible, installation of the materials in direct sunlight. Application of Acrylic Finishes in direct sunlight in hot weather may adversely affect aesthetics.
   E. Materials shall not be applied if ambient temperature exceeds 120°F (49°C) or falls below 40°F (4°C) within 24 hours of application. Protect materials from uneven and excessive evaporation during hot, dry weather.
   F. Prior to installation, the substrate shall be inspected for surface contamination, or other defects that may adversely affect the performance of the materials and shall be free of residual moisture.

8. WARRANTY
   A. Warranty: Upon request, at completion of installation, provide manufacturer's Standard Limited Warranty and Colorfast Technology fade-resistant warranty.

9. MANUFACTURERS
   A. Manufacturer: Parex USA, Inc., 4125 E. La Palma Ave., Suite 250, Anaheim, CA 92807 Contact: Randy Campbell, Architectural Sales & National Accounts Manager (714.778.2266 ext. 3952) or Technical Support (800.226.2424).
   B. Components: Obtain components from authorized distributors. No substitutions or additions of other materials are permitted without prior written permission from the EIFS manufacturer for this project.

10. MATERIALS .
    A. Secondary Water-Resistive Barrier
       1. A code compliant water-resistive barrier and means of drainage.
    B. Grooved Insulation Board: In compliance with manufacturer's requirements for Standard System EIFS.
       1. Produced and labeled under a third-party quality program as required by applicable building code; and produced by a manufacturer approved by Parex USA.
       2. Shall conform to ASTM C578 and ASTM E2430, Type I and the Parex USA specification for Molded Expanded Polystyrene Insulation board.
       3. Thickness: 1.5 in , minimum (38 mm) after rasping.
       4. Profile: Minimum 1/4-inch-wide by 1/8-inch-deep vertical grooves spaced a maximum of 12 inches on the back face of the board.
    C. Base Coats:
       1. Parex 121 Dry Hi: High Impact basecoat & adhesive. Copolymer based, blend of cement and proprietary ingredients, requires the addition of water.
    D. Reinforcing Mesh:
       1. 355 Standard Mesh: Weight 4.5 oz. per sq. yd. (153 g/sq m); coated for protection against alkali. Standard reinforcement of Parex EIFS, or for use with High Impact 358.14 Mesh, or Ultra High Impact 358.20 Mesh.
       2. 356 Short Detail Mesh: Reinforcing mesh used for backwrapping and details.
       3. 352 Self Adhesive Detail Mesh: Reinforcing mesh used for complex details.
       4. 358.20 Ultra High Impact 20 Mesh: Weight 20 oz. per sq. yd. (678 g/sq m) Reinforcing mesh used with a Standard System; to achieve ultra-high impact strength.
       5. 357 Corner Mesh: Reinforcing mesh used as corner reinforcement; required when using Ultra-High Impact 20 Mesh.
          Locations: From Ground level to 7'-0" aff use 358.20 Ultra High Impact 20 Mesh; From 7'-0" aff to top of parapet use 355 Standard Mesh.
    E. Primer:
       1. 310 Primer: 100% acrylic based coating to prepare surfaces for acrylic or elastomeric finishes.
    F. Finish
       1. Parex AquaSol: 100% acrylic polymer-based finish, enhanced DPR acrylic finish with hydrophobic and photocatalytic properties. Finish type, texture and color as noted on the drawings.
    G. Water: Clean, cool, potable water
    H. Portland Cement: ASTM C150, Type I or Type I-II.

11. ACCESSORIES
    A. Mechanical fasteners and washers:
       1. Wind-lock Wind Devil 2 fasteners, non-thermal bridging polypropylene plastic plates and corrosion-resistant screws.
    B. Sealant System:
       1. Sealant for expansion joints between panelized EIFS sections shall be ultra-low modulus designed for minimum 100% elongation and minimum 50% compression and as selected by Project Designer.
       2. Sealant for perimeter seals around window and door frames and other wall penetrations shall be low modulus, designed for minimum 50% elongation and minimum 25% compression, and as selected by Project Designer.
       3. Sealants shall conform to ASTM C 920, Grade NS.
       4. Perimeter seal joints shall be a minimum width of 1/2 in (12.7 mm).
       5. Sealant backer rod shall be closed-cell polyethylene foam.
       6. Apply sealant to tracks or base coat of EIFS.
       7. Refer to EIFS manufacturer's current bulletin for listing of sealants which have been tested and have been found to be compatible with EIFS materials.
       8. Color shall be as noted on the drawings.

12. EXAMINATION
    A. Compliance: Comply with manufacturer's instructions for installation.
    B. Substrate Examination: Examine prior to installation of EIFS assembly materials per manufacturer's written instructions.
    C. Sealants and Backer Rod: To be installed, where required, in accordance with the sealant manufacturer's specifications and published literature, and using the sealant manufacturer's recommended primers.
    D. Advise Contractor of discrepancies preventing proper installation of the EIFS materials. Do not proceed with the work until unsatisfactory conditions are corrected.

13. MIXING
    A. Mix materials in accordance with manufacturer's instructions.

14. APPLICATION
    A. General: Installation shall conform to this specification and manufacturer's written instructions.
    B. Drainage Accessories and Water-Resistive Barrier
       1. Install drainage tracks back-wrap mesh, or edge-wrap mesh at system terminations.
       2. Install water-resistive barrier in accordance with manufacturer's instructions making all laps weatherboard fashion to provide continuity of watershedding.
    C. Insulation Board
       1. Install Wind-lock fasteners to secure insulation board to the wall in accordance with Wind-lock Corporation instructions. For exterior grade gypsum sheathing and glass mat gypsum sheathing minimum screw penetration of framing members shall be 3/4 in (19 mm) into wood and three full threads through steel. Minimum eight (8) fasteners per 2' x 4' (610 mm x 1219 mm) piece of insulation board.
       2. Install insulation board without gaps in a running bond pattern and interlocked at corners.
       3. Rasp irregularities off insulation board.
    D. Apply primer to base coat after drying. Primer may be omitted if it is not required by the manufacturer's product data sheets for the specified finish coat or otherwise specified for the project.
    E. Finish Coat: Apply finish coat to match specified finish type, texture, and color. Do not apply finish coat to surfaces to receive sealant. Keep finish out of sealant joint gaps.

SECTION 07250 - SILL SEALER GASKET

1. SECTION INCLUDES
   A. Sill sealer gasket at exterior walls.

2. DELIVERY, STORAGE AND HANDLING
   A. Store sill sealer in a dry area above 60º before use.

3. SILL SEALER
   A. Sill sealer "Protecto Triple Guard Energy Sill Sealer by Protecto Wrap (1-800-759-9727). Protecto Triple Guard Energy Sill Sealer is available in 3 ½" and 5 ½" widths and is ¼" thick.

4. ACCESSORIES
   A. Primer: #100 Primer by Protecto Wrap.

5. PREPARATION
   A. Areas to be sealed must be clean and dry. Knock off and remove any rough or jagged edges.

6. INSTALLATION
   A. Roll out Protecto Energy Plate Liner and align with perimeter of slab. Peel off the release liner from the bottom of the Energy Plate Liner and place the exposed adhesive side down on top of the foundation.
   B. Pressing the adhesive bottom of the Protecto Energy Plate Liner in place is essential to properly adhere the product to the foundation.
   C. For re-bar or anchor bolts coming out of the foundation, make an "X" cut in the back of the Protecto Energy Liner and slide over the protrusion, pressing firmly in place.

7. COLD WEATHER REQUIREMENTS
   A. For installations below 40º F:
      1. Keep Protecto Energy Plate Liner Sill Sealer in a warm heated space above 60º F before use.
      2. Prime the top of the foundation with #100 Primer and allow primer to tack up. Do not apply Energy Plate Liner to wet primer.
      3. Peel and stick the Protecto Energy Plate Liner Sill Sealer in place
      4. Protecto Wrap Protecto-Tak 16.25 oz. Spray adhesive may be used in place of #100 Primer.

SECTION 07260 - WEATHER BARRIERS

1. SECTION INCLUDES
   A. Vapor Barrier must have all of the following qualities:
      1. Permeance of less than 0.01 Perms [grains/(ft2 *hr * in.Hg)] per ASTM F 1249 or ASTM E 96
      2. ASTM E 1745 Class A
   B. Air Barriers: Materials to stop passage of air through exterior walls, joints between exterior walls and roof, and joints around frames of openings in exterior walls to comply with ICC-ES Acceptance Criteria AC-38.

2. SHEET SEAL MATERIALS
   A. Vapor Retarder: Stego Wrap Vapor Barrier (15-mil) by Stego Industries LLC for underslab applications.
   B. Air Barrier: Commercial Wrap as manufactured by Dupont Tyvek "Stucco-Wrap" for vertical wall applications.
   C. Moisture Barrier: 30 lb felt for horizontal applications.

3. ACCESSORIES
   A. Vapor Retarder Seam Tape:
      1. Permeance less than 0.3 perms per ASTM F 1249 or ASTM E 96
      2. Stego Tape by Stego Industries LLC
   B. Air Barrier Seam Tape:
      1. Permeance less than 0.3 perms per ASTM F 1249 or ASTM E 96
      2. Tyvek Seam Tape
   C. Pipe Boots
      1. Construct pipe boots from vapor barrier material, pressure sensitive tape and/or mastic per manufacturer's instructions.

4. INSTALLATION
   A. Install materials in accordance with manufacturer's instructions.

SECTION 07411 - PREFORMED METAL ROOFING

1. SECTION INCLUDES
   A. Batten Seam roof panels
   B. Standing Seam roof panels
   B. Matching metal trim and flashings
   C. Concealed fasteners
   D. Shop drawings
   E. Samples

2. REFERENCES
   A. SMACNA (ASMM) - Architectural Sheet Metal Manual; Sheet Metal and Air Conditioning Contractors' National Association.
   B. ASTM A792-89: Standard Specification for Steel Sheet, Aluminum-Zinc Alloy Coated by the Hot Dip Process, General Requirements

3. SUBMITTALS
   A. Submit Shop Drawings per SUBMITTALS Section prior to fabrication, for Owner's acceptance. Show panel layout, gauges, profiles, fastener types and locations, and flashing details.
   B. Submit samples of panel proposed with color samples on actual material, for Owner's acceptance and color selection.

4. QUALITY ASSURANCE
   A. Wind Uplift: Provide roof panel system including supports meeting requirements of Underwriters Laboratories, Inc. for Class 90 wind uplift resistance.

5. WARRANTY
   A. Metal panel manufacturer, upon final acceptance for project, shall furnish a warranty covering bare metal against rupture, structural failure, and perforation due to normal atmospheric corrosion exposure for a period of 20 years from the date of Substantial Completion.
   B. Metal panel manufacturer, upon final acceptance for project, shall furnish a warranty covering panel finish against cracking, checking, blistering, peeling, flaking, chipping, chalking, and fading for a period of 20 years from the date of Substantial Completion.

6. BATTEN SEAM ROOF PANELS
   A. General: Provide factory-formed metal roof panel assembly designed to be installed by covering vertical side edges of adjacent panels with battens and mechanically attaching panels to supports using concealed clips. Include battens and accessories required for weathertight installation.
   B. Snap-on-Batten-Seam Metal Roof Panels: Formed with vertical ribs at panel edges and a flat pan between ribs; designed for independent installation by mechanically attaching panels to supports using concealed clips located between panels, engaging the opposite edge of adjacent panels, and installing snap-on battens over panel joints.
      1. Berridge Manufacturing Company, San Antonio, TX.: Batten Seam System
      2. Metallic-Coated Steel Sheet: Aluminum-zinc alloy-coated steel sheet complying with ASTM A 792/A 792M, Class AZ50 coating designation; structural quality. Pre-finished by the coil-coating process to comply with ASTM A 755/A 755M.
         a. Nominal Thickness: 22-Gauge, ASTM 792-08, Grade 40, yield strength 40 ksi min.
         b. Exterior Finish: Three coat Hylar 5000™ fluoropolymer coating applied by the manufacturer on a continuous coil coating line.
         c. Color: As noted on Finish Schedule in the drawings
      3. Batten Material: Same material, finish, and color as roof panels.
      4. Clips: One-piece fixed to accommodate thermal movement.
         a. Material: 0.025-inch thick, stainless-steel.
      5. Panel Coverage: 16 inches.
      6. Batten Height: 1.75 inches high by 2.0 inches high.

7. STANDING SEAM ROOF PANELS
   A. General: Provide factory-formed metal roof panels designed to be installed by lapping and interconnecting raised side edges of adjacent panels with joint type indicated and mechanically attaching panels to supports using concealed clips in side laps. Include clips, cleats, pressure plates, and accessories required for weathertight installation.
   B. Vertical-Rib, Seamed-Joint, Standing-Seam Metal Roof Panels:: Formed with vertical ribs at panel edges and a flat pan between ribs; designed for sequential installation by mechanically attaching panels to supports using concealed clips located under one side of panels, engaging opposite edge of adjacent panels, and mechanically seaming panels together.
      1. Berridge Manufacturing Company, San Antonio, TX.: ZEE-Lock 90-degree seam system
      2. Metallic-Coated Steel Sheet: Aluminum-zinc alloy-coated steel sheet complying with ASTM A 792/A 792M, Class AZ50 coating designation; structural quality. Pre-finished by the coil-coating process to comply with ASTM A 755/A 755M.
         a. Nominal Thickness: 22-Gauge, ASTM 792-08, Grade 40, yield strength 40 ksi min.
         b. Exterior Finish: Three coat Hylar 5000™ fluoropolymer coating applied by the manufacturer on a continuous coil coating line.
         c. Color: As noted on Finish Schedule in the drawings
         b. Clips: One-piece fixed to accommodate thermal movement. Material: 0.025-inch thick, stainless-steel.
      3. Panel Width: 12 inches.
      4. Standing Seam Height: 1.5 inches high

8. METAL TRIM AND FLASHINGS
   A. Fabricate from same thickness and finish material as roofing panels.

9. FASTENERS
   A. Concealed, corrosion resistant, weather tight, type and size required by manufacturer's specifications. Stainless steel fastening shall be used for connecting dissimilar metals.

10. CLOSURES
    A. Manufacturer's standard, match panels, to fit configuration of the panel specified.

11. UNDERLAYMENT
    A. W.R. Grace Company, Ice and Water Shield

12. JOINT SEALANTS
    A. As specified in SEALANTS AND CAULKING.

13. HANDLING
    A. Perform in a manner to prevent bending, warping, twist- or other damage. Do not use damaged or bent materials.

14. STORAGE
    A. Store units on raised support and protect from weather.

15. WORKMANSHIP
    A. Use only skilled and experienced personnel. Workmanship shall be equal to the best practice of modern metal roofing installation.

16. INSTALLATION
    A. General Requirements:
       1. Roofing Sheets: Provide the finished dimensions, seam to seam. Furnish continuous sheets. Single pieces less than eight (8) feet long may be used to connect to shop fabricated inside and outside corners.
       2. Installation: Install panels weather tight, without waves, warps, buckles, fastening stresses or distortion, allowing for expansion and contraction. Installation shall be in strict accordance with manufacturer's written instructions and approved shop drawings.
       3. Dissimilar Materials Contract: Where sheet metal is shown contracting concrete, masonry materials, steel, other dissimilar metal, or is contacting wood, keep sheet metal from direct contact with the dissimilar materials by a coat of bituminous paint applied to a thickness of 12 to 14 mils.
    B. Roofing:
       1. Underlayment: Cover roof decks to receive metal roofing with one layer of underlayment. Turn underlayment up 8 inches on abutting vertical surfaces. Double underlayment in valleys, over hips and at ridges. Fasten to roof decks and sheathing per manufacturer's written standards.
       2. Metal Roofing Panels: Lay sheets with long dimension as indicated on the drawings. Stagger cross seams in adjacent strips. Secure metal to decking with approved fasteners.
          a. Seams: Make finished seams straight, uniform and accurately spaced.
          b. Gable and Rake Edges: Hook edges of roofing sheets over previously installed continuous edge strip, unless detailed otherwise on the drawings.
          c. Eaves: Same as for gable and rake edges.
          d. Abutting Walls: Form a loose-locked joint near the wall line with a cleated base flashings. Extend metal base flashings up on vertical surfaces at least six (6) inches and terminate as indicated.
          e. Cutting and Fitting: Cutting, fitting, drilling, and other operations in connection with sheet metal required to accommodate the work of other trades shall be performed by sheet metal mechanics.
          f. Flashing: Install at intersections of roof with vertical surfaces and at projections through roof. Where sheet metal abuts or extends into adjacent materials, the juncture shall be executed in a manner to assure weather-tight construction.

SECTION 07460 - FIBER-CEMENT SIDING AND TRIM

1. SECTION INCLUDES
   A. Fiber cement siding panels, trim, fascia, soffit and accessories.

2. ENGINEERING DESIGN
   A. Subcontractor for the work of this Section shall be responsible for final design of installation systems and shall insure proper design for spacing of sub-framing and all attachments. Subcontractor must have not less than three (3) years successful experience in installation of similar cladding systems.

3. REFERENCE STANDARDS
   A. American Society for Testing Materials (ASTM)

4. SUBMITTALS
   A. Submit Shop Drawings per SUBMITTALS Section prior to fabrication, for Owner's approval. Drawings shall show finish, profiles, fastener types and locations, and flashing details.
   B. Submit sample panel of proposed construction along with color samples on actual material for approval.

5. WARRANTY
   A. Product Warranty: Limited product warranty against manufacturing defects.
      1. Hardieplank lap siding and Hardisoffit panels for 50 years.
      2. HardieTrim for 10 years.
   B. Workmanship Warranty: Application warranty for 2 years.

6. COORDINATION
   A. Contractor shall be responsible for dimensions, detailing, fabrication, fitting and alignment of the work of this Section.

7. MANUFACTURER
   A. The Drawings were prepared and this Specification written on the basis of using the products of James Hardie Building Products, Inc., Mission Viejo, CA. www.jameshardiecommercial.com. Products with equal characteristics by other manufacturers are acceptable under the conditions of these Specifications.

8. PRODUCTS
   A. Fiber cement siding panels, trim, fascia, soffit and accessories shall be composed of autoclaved, non-asbestos, fiber-cement complying with the provisions of ASTM C1186. Products shall provide the following minimum properties: Modulus of Rupture (equilibrium) >1450 psi, ASTM C1185; Density 80 pcf ASTM C1185; Flame Spread/Smoke Development 0/0 ASTM E84.
   B. Refer to Finish Schedule on drawings for specific products, finish, sizes, etc... for all Fiber cement siding panels, trim, fascia, soffit products used on project.
   C. Factory Primer: Provide factory applied universal primer.

9. FASTENERS
   A. Concealed, galvanized, corrosion resistant, type and size required by design.

10. JOINT SEALANTS
    A. As specified in SEALANTS AND CAULKING

11. HANDLING
    A. Perform in a manner to prevent bending, warping, twisting or other damage. All material shall be clean and straight. Damaged or bent materials shall not be used.

12. STORAGE
    A. Store units on raised support and protect from the weather.

13. WORKMANSHIP
    A. Use only skilled and experienced personnel. All workmanship shall be equal to the best practice of modern siding installation.

14. ERECTION
    A. Erect in complete accord with approved shop drawings and manufacturer's written instructions. Use full length panels whenever possible to minimize end joints.

SECTION 07530 - ELASTOMERIC MEMBRANE ROOFING

1. SECTION INCLUDES
   A. Elastomeric roofing membrane, mechanically fastened conventional application.
   B. Insulation, flat and tapered.
   C. Prefabricated flashings, corners, parapets, stacks, vents, and related details.
   D. Fasteners, adhesives, and other accessories required for a complete roofing installation.
   E. Traffic Protection.

2. REFERENCES
   A. ASTM C 1289 - Standard Specification for Faced Rigid Cellular Polyisocyanurate Thermal Insulation Board; 2006.
   B. NRCA ML104 - The NRCA Roofing and Waterproofing Manual; National Roofing Contractors Association; Fifth Edition, with interim updates.
   C. UL (RMSD) - Roofing Materials and Systems Directory; Underwriters Laboratories Inc.; current edition.

3. QUALITY ASSURANCE
   A. Perform work in accordance with NRCA Roofing and Waterproofing Manual and manufacturer's instructions.

4. SUBMITTALS
   A. Submit under provisions of Section 01330.
   B. Manufacturer's data sheets on each product to be used, including:
      1. Preparation instructions and recommendations.
      2. Storage and handling requirements and recommendations.
      3. Installation methods.
      4. Maintenance requirements.
   C. Manufacturer's Certificates: Certify products meet or exceed specified requirements.
   D. Installer Certification: Certification from the roofing system manufacturer that Installer is approved, authorized, or licensed by manufacturer to install roofing system having the status of Master or Elite designation.
   E. Manufacturer's warranties.

5. ENVIRONMENTAL REQUIREMENTS
   A. Do not apply roofing membrane during unsuitable weather.
   B. Do not apply roofing membrane when ambient temperature is below 40 degrees F or above 110 degrees F.
   C. Do not apply roofing membrane to damp or frozen deck surface or when precipitation is expected or occurring.
   D. Do not expose materials vulnerable to water or sun damage in quantities greater than can be weatherproofed the same day.

6. WARRANTY
   A. Provide manufacturer's standard written full roofing system repair and/or replacement 15-year NDL warranty at no additional cost, covering materials and labor. Warranty shall include loss of consequential damages due to failure of the roof system and contain no exclusions for ponding water or biological growth. Upon warranty inspection and acceptance of the roof, the warranty shall be turned over to the Contractor on behalf of Owner by a Manufacturer's Quality Assurance Specialist.
   B. Notice of Award: Contractor shall submit a "Notice of Award" to Manufacturer at least (10) ten days prior to the beginning of a particular roof application. Contractor will then provide to Owner a copy of the filed Notice of Award which has been signed and conditionally accepted by Manufacturer prior to the start of work under this section.

7. APPROVED MANUFACTURERS
   A. Duro-Last Roofing, Inc., 525 Morley Dr. P. O. Box 3301 ; Saginaw, MI 48601; Toll Free Tel: 800-248-0280; Contact: Jim Miller, Email: corporateaccounts@duro-last.com; Web: www.duro-last.com

8. ROOFING
   A. Elastomeric Membrane Roofing Systems:
      1. Duro-Last Roofing Membrane conforming to ASTM D 4434, Type III or IV, fabric reinforced, PVC.
      2. Properties:
         a. 50 mil nominal thickness at roof deck. No exceptions
         b. 50 mil nominal thickness at parapets. No exceptions.
         c. Exposed Face Color: White on all Horizontal roof surfaces and Duro-Tuff Charcoal Grey on vertical surfaces. No exceptions
   B. Roofing Assembly Requirements:
      1. Roof Covering External Fire-Resistance Classification: UL Class A.
      2. Insulation Thermal Value (R), minimum: R-30; provide insulation of thickness required.
   C. Acceptable Insulation Types:
      1. Two layers of 2.6-inch thick EnergyGuard roof insulation, glass fiber reinforced polyisocyanurate foam roof insulation (Total R value Min. R-30). Run second layer perpendicular to the first layer to minimize joint overlap. Provide tapered insulation, crickets and saddles to form counter slopes indicated on Drawings.

9. ACCESSORIES
   A. Sheet Flashing: Duro-Last white 40-mil reinforced PVC Duro-Last Parapet Flashing membrane with 28" tabs
   B. Prefabricated Flashing: Prefabricated white stack flashings for pipes, wind screen support pipes, and curbs, corners of Duro-Last white 40-mil reinforced PVC sheet membrane. Stack flashings to be installed using stainless steel Panduit bands and Duro-Caulk Plus.
   C. Prefabricated inside and outside corner of Duro-Last white 40-mil reinforced PVC sheet membrane.

ARCHITECT:

DAVID SCOTT WINDLE, AIA

6201 CAMPUS CIRCLE DRIVE E.
IRVING, TEXAS 75038
TEL: 972.870.1288
WWW.IDSTUDIO4.COM
E-MAIL scottw@idstudio4.com

CORPORATE:
BRINKER RESTAURANT CORPORATION, A VIRGINIA CORPORATION
3000 OLYMPUS BLVD.
DALLAS, TEXAS 75019
972.980.9917
www.brinker.com

09/23/2024
ISSUE FOR BID
THESE DOCUMENTS ARE FOR BIDDING PURPOSES ONLY. DO NOT USE FOR CONSTRUCTION.

RESTAURANT #CH1679
PROTOTYPE 18.5FS

CHILI'S TOOELE
951 N MAIN STREET
TOOELE, UT 84074

CLIENT: BRINKER RESTAURANT CORP. A VIRGINIA CORPORATION

DATE	DESCRIPTION
6/27/2024	ISSUE FOR PERMIT
9/23/2024	ISSUE FOR BID

△	DATE	DESCRIPTION

PROJECT NUMBER:
CHI24007

SHEET TITLE:
SPECIFICATIONS
07212 - 07530

SHEET NUMBER:
SP106

D. Pillow block to be supplied by Install 'Roof Top Blox' adjustable piping support under all gas and condensate piping, Ph: (860) 979-0345; www.rooftopblox.com.
E. New 4" x 4" wolmanized block support to be installed underneath condensing unit. A slipsheet should be to be installed under the womanized block. High wind locations to have metal support rack. See roof plan.
F. Sealants and Adhesives: Duro-Caulk Plus, pitch pocket filler, Sure Bond 240 mastic as supplied by Duro-Last Roofing Inc.
G. Slip Sheet and Cover Boards: Slip sheet or cover boards, of type required by roof membrane manufacturer for the application.
H. Termination Bars: Standard rigid exterior vinyl bar, 1.5 inches (38 mm) wide with slotted holes 6 inches (152 mm) on center.
I. Scuppers: Prefabricated Duro-Last® Vinyl-Coated Metal Flange Scuppers with single skirt.
J. Dome Strainer: See Plumbing Fixture Schedule in Drawings. Proper sized drain boot should also be installed using Duro-Caulk Plus and CDR ring.
K. Edge Detail: Exceptional Metals Fascia bar and cover, prefabricated Drip Edge, prefabricated Gravel Stop, 2-Piece Snap-On Compression LG Metal Edge. Aluminum 40 Gauge – Finish and Size as indicated on drawings.
L. Vinyl Coated Metal: 24 gauge, hot-dipped galvanized, grade 90 metal with a minimum of 17 mil of Duro-Last membrane laminated to one side.
M. ATR hub: made of 24 gauge Vinyl coated metal to be installed around refrigeration lines
N. Fasteners: #14 Heavy-Duty factory-coated steel fasteners and metal and plastic plates meeting corrosion-resistance provisions in FMG 4470, designed for fastening membrane to substrate.
O. Two-Way Roof Vents: As recommended by roof membrane manufacturer and installed with a minimum of 1 vent for each 1,000 square-feet of roof area. Vents will be white.
P. Roof Trac III walkway pads by Duro-Last Roofing - 30" x 60" and 60 "x 60 "gray, non-skid, maintenance-free Roof Trac III walkway pads to be installed at mechanical equipment, roof hatch and roof ladder as shown on roof plan.
Q. Duro-Guard plenum vent.

10. SUBSTRATE BOARD (NOTED ON DRAWINGS AS PROTECTION BOARD):
A. Duro-Guard "DEXCELL" Glass Mat ¼" thick as manufactured by Duro-Last.

11. EXAMINATION
A. Verify that surfaces and site conditions are ready to receive work.
B. Verify deck is clean and smooth, flat, free of depressions, waves, or projections, properly sloped and suitable for installation of roof system.
C. Verify deck surfaces are dry and free of snow or ice.
D. Verify that roof openings, curbs, and penetrations through roof are solidly set.

12. INSULATION - UNDER MEMBRANE
A. Roof insulation shall be installed with approved fasteners and distribution plates placed according to the manufacturer's most recent published specifications for the use under the manufacturer's system and for issuance of the warranty.
B. Attachment of Insulation:
1. Mechanically fasten insulation to deck in accordance with roofing manufacturer's instructions.
C. Stagger insulation boards 50% from row to row.
D. Lay boards with edges in moderate contact without forcing. Cut insulation to fit neatly to perimeter blocking and around penetrations through roof.
E. Separation Layer: Install substrate board directly over the roofing insulation in accordance with roof membrane manufacturer's requirements.
F. Do not apply more insulation than can be covered with membrane in same day.

13. MEMBRANE APPLICATION
A. Install the roofing system to comply with manufacturer's most recent published specifications.
B. Roll out membrane, free from wrinkles or tears. Place sheet into place without stretching.
C. Mechanical Attachment: Apply membrane and mechanical attachment devices in accordance with manufacturer's instructions.
D. On all parapet locations, wrap parapet with new pre-manufactured parapet flashings by manufacturer and terminate on exterior of wall.
E. Around roof penetrations, seal flanges and flashings with flexible flashing.

14. WALKWAYS
A. Install walkways in accordance with roof membrane manufacturer's requirements.
B. Install at roof hatches, access doors, rooftop ladders and all other traffic concentration points regardless of traffic frequency. Provided in areas receiving regular traffic to service rooftop units or where a passageway over the surface is required.
C. Do not install walkways over flashings or fields seams until field inspections by roof membrane manufacturer have been completed.

15. FASCIA/DRIP EDGE/GRAVEL STOP
A. Provide fascia bar and cover, drip edge and gravel stop.
B. Seal joints between individual sections.
C. Manufactured Roof Specialties: Coordinate installation of copings, counter flashing systems, gutters, downspouts, and roof expansion assemblies specified in Section 07600.

16. PILLOWBLOCKS
A. Install "Pillowblock" stackable pipe support under all gas and condensate piping.
B. Install Pillowblock units on top of a compatible slipsheet membrane.

17. PARAPET WALLS
A. Contractor shall encapsulate all parapet walls using 50 mil Duro-Tuff 'Charcoal Gray' single ply membrane roofing system and a 6" white skirt that is fabricated of a weft inserted, low-shrink, anti-wicking polyester fabric and has a thermoplastic coating of PVC material laminated to both sides as manufactured by Duro-Last Roofing, Inc. in accordance with Duro-Last Roofing, Inc. published specifications.

18. PROTECTION
A. Protect installed roofing and flashings from construction operations.
B. Where traffic must continue over finished roof membrane, protect surfaces using durable materials.

SECTION 07620 – SHEET METAL FLASHING AND TRIM

1. SECTION INCLUDES
A. Shop or field-formed sheet metal work for moisture protection.
B. Mechanical equipment support curb Sheet metal caps and flashings.
C. Other metal flashings indicated on the drawings.
D. Flexible flashing

2. REFERENCES
A. ANSI/SPRI ES-1 - Wind Design Standard for Edge Systems Used with Low Slope Roofing Systems.
B. Florida Building Code, including the High Velocity Hurricane Zone.
C. Miami-Dade County NOA No. 03-0108.06.
D. Factory Mutual Research Corporation Approval Guide.
E. SPRI Single Ply Roofing Industry Standards.

3. COORDINATION
A. Flashing and Sheet metal work in contact with roofing shall be installed by the roofing contractor who applies the roofing or by a subcontractor approved by or employed by him.

4. PRODUCT DELIVERY, STORAGE AND HANDLING
A. Delivery of Materials: Manufactured products shall be delivered in original, unbroken packages, containers or bundles bearing the name of the manufacturer in a manner that will prevent damage to the products.
B. Storage: Products shall be carefully stored in a protected area that will prevent damage or marring of the products and their finishes.

5. BASIC MATERIALS
A. Sheet metal:
1. Galvanized Steel Sheet: "PAINTLOK" or "ZINC-GRIP", commercial quality with 0.20 percent copper, in accordance with ASTM A 526 except ASTM A 527 for lock forming; coating designation G90 hot-dip galvanized, and mill phosphatized for painting in accordance with ASTM A 525 (paint-grip type), 24 gauge minimum.
2. Sheet Lead: FS QQ-L-201, Grade B; 2-1/2 pound per square foot minimum as used for sanitary vent flashing, 4 pound per square foot minimum as used for roof drains.
3. All exposed sheet metal edges shall be hemmed 1/2-inch on underside.
B. Flexible Flashing: Grace Construction Products, Cambridge, MA. "Perm-A-Barrier Wall Flashing" self-adhered flexible flashing.
C. Stucco/EIFS Parapet Waterproofing: Grace Construction Products, Cambridge, MA, "Perm-A-Barrier Wall Flashing", self-adhered waterproofing membrane.

6. MISCELLANEOUS MATERIALS
A. Fasteners:
1. Fasteners shall be same metal as flashing and sheet metal or noncorrosive metal.
2. Exposed fasteners shall be self-sealing or gasketed for watertight installation.
3. Heads of fasteners, including but not limited to, rivets, screws, and bolts, that are exposed or visible shall have same manufactured finishes as item being secured; color to match when applicable.
4. Mechanical Fasteners:
a. Washers: Steel washers with bonded rubber sealing gasket.
b. Screws: Self-tapping sheet metal type compatible with material fastened.
c. Rivets: Stainless steel material for the head and stem, closed end, type and size as recommended by sheet metal manufacturer.
B. Solder: ASTM B 32, Alloy Grade 58, 50 percent tin, 50 percent lead for use with galvanized sheet.
C. Soldering Flux:
1. Phosphoric acid type, manufacturer's standard.
2. For use with Steel or Copper: Rosin flux.
D. Mastic: Asphaltic plastic roofing cement, ASTM D 4586, asbestos free.
E. Bituminous Paint: ASTM C1187, NA-TAZ, Pure Asphalt Company, Chicago, Illinois, or equal.
F. Metal Accessories: Sheet metal clips, straps, anchoring devices, and similar accessory units as required for installation of work, matching or compatible with material being installed, noncorrosive, size and gauge required for performance.

7. SHEET METAL MINIMUM GAUGES
A. Gauges are based on galvanized Sheet metal. Where other metal is used, use equivalent weights in tables in Sheet Metal Manual. Based on galvanized Sheet metal. Following are minimum weights for work specified herein:

ITEMS	GAUGE
1. Hook strips	22
2. Joint covers	22
3. Cap flashing	22
4. Special flashing	22
5. Window sill flashing	22
6. Downspouts	24
7. Gutters	24

8. DISSIMILAR MATERIALS CONTACT
A. Where Sheet metal is shown contacting concrete, masonry materials, steel, other dissimilar metal, or is contacting wood, keep Sheet metal from direct contact with the dissimilar materials by a coat of bituminous paint applied to a thickness of 15 mils.

9. FABRICATION - GENERAL:
A. Fabricate work in accordance with SMACNA Architectural Sheet Metal Manual and other recognized industry practices and reviewed shop drawings.
B. Shop fabricate work to greatest extent possible. Fabricate inside and outside corners for metal edges, counterflashing, and coping caps.
C. Fabricate for waterproof and weather resistant performance with expansion provisions for running work sufficient to permanently prevent leakage, damage, or deterioration of work. Field measure and form work to fit substrates.
D. Make angle bends and folds for interlocking metal with full regard for expansion and contraction to avoid buckling or fullness in metal after installation.
E. Form materials with straight lines, sharp angles, smooth curves, and true levels. Avoid tool marks, buckling, and oil canning.
F. Fold back edges on concealed side of exposed edge to form a minimum ½-inch hem.
G. Lap joints 1-inch minimum. Rivet and solder joints on parts that are to be permanently and rigidly assembled.
H. Seams:
1. Fabricate non-moving seams in sheet metal with flat-lock seams.
2. Pre-finished Galvanized Steel: Seal pre-finished metal seams with rivets and silicone sealant.
3. Metal Other than Aluminum: Tin edges to be seamed, form seams, and solder.

10. FABRICATED ITEMS:
A. Counterflashings: Minimum 24-gauge galvalume steel formed in maximum 10-foot lengths. Utilize two-piece reglet configurations at masonry walls.
B. Wind Clips: Minimum 22-gauge galvanized steel, 1-inch wide, length to engage counterflashing a minimum of 1/2-inch.
C. Roof Penetration and Umbrella Counterflashing: Minimum 24-gauge galvanized steel, two-piece construction, fabricated in accordance with project drawings.
D. Continuous Cleats: Continuous strips, same base material, and fascia profile, and 22 gauge.
E. Vent Hoods, Sleeves, Penetration Flashings, and Accessories: Minimum 24-gauge galvanized steel with 4-inch flanges with rounded corners.
F. Angle Termination Bar: 1-inch by 1-inch 24-gauge galvanized steel.
G. Vent Pipe: Duro-Last boot with 4-inch flanges. Provide proper size to fold down inside of pipe a minimum of 1-inch.
H. Pipe Flashing: 24-gauge galvanized steel.
I. Penetration Flashing Pans: 24-gauge galvanized steel. Fabricate with 1/4-inch hem at top edge and with 4-inch flanges with rounded corners. Fabricate to provide installed minimum clear inside perimeter dimension of 2-inches on each side of penetrating element and 6-inch height.
J. Roof Drain: 4-pound lead, size 30-inch by 30-inch.
K. Coping Cap Metal: An edge metal system that offers an attractive parapet finished look utilizing a Galvalume 24 gauge continuous and or 16-gauge cleat segment for coping attachment. Covers are available in Kynar, Galvalume Plus, and Bonderized finishes.
1. Construction:
a. Coping Cap Cover Metal Gauge Options:
.040 inch (1mm) thick formed aluminum.
b. Coping Finish: Standard PVDF 70% as selected by the Owner from roof edge manufacturer's color chart.
c. Coping Continuous Cleat Gauge Options: Produced with pre-punched holes to ensure proper fastening pattern.
d. 6" Coping Cap Splice Plates to allow for expansion and contraction and to match the color of the coping cover.
e. Inside and Outside Pre-Fabricated Miter Corners must be riveted to allow for parapet walls that are not square.
L. Gutter, Brackets, Spacers, and Downspouts: 24-gauge pre-finished galvanized steel. Gutter dimension shall be size as indicated on drawings. Bracket shall be 1-inch wide galvanized steel wrapped with 22-gauge prefinished metal cover. Downspout straps and gutter spacers shall be 1-inch wide prefinished galvanized steel.

11. EXAMINATION
A. Verify that substrates are smooth and clean to extent needed for sheet metal work.
B. Do not start sheet metal work until conditions are satisfactory.

12. SHEET METAL INSTALLATION
A. General:
1. Surfaces to which Sheet metal will be applied shall be true, smooth, clean, dry and free from defects which might lead to distortion of metal work. Install all Sheet metal work in accordance with the roofing manufacturer's installation instructions and per ANSI/SPRI ES-1, and coordinate with work of other trades, particularly the roofing trade for proper sequence of flashing work.
2. Proper and adequate provisions shall be made in fabrication, installing, and fastening Sheet metal work for expansion and contraction of metal and other materials entering into the work so that pulling, splitting, opening of joints, warpage or other failure of the work shall be prevented.
3. All sheet metal work shall be furnished complete with supports, hangers, bracing, anchors, and other devises required for proper reinforcement and attachment.
4. All sheet metal flashing necessary to make building weathertight shall be provided, whether indicated or not.
B. Sheet metal Parapet Underlayment: Prime and fully adhere flexible flashing under all Sheet metal covering over wood nailers or blocking. Lap joints 3 inches and seal edges of membrane at all vertical terminations.
C. Stucco/EIFS Parapet Underlayment: Prime and fully adhere flexible flashing under all Sheet metal covering over wood nailers or blocking. Lap joints 3 inches and seal edges of membrane at all vertical terminations.
D. Seams: Finish seams neatly with lines trimmed true and sharp. Number of joints shall be as few as possible and consistent with commercial sizes of materials.
1. Flat seams, not less than ½" in width, shall be either single locked and sweated with solder, or double locked and malleted flat.
2. Loose locked seams shall be single locked.
3. Cross joints shall be loose locked and filled with elastomeric sealant.
4. All seams shall be installed to be watertight and weatherproof.
E. Cleats: When applied as an exposed covering, fasten sheet metal to wood nailers with 2" X 3" cleats of same kind and weight of metal, spaced not over 12" center to center along hems, with one end of cleat turned into hem and opposite end secured with two fasteners and turned back over fasteners.
F. Coping: Coping constructed in lengths not exceeding 10 feet. Joints between sections shall be tight and lay flat over splice plates. Coping shall be mechanically fastened with high domed gasketed fasteners at 12" o.c. over parapet underlayment. Bent, crimped, or warped sections are not permitted. Coping at corners shall be riveted.
G. Counter-flashings:
1. Counter-flashing constructed in lengths not exceeding 10 feet and installed in receiver so that flashing lays tightly against base flashing and overlaps base flashings a minimum of 4 inches.
2. Secure counterflashing at 6-inches on-center with self-tapping screws.
3. Lap adjacent sections of receivers and counterflashings a minimum of 4-inches. Apply an appropriate bead of sealant, Type A or B, in lap.
4. Secure new flashing to new receiver utilizing pop rivets or self-tapping screws spaced 6-inches on-center.
5. Install wind clips to termination bar spaced 24-inches on-center.
H. Penetration Pans:
1. Fully solder joints and connections.
2. Prime top and bottom of flanges.
3. Install with flanges set in uniform troweling of plastic roof cement on membrane base ply, secure and strip-in flanges.
4. Fill penetration pan to within 1-inch of top of pan with non-shrink grout. Fill remainder of pan with pourable sealer.
5. Install umbrella counterflashing or hood.
I. Roof Penetration Hoods and Umbrella Counterflashing:
1. Install watertight hood or umbrella counterflashing at sleeves and penetration locations, such as pipes and conduit penetrating roof, and at equipment supports and over penetration pans.
2. Round or Pipe Penetrations:
a. Set umbrella counterflashing in sealant, Type A; utilize Type B sealant at heat sensitive areas.
b. Fully solder connections and seams and install in accordance with project drawings.
c. Tighten draw bands.
d. Seal top of umbrella counterflashing with sealant, Type A; utilize Type B sealant at heat sensitive units.
3. Square Penetration:
a. Secure umbrella counterflashing to penetration with self-drilling screw.
b. Set umbrella counterflashing in sealant, Type B.
c. Seal top of umbrella counterflashing with sealant, Type B.
J. Pipe Box:
1. Fully solder joints and connections.
2. Prime top and bottom of flanges.
3. Install with flanges set in plastic roof cement on base ply, secure and strip-in.
4. Fill pans with grout or spray foam to a height of 3/4 of the total pan height.
5. Fill remaining height of pitch pans with pourable sealer.
6. Install hood over pan, securing to each side with self-tapping screws.
7. Install face plate to cover box opening around pipe penetrations.
K. Soldering: Remove foreign materials and surface oxides prior to soldering, and solder as soon as possible after cleaning with degreasing solvents. Type of flux shall be compatible with solder used.
L. Metal Edge:
1. Install in accordance with manufacturer's installation instructions.
2. Use provided fasteners consistent with manufacturer's instructions, suitable for the substrate to which it is being installed.
3. Wood nailer is required if 1" or greater of insulation is used and shall be attached to the wall in accordance with ANSI/SPRI ES-1 3.9.3. Install in accordance with EXCEPTIONAL METAL detail #3110.
4. Attach a continuous 24ga cleat or base to the wood nailer.
5. Fasten the membrane over the 24ga cleat and use the 24 ga cover to compress the membrane as in accordance with the manufacturer's installation detail.
M. Sanitary Vent Stacks:
1. Prime top and bottom flanges of lead flashing sleeve. Set flange in uniform troweling of plastic roof cement. Prime top side of flange to receive strip-in membrane.
2. Fold lead sleeve down inside pipe a minimum of 1-inch. Apply a continuous bead of sealant on inside of pipe prior to folding lead sleeve.
N. Gutter/Downspout:
1. Support gutter with brackets spaced 3 feet on-center. Secure bracket to nailer with two nails or screws.
2. Install gutter spacer spaced 3 feet on-center attached to front and back of gutter. Stagger spacer from location of brackets.
3. Lap joints in gutters 2-inches. Apply a continuous bead of sealant, Type B, between lap and install two rows of rivets spaced on 1-inch centers, staggered. Lap joints in direction of flow.
4. Install new downspouts plumb and level, attached to columns or wall with straps located at top and bottom of downspout and 10 feet on-center, maximum or at joint locations.
5. Install splash block under discharge port of downspouts. Install splash block over a protection pad for downspouts located at roof level.
6. Provide expansion joints on ends of gutters spaced at 50 feet on-center, maximum. Install snapped-on cover over expansion joint.
O. Scupper:
1. Apply factory applied mastic behind the metal flange.
2. Apply manufacturer's approved sealant to the inside of the scupper opening.
3. Attach the back side of the scupper and weld the skirt to the wall flashing.

13. FLEXIBLE FLASHING INSTALLATION
A. General: Install where shown on the drawings and at all locations normally considered good practice. Trim cut flashings clean with edges of trim, etc., to provide a finished installation where no flashing surfaces are visible. Prime all surfaces to receive flexible flashing.

SECTION 07900 - SEALANTS AND CAULKING

1. SECTION INCLUDES
A. Sealants and joint backing.

2. INTENT
A. Provide sealant required to close joints as shown on the drawings and as herein specified including but not limited to:
1. Sealing of interior perimeter joints of window framing, door frames, and other openings in walls.
2. Setting of thresholds in sealant.
3. Sealing of joints between countertops and wall surfaces for a sanitary joint.
4. Sealing of joints of every nature and description that would allow moisture or air penetration.
5. Sealing of joints indicated to be caulked or sealed whether specifically mentioned herein or not.
6. Sealing around all pipe, duct and vent penetrations.
7. Sealing of joints between dissimilar materials

3. QUALITY ASSURANCE
A. Manufacturer: Company specializing in manufacturing products specified in this Section with minimum five (5) years documented experience.
B. Applicator: Company specializing in applying work of this Section with minimum three years documented experience.
C. Product Labels: Include manufacturer's name, type of sealant, and color on labels of containers.
D. Single Source Responsibility for Joint Sealer Materials:
1. Obtain joint sealer materials from single manufacturer for each different product required.
2. Provide primers, joint sealers, joint fillers, and other related materials that are compatible with one another and with joint substrates under conditions of service and application, as demonstrated by testing and field experience as supplied and warranted by one manufacturer.
3. Provide joint sealers that have been produced and installed to establish and maintain watertight and airtight continuous seals.

4. WARRANTY
A. Manufacturer's Warranty:
1. Sealant: Provide manufacturer's standard five (5) year material warranty for type of sealant specified utilized in exterior joints and joints in walls and windows.
B. Contractor's Warranty: Provide written warranty against leakage and defects in workmanship for a period of two (2) years from date of Final Completion.

5. MANUFACTURER
A. The Drawings were prepared and this Specification written on the basis of using the products of Pecora Corporation, Harleysville, Pennsylvania. Such is intended to establish minimum quality standards, not to limit competitive bidding. Products with equal or superior characteristics by other manufacturers are acceptable under conditions of the Specifications.

6. MATERIALS
A. Exterior Sealant: Polyurethane Sealant:
1. Single component, non-sag, non-staining, non-bleeding.
2. Acceptable Products:
a. Dynatrol I, Pecora Corporation
b. Sonolastic NP1, Sonneborn Building Products
c. Sikaflex-1A, Sika Corporation
B. Interior Sealant: Compound used throughout job; either:
1. "BC-158" one-part butyl rubber sealant; FS TT-S-001657, Type 1.
2. "AC-20" one-part acrylic latex caulk; ASTM C834-76.
C. Interior Mildew-Resistant Silicone Sealant: (Restrooms, Kitchen, and Food Service Areas) One part mildew-resistant silicone sealant formulated with fungicide, intended for sealing joints with substrates subject to in-service exposure to conditions of high humidity and temperature extremes.
1. "SCS 1702 Sanitary" manufactured by General Electric Co.
2. "863" manufactured by Pecora Corp.
D. Fire-resistant Joint Sealant: (if required by building codes or authorities): One part fire-stopping sealant system formulated for use in through-penetration sealing of openings, cables, conduit, pipes, and penetrations through walls and floors.
1. "3M Fire Barrier Caulk CP-25" by Electrical Products Division, 3M Company.
2. "Dow Corning Fire-Stop" by Dow Corning Corporation.
E. Kitchen Exhaust Hoods to Stainless Steel Wall Panels (N.I.C.) and Exhaust Duct Funnels to Roof Mounted Curbs:
1. 3M "Fire Barrier" 2000
F. Primer: Non-staining type, recommended by sealant manufacturer, to suit application.
G. Joint Backing:
1. Closed cell non-gassing polyethylene foam rod, over-sized 30 to 50 percent for joint size, compatible with sealant, sized and shaped to provide proper compression upon insertion in accordance with manufacturer's recommendations.
2. Acceptable Products:
a. "Sonolastic Soft Backer-Rod" by Sonneborn
b. "SofRod" by Namaco
H. Bond Breaker: Pressure sensitive tape recommended by sealant manufacturer to suit application.
I. Masking Tape: FS UU-T-106.

7. COLORS
A. To be selected by Owner.

8. GENERAL
A. Do not use interior sealant for exterior conditions. Gun apply compound with nozzle of proper size to fit width of joint indicated; force sealant into joint with sufficient pressure to expel air and fill groove solidly.

9. CONDITIONS
A. Exterior: Apply sealants when temperature is between 40º and 100° F.
B. Interior: Do not install solvent curing sealants in enclosed building spaces. Maintain temperature and humidity recommended by sealant manufacturer during and after installation.

10. INSTALLATION
A. General: Conform to SWI requirements for installation and with manufacturer's instructions. Measure joint dimensions and size materials to achieve required width/depth ratios.
B. Joint Backing: Install to achieve depth dimension no greater than 1/2 joint width.
C. Bond Breaker: Install where joint backing is not used. Three-sided adhesion will not be permitted.
D. Masking Tape: Place on finish surface on one or both sides of joint to protect adjacent finish surfaces from compound smears. Remove within 10 minutes after joint has been filled and tooled.
E. Priming: Prime joint substrates where indicated or where recommended by sealant manufacturer. Apply primer to comply with joint sealer manufacturer's recommendations.

11. FINISHING
A. Tool joints slightly concave unless shown otherwise on the Drawings. When tooling white or light color sealant, use dry or water wet tool.

DIVISION 08 – DOORS AND WINDOWS

SECTION 08110 - STEEL DOORS AND FRAMES

1. SECTION INCLUDES
A. Steel doors and frames.
B. Steel frames for wood doors.
C. Thermally insulated steel doors.

2. REFERENCES
A. ANSI/ICC A117.1 - American National Standard for Accessible and Usable Buildings and Facilities; International Code Council; 2003.
B. ANSI A250.3 - Test Procedure and Acceptance Criteria for Factory-Applied Finish Painted Steel Surfaces for Steel Doors and Frames; 1999.
C. ANSI A250.8 - SDI-100 Recommended Specifications for Standard Steel Doors and Frames; 2003.
D. ASTM A 653/A 653M - Standard Specification for Steel Sheet, Zinc-Coated (Galvanized) or Zinc-Iron Alloy-Coated (Galvannealed) by the Hot-Dip Process; 2005a.
E. DHI A115 Series - Specifications for Steel Doors and Frame Preparation for Hardware; Door and Hardware Institute; 2000 (ANSI/DHI A115 Series).

3. SUBMITTALS
A. Shop Drawings: Details of each opening, showing elevations, glazing, frame profiles, and identifying location of different finishes, if any.

4. MANUFACTURERS
A. Steel Doors and Frames:
1. Curries, and Asa Abloy company: www.curries.com.
2. Steelcraft: www.steelcraft.com.

5. DOORS AND FRAMES
A. Requirements for All Doors and Frames:
1. Accessibility: Comply with ANSI/ICC A117.1.
2. Door Top Closures: Flush with top of faces and edges.
3. Door Edge Profile: Beveled on both edges.
4. Door Texture: Smooth faces.
5. Glazed Lights: Non-removable stops on non-secure side; sizes and configurations as indicated on drawings.
6. Hardware Preparation: In accordance with DHI A115 Series, with reinforcement welded in place, in addition to other requirements specified in door grade standard.
7. Finish: Factory primed, for field finishing.

6. STEEL DOORS
A. Exterior Doors:
1. Grade: ANSI A250.8 Level 3, physical performance Level A, Model 2, seamless.
2. Core: Polystyrene foam.
3. Galvanizing: All components hot-dipped zinc-iron alloy-coated (galvannealed) in accordance with ASTM A 653/A 653M, with manufacturer's standard coating thickness.
4. High Frequency Hinge Preparation: Prep door with 8 gauge door panel reinforcement plate with 10 gauge auxiliary reinforcement. High frequency hinge preparation at all exterior doors is required.
B. Interior Doors, Non-Fire-Rated:
1. Grade: ANSI A250.8 Level 2, physical performance Level B, Model 1, full flush.
2. Thickness: 1-3/4 inches.

7. STEEL FRAMES
A. General:
1. Comply with the requirements of grade specified for corresponding door.
a. Frames for Wood Doors: Comply with frame requirements specified in ANSI A250.8 for Level 1, 16 gage
2. Finish: Same as for door.
B. Exterior and Interior Door Frames: Fully welded.
C. Anchors and Hardware Reinforcing: Comply with applicable requirements in ANSI A250.6 and ANSI/DHI A115 series specifications. Locate hardware per ANSI A250.8 unless otherwise indicated on drawings, UL anchors as required.
D. Silencers: Resilient Rubber
E. High Frequency Hinge Preparation: Steelcraft No 136, high frequency hinge preparation for door frames, shop fabricated with frame to consist of 10 gauge steel auxiliary hinge reinforcement internal to frame.

8. FINISH MATERIALS
A. Primer: Rust-inhibiting, door manufacturer's standard.

9. INSTALLATION
A. Install in accordance with the requirements of the specified door grade standard and NAAMM HMMA 840.
B. Coordinate frame anchor placement with wall construction.
C. Coordinate installation of hardware.

SECTION 08161 - FIBERGLASS DOORS

1. SECTION INCLUDES
A. Exterior Fiberglass doors
B. Hardware preparation

2. QUALITY ASSURANCE
A. Conform to requirements of SDI-117-00.

3. REFERENCE STANDARDS
A. Window and door Manufacturer's Association (WDMA)
B. American Society for Testing Materials (ASTM)
C. Door Hardware Institute (DHI)
D. American National Standards Institute (ANSI)

4. SUBMITTALS
A. Submit Shop Drawings per Section 01300 "Submittals"; Base on details shown on the Drawings. Show elevations of each door type, door construction details and methods of assembling sections, hardware locations, reinforcement, opening sizes, dimensions, and shapes of materials, and finish requirements. Use SDI-111D, "Recommended Door, Frame and Hardware Schedule for Standard Steel Doors and Frames," and SDI-106, "Recommended Standard Door Type Nomenclature" as guide in development. Include manufacturer's installation instructions, if other than standard procedure. Detail to serve as installation drawings. Owner's acceptance is required prior to start of fabrication and/or shipment.
B. Manufacturer shall furnish a certificate to the Owner evidencing that materials delivered meet the labeled and/or fire resistive construction requirements.

5. DOOR TYPES
A. Extra Heavy-Duty Doors (Exterior Use): fiberglass equivalent of ANSI A250.8 Level 3, Performance Level A, Model 2, seamless composite construction.

6. DOOR MATERIALS
A. Face Sheets: Fiberglass-reinforced thermoset composite compound, made smooth for painted surface.

ARCHITECT:
DAVID SCOTT WINDLE, AIA
6201 CAMPUS CIRCLE DRIVE E.
IRVING, TEXAS 75038
TEL: 972.870.1288
WWW.IDSTUDIO4.COM
E-MAIL scottw@idstudio4.com

CORPORATE:
BRINKER RESTAURANT CORPORATION, A VIRGINIA CORPORATION
3000 OLYMPUS BLVD.
DALLAS, TEXAS 75019
972.980.9917
www.brinker.com

09/23/2024
ISSUE FOR BID
THESE DOCUMENTS ARE FOR BIDDING PURPOSES ONLY. DO NOT USE FOR CONSTRUCTION.

RESTAURANT #CH1679
PROTOTYPE 18.5FS

CHILI'S TOOELE
951 N MAIN STREET
TOOELE, UT 84074

CLIENT: BRINKER RESTAURANT CORP. A VIRGINIA CORPORATION

DATE	DESCRIPTION
6/27/2024	ISSUE FOR PERMIT
9/23/2024	ISSUE FOR BID

⚠	DATE	DESCRIPTION

PROJECT NUMBER:
CHI24007

SHEET TITLE:
SPECIFICATIONS
07530 - 08161

SHEET NUMBER:
SP107

B. Cores:
1. Flush Impact Rated Doors: Metal plate to reinforce, stiffen and to provide impact resistance to Foamed-in-place, CFC-free polyurethane with a minimum density of 2.0 pcf and U- value of 0.14 BTU / ft2 x F x hr.
2. Hardware Reinforcing Gauges: Minimum recommended by ANSI/DHI A115 Series.

7. PRIME PAINTING
A. Thoroughly clean, phosphate treat and prime surfaces with rust inhibiting primer; either air dried or baked on; ANSI A250.10-1998.

8. FABRICATION
A. Fabricate with hardware reinforcement plates in place.

9. STORAGE
A. Store doors at building site under cover. Place units on at least 4 inch wood sills or on floors in manner that will prevent damage. Do not use non-vented plastic or canvas shelters. Remove wet cartons immediately. Provide 1/4 inch space between doors to promote air circulation.

10. INSTALLATION
A. Install frames in accordance with SDI 105-98, DHI handbook and manufacturers' written instructions.
B. Install doors in accordance with DHI handbook and manufacturers' written instructions.
C. Fire rated doors: Comply with clearances indicated in NFPA 80.

SECTION 08211 - FLUSH WOOD DOORS

1. SECTION INCLUDES
A. Flush wood doors; flush configuration; non-rated and acoustical.

2. REFERENCES
A. AWI/AWMAC (QSI) - Architectural Woodwork Quality Standards Illustrated; Architectural Woodwork Institute and Architectural Woodwork Manufacturers Association of Canada; 2006, 8th Ed., Version 2.0.

3. DELIVERY, STORAGE, AND HANDLING
A. Package, deliver and store doors in accordance with specified quality standard.
B. Accept doors on site in manufacturer's packaging. Inspect for damage.
C. Protect doors with resilient packaging. Do not store in damp or wet areas; or in areas where sunlight might bleach veneer. Seal top and bottom edges with tinted sealer if stored more than one week. Break seal on site to permit ventilation.

4. WARRANTY
A. Interior Doors: Provide manufacturer's warranty for the life of the installation.
B. Include coverage for delamination of veneer, warping beyond specified installation tolerances, defective materials, and telegraphing core construction.

5. MANUFACTURERS
A. Wood Veneer Faced Doors:
1. Assa Abloy Graham: www.grahamdoors.com.
2. Eggers Industries: www.eggersindustries.com.

6. DOORS AND PANELS
A. All Doors: See drawings for locations and additional requirements.
1. Quality Level: Premium Grade, in accordance with AWI/AWMAC Architectural Woodwork Quality Standards Illustrated, Section 1300.
2. Wood Veneer Faced Doors: Species Noted on Drawings, plain-sliced., 5-ply unless otherwise indicated.
B. Interior Doors: 1-3/4 inches thick unless otherwise indicated; flush construction.
1. Provide solid core doors at all locations.

7. DOOR FACINGS
A. Wood Veneer Facing for Transparent Finish: Species as specified above, veneer grade as specified by quality standard, plain sliced, book veneer match, running assembly match; unless otherwise indicated.
1. Vertical Edges: Any option allowed by quality standard for grade.

8. DOOR CONSTRUCTION
A. Fabricate doors in accordance with door quality standard specified.
B. Fit door edge trim to edge of stiles after applying veneer facing.
C. Factory machine doors for hardware other than surface-mounted hardware, in accordance with hardware requirements and dimensions.
D. Factory fit doors for frame opening dimensions identified on shop drawings, with edge clearances in accordance with specified quality standard.
1. Exception: Doors to be field finished.
E. Provide edge clearances in accordance with AWI Quality Standards Illustrated Section 1700.

9. INSTALLATION
A. Install doors in accordance with manufacturer's instructions and specified quality standard.
B. Use machine tools to cut or drill for hardware.
C. Coordinate installation of doors with installation of frames, hardware and glazing.

10. INSTALLATION TOLERANCES
A. Conform to specified quality standard for fit and clearance tolerances.
B. Conform to specified quality standard for maximum diagonal distortion.

SECTION 08410 - ALUMINUM ENTRANCES AND STOREFRONTS

1. SECTION INCLUDES
A. Framing system
B. Doors and hardware
C. Anchors, brackets and attachments
D. Protection and cleaning

2. ENGINEERING DESIGN
A. Structural Properties: Fabricate and install work of this Section to withstand wind loads required by governing laws, ordinances, regulations and codes and with a maximum deflection of L/175.
B. Thermal Movement: Fabricate and install systems to provide for expansion and/or contraction of component materials as will be caused by temperature range of 150 degrees F without causing harmful buckling, opening of joints, undue stresses on fasteners, or other detrimental effects.
C. Water Leakage: Fabricate and install systems to deny water leakage; defined as appearance of water, other than condensation, on room side face of any part of systems.
D. Air Infiltration: Limit air infiltration through assembly to 0.06 cu ft/min/sq ft of assembly surface area, measured at a reference differential pressure across assembly of .03 inches water gauge; measured in accord with ANSI/ASTM E283.
E. Movement: System to accommodate, without damage to system or components, or deterioration of perimeter seal: Movement within system; movement between system and perimeter framing components; dynamic loading and release of loads; and deflection of structural support framing.

3. SUBMITTALS
A. General: Submit shop drawings of system proposed. Owner's acceptance is required prior to start of fabrication and/or shipment.
B. Shop Drawings: Base on details shown on the Drawings. Show system and component dimensions; components within assembly; framed opening requirements, concealed steel reinforcing and tolerances; anchorage and fasteners; glass and infills; door hardware requirements; and affected related work. Include manufacturer's installation instruction. The shop drawings are to serve as installation drawings.

4. MANUFACTURER
A. The Drawings were prepared and this Specification written on the basis of using the products of Kawneer Company, Inc., Norcross, Georgia.It is not the intent to limit competitive bidding. Products of equal characteristics by other manufacturers are acceptable under the conditions of these specifications. Kawneer contact: Cheryl Wilkerson, (317)-771-9263, Cheryl.wilkerson@arconic.com.

5. STOREFRONT FRAMING
A. System: Trifab 450 (4 1/2 -inch) for single glazed decorative glass and multi-layer laminated clear glazing for interior applications, and Trifab 451 (4 1/2 -inch) for insulating glass, both screw spline assembled, glass application: center of mullion, flush glazed, extruded aluminum having properties of 6063-T5 alloy.
B. Interior Reinforcing: If required by Engineering design; rolled steel, 16 gauge or heavier if required.
C. Fasteners: Manufacturer's standard; either stainless steel or carbon steel plated against electrolytic action. All fasteners to be concealed.
D. Finish: Anodized Finish conforming to AA-M12C22A31 and AAMA 607.1 as noted on drawings.

6. DOORS AND HARDWARE
A. Doors: Kawneer "Series as indicated on Drawings - Panic Guard", extruded aluminum having properties of 6063-T5 alloy.
B. Fasteners: Manufacturer's standard; either stainless steel or carbon steel plated against electrolytic action.
C. Hardware: Refer to hardware schedule.
D. Weatherstripping and Sill Sweeps: Manufacturer's standard type to suit application.

7. FABRICATION
A. Storefront Framing: Fabricate and assemble in shop to greatest extent possible. Cut carefully and accurately. Use compression joints between vertical and horizontal mullions, with gasket of non-hardening butyl compound. Install pre-formed break- metal sill flashings: Provide pan-formed sill flashing member with preformed "end dams" at all window installations. Pre-formed water-tight three-sided pan that the window unit will sit into and catch water from window and discharge the water to the outside. The fourth side of sill pan will extend out beyond the framing system, overlapping and conforming to the sill. Provide a rolled exposed edge. Pan will be set in a full bed of mastic and seal perimeter rolled edge. Seal to adjacent work to form water tight dam in accordance with manufacturer's recommendation, between vertical and horizontal members and seal with liquid butyl compound. Installation to be leak proof. Provide vision and spandrel areas with drainage to outdoors in horizontal member. Sizes of components and necessary field connections and fastenings required for installation; permit easy assembly by means of standard construction equipment and tools without use of special apparatus or appliances.
B. Doors: Fabricate doors with tight, hairline joints where rails are fitted against stiles, and fasten by means of tensioned steel tie-rods in top and bottom rails. Provide adjusting mechanism in top rail to provide for minor clearance adjustments. Glass stops; snap-in type with bulb type glazing strips. Weatherstripping; pile. Provide adjustable pile weatherstrip on one stile at meeting stiles of pairs of doors.

8. PREPARATION
A. Where aluminum surfaces contact steel, other incompatible metals, or concrete, protect aluminum by one of the following:
1. Paint incompatible metal or concrete with coating of heavy-bodied bituminous paint.
2. Paint incompatible metal with prime coat of zinc chromate primer followed by two coats of aluminum metal paint or other suitable protective coating; exclude those containing lead pigmentation.
3. Non-absorptive gaskets.
4. Caulking between aluminum and incompatible metals.
5. If drainage from incompatible metal passes over aluminum, paint incompatible metal by method No. 2 above.

9. INSTALLATION
A. General: Install true to line, plumb, level, square, and in proper planes with other work. Install free from sags, waves, buckles, or other objectionable defects. Anchor to resist stresses to which the work shall normally be subjected.
B. Hardware: Fit in accord with manufacturer's instructions. Install doors to operate smoothly and quietly after adjustment. Adjust door-closing devices immediately prior to final inspection. Install thresholds in two full beads of sealant compound (one along each edge) and fasten with color matching machine screws and expansion shields. One anchor will be required for each 24 inches of threshold length.
C. Glass and Glazing: Specified in other Sections.

10. CLEANING
A. Remove protective material from prefinished aluminum surfaces. Wash down exposed surfaces using solution of mild detergent in warm water, applied with soft, clean wiping cloths. Take care to remove dirt from corners. Wipe surfaces clean. Remove excess sealant by moderate use of mineral spirits or other solvent acceptable to both sealant and systems manufacturers. Contractor is responsible for damages resulting from the use of cleaning materials not approved by system manufacturer.

SECTION 08710 – DOOR HARDWARE

1. SECTION INCLUDES
A. Hardware shown on the Hardware Schedule on the Drawings.

2. QUALITY ASSURANCE
A. All exterior locksets, latch sets and deadbolts shall be mortise style conforming to ANSI 156-13, Series 1000, Grade 2.
B. All interior locksets and latch sets shall be cylindrical type conforming to ANSI 156-2, Series 4000, Grade 1.

3. MANUFACTURER
A. The Drawings were prepared, and this specification written on the basis of using the products of specific manufacturers as listed in Hardware Schedule. Products with equal characteristics by other manufacturers are acceptable under the conditions of these Specifications.

4. REGULATORY AGENCY REQUIREMENTS
A. Conform to applicable codes for requirements applicable to fire rated doors and frames.
B. All hardware items shall comply with ANSI specifications and the Americans with Disabilities Act.

5. REFERENCE STANDARDS
A. American National Standards Institute (ANSI)
B. National Fire Protection Association (NFPA)
C. Door Hardware Institute (DHI)
D. Americans with Disabilities Act (ADA)

6. SUBMITTALS
A. Product Data:
1. Provide product data on hardware.
2. Submit product data indicating conformance with ADA specifications.
B. Operation and Maintenance Data: Include data on operating hardware, lubrication requirements, and inspection procedures related to preventative maintenance. Data shall be submitted as part of contract closeout.

7. MAINTENANCE MATERIALS
A. Provide special wrenches and tools applicable to each different or special hardware component along with maintenance tools and accessories supplied by hardware component manufacturer. Materials shall be submitted to Owner at turnover.

8. COORDINATION OF WORK
A. After acceptance of the FINAL HARDWARE SCHEDULE by Owner, hardware supplier will furnish Contractor with copies of schedule.

9. MATERIALS
A. Complete Sets: As scheduled in the Hardware Schedule on the Drawings. All doors required to be rated shall be installed with UL rated hardware UL label.
B. Other Items that are not in the Hardware Schedule: Quality standards equal or superior to product of other manufacturers in the Hardware Schedule.
C. Finishes: As scheduled in the Hardware Schedule on the Drawings.

10. KEYING
A. As shown on the Hardware Schedule on the Drawings.
B. Use small format interchangeable cores.

11. PACKAGING
A. Package items separately; complete with trim, screws, bolts, nuts, washers, etc. Label and identify package with door opening number and corresponding hardware set number to match Door Schedule on the Drawings.

12. DELIVERY AND STORAGE
A. General: Protect hardware from theft by cataloging and storing in secure area.
B. Keys: Deliver keys to Owner at turnover.

13. INSPECTION
A. Verify that doors and frames are ready to receive work and dimensions are as indicated on shop drawings. Verify that power supply is available to power operated devices (if shown on the Drawings). Beginning of installation means acceptance of existing conditions.

14. INSTALLATION
A. General: Install hardware in accord with manufacturer's instructions and requirements of ANSI/NFPA 80 and A115 series. Use templates provided by hardware item manufacturer. Conform to ANSI A117.1 and ADA for positioning requirements for the handicapped.

SECTION 08800 – GLASS AND GLAZING

1. SECTION INCLUDES
A. Glass
B. Glazing Compounds and Accessories
C. Window Film

2. REFERENCES
A. 16 CFR 1201 - Safety Standard for Architectural Glazing Materials; current edition.
B. ASTM C 864 - Standard Specification for Dense Elastomeric Compression Seal Gaskets, Setting Blocks, and Spacers; 2005.
C. ASTM C 920 - Standard Specification for Elastomeric Joint Sealants; 2005.
D. ASTM C 1036 - Standard Specification for Flat Glass; 2001.
E. ASTM C 1048 - Standard Specification for Heat-Treated Flat Glass--Kind HS, Kind FT Coated and Uncoated Glass; 2004.
F. ASTM C 1193 - Standard Guide for Use of Joint Sealants; 2005a.
G. ASTM E 2190 - Standard Specification for Insulating Glass Unit Performance and Evaluation; 2002

3. INTENT
A. It shall be the responsibility of the glazing subcontractor to comply with all safety laws, ordinances and regulations, etc. which control type of glass related to safety of persons. The drawings and specifications attempt to comply with all such laws, etc., but in case of failure to comply, the most restrictive requirement shall govern the work of this section.
B. Design Criteria: Glass shall conform to Fed. Spec. DD-G-001 403 and tested to pass IGCC, CBA, ASTM E-774-83.

4. SUBMITTALS
A. See Section 01300 - Administrative Requirements, for submittal procedures.
B. Product Data on Glass Types: Provide structural, physical, and environmental characteristics, size limitations, special handling or installation requirements.
C. Product Data on Glazing Compounds: Provide chemical, functional, and environmental characteristics, limitations, special application requirements. Identify available colors.
D. Certificates: Certify that products meet or exceed specified requirements.

5. MANUFACTURER
A. The drawings were prepared, and this specification written on the basis of using the products of Vitro Architectural Glass, Cheswick, Pennsylvania unless noted otherwise. It is not the intent to limit competitive bidding. Products with equal characteristics by other manufacturers are acceptable under the conditions of these specifications. Window schedule nomenclature should be consistent with specs.

6. MATERIALS
A. General: Glass sizes shown are approximate. Sizes and proper edge clearances shall be determined by measuring the actual opening to receive glass. Labels shall not be removed until final approval is obtained. Types of glass as called out on window and door schedules on drawings.
B. Float Glass: 1/4-inch thick, clear float (plate) glass.
C. Heat Strengthened Glass: 3/16 -inch thick, multi-layer laminated glass units.
D. Tempered Glass: 1/4-inch thick, clear "Herculite" tempered safety glass.
E. Insulating Glass Unit at Exterior: Solarban 90 (2) Clear + Clear; 1/4-inch clear tempered glass at outer-layer with "Solarban 90" Low - E coating on 2nd (or interior) face, 1/2-inch air space, and 1/4-inch clear tempered glass at inner-layer. Provide (VLT) 51% and maximum (SHGC) 0.23. Total Thickness: 1-inch insulated glass unit.
F. Insulating Glass at Exterior Sidelites and Exterior Doors: Solarban 90 (2) Clear + Clear multi-layer laminated glass unit; 1/4-inch clear tempered glass outer-layer with "Solarban 90" Low - E coating on 2nd (or interior) face, 3/8-inch air space, and 3/16-inch (each) layer, of clear heat strengthened glass, heat laminated by sandwiching clear (PVB) polyvinyl butyryl (0.090 -inch minimum) thickness between the two inner-layers. Provide (VLT) 51% and maximum (SHGC) 0.23. Total Thickness: 1.09 -inch insulated and laminated glass unit.
G. Insulating Glass at Interior Vestibule Doors and Sidelites: Multi-layer 1/4-inch clear tempered glass, heat laminated by sandwiching a clear (PVB) polyvinyl butyryl (0.090 - inch minimum) between the sheets of glass. Vestibule glazing which is not located in exterior walls. Total Thickness: 0.59 -inch laminated glass unit.
H. Mirror Glass: 1/4-inch thick quality polished plate glass, hermetically sealed with a uniform coating of electrolytic copper plating; FS #DDM-411.
I. Laminated Safety Glass: Two layers 3/8-inch thick (each) green float glass, heat laminated by sandwiching a clear (PVB) polyvinyl butyryl (0.090 -inch minimum) between sheets of glass. Laminated safety glass to be provided at Receiving Area door to Kitchen and/or Security Room door.
J. Decorative Glass at Interior POS Stations (GL-1): 3/8 -inch (10mm) thick decorative tempered glass (smooth side facing customer seating areas and POS side) provided in a 4 1/2 -inch interior frame depth with center position. Manufacturer, color and pattern as noted on Finish Schedule.
K. One Way Vision Film: CP Films "Llumar" R-15, or Solarguard "grey-silver". Film to be installed per manufacturer's instructions on outside of office door glass and the security room door glass. Seal film around edges with white acrylic sealant.
L. Window Security Film: Llumar R-20 SR PS4 & 8 (silver)
M. Window Tint: 3m Prestige Series Pro40. Film to be installed per manufacturer's instructions on inside west and/or south exposed windows in vestibule, as noted in drawings.

7. GLAZING COMPOUNDS
A. Butyl Sealant: Single component; ASTM C 920, Grade NS, Class 12-1/2, Uses M and A; Shore A hardness of 10 to 20; black color; non-skinning.
B. Silicone Sealant: Single component; neutral curing; capable of water immersion without loss of properties; non-bleeding, non-staining; ASTM C 920, Type S, Grade NS, Class 25, Uses M, A, and G; cured Shore A hardness of 15 to 25; color as selected.

8. GLAZING ACCESSORIES
A. Setting Blocks: Neoprene, 80 to 90 Shore A durometer hardness, ASTM C 864 Option I. Length of 0.1 inch for each square foot of glazing or minimum 4-inch x width of glazing rabbet space minus 1/16 inch x height to suit glazing method and pane weight and area.
B. Spacer Shims: Neoprene, 50 to 60 Shore A durometer hardness, ASTM C 864 Option I. Minimum 3-inch-long x one half the height of the glazing stop x thickness to suit application, self-adhesive on one face.
C. Glazing Tape: Preformed butyl compound with integral resilient tube spacing device; 10 to 15 Shore A durometer hardness; coiled on release paper; size as recommended by glass manufacturer; black color.
a. Pecora Corporation: www.pecora.com.
b. Tremco, Inc: www.tremcosealants.com.
c. Substitutions: Refer to Section 01600 - Product Requirements.
D. Glazing Gaskets: Resilient silicone extruded shape to suit glazing channel retaining slot; ASTM C 864 Option I; black color.
E. Glazing Clips: Manufacturer's standard type.

9. PREPARATION
A. Prime surfaces scheduled to receive sealant.
B. Install sealants in accordance with ASTM C 1193 and FGMA Sealant Manual.
C. Install sealant in accordance with manufacturer's instructions.

10. INSTALLATION - EXTERIOR WET/DRY METHOD (PREFORMED TAPE AND SEALANT)
A. Cut glazing tape to length and set against permanent stops, 3/16 inch below sight line. Seal corners by butting tape and dabbing with butyl sealant.
B. Apply heel bead of butyl sealant along intersection of permanent stop with frame ensuring full perimeter seal between glass and frame to complete the continuity of the air and vapor seal.
C. Place setting blocks at 1/4 points with edge block no more than 6 inches from corners.
D. Rest glazing on setting blocks and push against tape and heel bead of sealant with sufficient pressure to attain full contact at perimeter of pane or glass unit.
E. Install removable stops, with spacer strips inserted between glazing and applied stops, 1/4 inch below sight line. Place glazing tape on glazing pane or unit with tape flush with sight line.
F. Fill gap between glazing and stop with sealant to depth equal to bite of frame on glazing, but not more than 3/8 inch below sight line.
G. Apply cap bead of sealant along void between the stop and the glazing, to uniform line, flush with sight line. Tool or wipe sealant surface smooth.

11. INSTALLATION - INTERIOR DRY METHOD (TAPE AND TAPE)
A. Cut glazing tape to length and set against permanent stops, projecting 1/16 inch above sight line.
B. Place setting blocks at 1/4 points with edge block no more than 6 inches from corners.
C. Rest glazing on setting blocks and push against tape for full contact at perimeter of pane or unit.
D. Place glazing tape on free perimeter of glazing in same manner described above.
E. Install removable stop without displacement of tape. Exert pressure on tape for full continuous contact.
F. Knife trim protruding tape.

12. INSTALLATION - WALL MIRRORS
A. Install mirrors into Owner provided bamboo frames.
B. Install spots of adhesive, 4 spots per square foot, approximately 1/8 inch to 3/16 inch thick and 4 inches to 4 1/2 inches in diameter.
C. Provide bottom support for mirrors for 3 days until adhesive has set.
D. Install bedding tape or cushion strip under bottom edge of each mirror.
E. Tolerances:
1. Offset in alignment of adjoining edges: Max 1/16 inch.
2. Offset in face alignment over wall surface: Max 1/8 inch.
3. No gap between adjacent members.

13. CLEANING
A. Remove glazing materials from finish surfaces.
B. Remove labels after Work is complete.
C. Clean glass and adjacent surfaces.

14. PROTECTION OF MATERIALS
A. Protect glass from damage of any kind, during packaging, transporting and storage. Do not move partially unpacked cases of glass, as this is apt to cause glass damage or breakage. Ship glass with protective plastic coating to prevent scratching.

SECTION 09220 – PORTLAND CEMENT PLASTER (STUCCO)

1. SECTION INCLUDES
A. Supply and installation of reinforced, three-coat stucco system

2. REFERENCES
A. ASTM C847 - Standard Specification for Metal Lath
B. ASTM C897 - Standard Specification for Aggregate for Job-Mixed Portland Cement-Based Plaster
C. ASTM C926 - Standard Specification for Application of Portland Cement-Based Plaster
D. ASTM C1063 - Standard Specification for Installation of Lathing and Furring for Portland Cement Based Plaster
E. ASTM E84 - Test Method for Surface Burning Characteristics of Building Materials
F. ICC AC 219 - Acceptance Criteria for Exterior Insulation and Finish Systems

3. SYSTEM DESCRIPTION
A. Three-coat Stucco System: water resistive barrier sheet, metal lath, fiber reinforced scratch and brown coat (3/4 in) and an acrylic based finish coat.
B. Expansion and Control Joints: Continuous expansion and control joints shall be installed at locations in accordance with ASTM C1063 and ASTM C926.
1. Substrate movement, and expansion and contraction of stucco and adjacent materials shall be considered in design of expansion joints, with proper consideration given to sealant properties, installation conditions, temperature range, coefficients of expansion of materials, joint width to depth ratios, and other material factors. Minimum width of expansion joints shall be as shown on the project drawings.
2. In accordance with ASTM C1063, expansion or control joints shall be installed in walls not more than 144 ft^2 in area, and not more than 100 ft^2 in area for all non-vertical applications. The distance between joints shall not exceed 18 ft in either direction or a length-to-width ratio of 2-½ to 1.

4. SUBMITTALS
A. General: Submit Samples, Evaluation Reports, and manufacturer's product data sheets in accordance with Division 1 General Requirements Submittal Section.
B. Samples: Submit samples for approval. Samples shall be of materials specified and of suitable size as required to accurately represent each color and texture used on project. Prepare each sample using same tools and techniques for actual project application. Maintain and make available, at job site, approved samples.
C. Manufacturer's Warranty: Submit sample copies of Manufacturer's Warranty indicating Single Source Responsibility for stucco system materials.

5. QUALITY ASSURANCE
A. Qualifications:
1. Applicator: Shall be experienced and competent in installation of stucco materials and shall provide evidence of a minimum of five years' experience in work similar to that required by this section.

6. DELIVERY, STORAGE, AND HANDLING
A. Delivery: Deliver stucco system materials in original packaging with manufacturer's identification.
B. Storage: Store stucco system materials in a dry location, out of direct sunlight, off the ground, and protected from moisture.

7. SITE / ENVIRONMENTAL CONDITIONS
A. Substrate Temperature: Do not apply stucco system materials to substrates whose temperature are below 40°F (4°C) or contain frost or ice.
B. Inclement Weather: Do not apply stucco system materials during inclement weather unless appropriate protection is employed.
C. Sunlight Exposure: Avoid installation of the stucco system materials in direct sunlight. Application of finishes in direct sunlight in hot weather may adversely affect aesthetics.
D. Protect stucco materials from uneven and excessive evaporation during dry weather and strong blasts of dry air.

8. WARRANTY
A. Warranty: Provide manufacturer's Standard Limited Warranty.

9. MANUFACTURERS
A. Manufacturer, Basis of Design: Parex USA, Inc., 4125 E. La Palma Ave., Suite 250, Anaheim, CA 92807 Contact: Architectural Sales (866.516.0061) or Technical Support (800.226.2424).

10. MATERIALS
A. Stucco Base
1. Parex Fiber-47 Armourwall Scratch & Brown Concentrate: Proprietary mixture of portland cement and proprietary ingredients mixed with clean, cool, potable water, and ASTM C897 or ASTM C144 sand added in the field.
B. Primer:
1. Parex USA Primer: 100% acrylic based primer to prepare surfaces for acrylic or elastomeric finishes.
C. Finish and Coatings:
1. Parex DPR Standard Finish: Factory blended, 100% acrylic polymer-based finish, integrally colored. Finish type, texture and color as noted on Finish Schedule in the drawings.
D. Water: Clean, cool, potable water.

11. RELATED MATERIALS AND ACCESSORIES
A. General: Stucco system materials and related materials shall conform to ASTM C926, this specification and Parex Product Data Sheets.
B. Substrate Materials:
1. Zip Sheathing: As specified in Section 06160.
C. Water-Resistive Barriers:
1. Paper backed metal lath.
2. Other recognized equivalent.
D. Lath and Accessories: Conform to ASTM C847, ASTM C933, ASTM C1032, ASTM C1063 and Appendix.
1. Accessories: Manufacturer's standard steel products with minimum G60 galvanizing in compliance with ASTM C 847..
2. Metal Plaster Bases: 3.4 lb/yd2 paper backed, expanded metal diamond lath in accordance with applicable codes and standards.
3. Weep Screeds: Foundation weep screed with minimum 3-1/2-inch vertical attachment flange.
E. Seals, Sealants and Bond Breakers: Sealants shall conform to ASTM C 920, Grade NS, Class 25, Use NT. Backer rod shall be closed-cell polyethylene foam.

12. EXAMINATION
A. Compliance: Comply with manufacturer's instructions for installation of stucco system materials.
B. Substrate Examination: Examine prior to stucco base installation as follows:
1. Substrate construction in accordance with substrate material manufacturer's specifications and applicable building codes.

13. PREPARATION
A. Paper Backed Metal Lath: Install according to ASTM C1063 and Appendix and the Building Code. Installed according to manufacturer's instructions.
B. Ensure that all metal flashings have been installed per Specification Section 07620 – Sheet Metal Flashing and Trim.

14. MIXING
A. Mix proprietary products in accordance with manufacturer's instructions, including the applicable stucco system product data sheets and application guidelines.

15. APPLICATION
A. General: Stucco system and its related materials shall conform to the requirements of ASTM C926. Follow Parex USA's current Stucco Application Guide.
B. Stucco Base:
1. Scratch Coat:
a. Apply scratch coat to a minimum thickness of 3/8 in (9.5 mm), using sufficient trowel pressure to key stucco into lath.
b. Prior to initial set, scratch horizontally to provide key for bond of brown coat.
c. Moist cure scratch coat with clean potable water for at least 48 hours in accordance with ASTM C926 and the building codes following initial application.
2. Brown Coat:
a. Apply brown coat to a minimum thickness of 3/8 in, using sufficient trowel pressure to key stucco into scratch coat.
b. Rod surface to true plane and float to densify.
c. Trowel to smooth and uniform surface to receive acrylic polymer finish coat.
d. Moist cure brown coat with clean potable water for at least 48 hours, in accordance with ASTM C926 and the building codes.
3. The acrylic primers and finishes can be applied as soon as the stucco leveling coat has dried, typically, 24 hours
C. Primer and Finish:
1. Remove surface contaminants such as dust or dirt without damaging the substrate.
2. Ambient and surface temperature must be 40°F (4°C) or higher during application and drying time. Supplemental heat and protection from precipitation must be provided as needed.
3. Use only on surfaces that are sound, clean, dry, unpainted, and free from any residue that might affect the ability of the finish to bond to the surface.
4. Apply primer as directed in manufacturer's product data sheet and application guide.
5. Apply exterior wall finish in number of coats thickness recommended by manufacturer to achieve texture indicated, using sufficient trowel pressure or spray velocity to bond finish to base coat.
6. Protect finish coats from inclement weather until completely dry.
D. Curing:
1. Keep stucco base coat moist for at least 48 hours (longer in dry weather) by lightly fogging walls. Start light fogging after initial set of 1-2 hours.
2. Air dry acrylic based and elastomeric finish coats only, do not wet cure.

16. PROTECTION
A. Provide protection of installed materials from water infiltration into or behind them.
B. Provide protection of installed finish from dust, dirt, precipitation, freezing, and continuous high humidity until fully dry.
C. Clean exposed surfaces using materials and methods recommended by the manufacturer of the material or product being cleaned. Remove and replace work that cannot be cleaned to the satisfaction of the Owner.

SECTION 09260 - GYPSUM BOARD ASSEMBLIES

1. SECTION INCLUDES
A. Fire rated walls.
B. Acoustic insulation.
C. Tile backer board.
D. Gypsum wallboard.
E. Joint treatment and accessories.
F. Metal Framing

2. REFERENCES
A. ANSI A108.11 - American National Standard for Interior Installation of Title Backer Units; 1999 (R2005).
B. ANSI A118.9 - American National Standard Specifications for Test Methods and Specifications for Cementitious Backer Units; 1999 (R2005).
C. ASTM C 475/C 475M - Standard Specification for Joint Compound and Joint Tape for Finishing Gypsum Board; 2002.
D. ASTM C 840 - Standard Specification for Application and Finishing of Gypsum Board; 2005.
E. ASTM C 1396/C 1396M - Standard Specification for Gypsum Board; 2004.
F. ASTM E 72 - Standard Test Methods of Conducting Strength Tests of Panels for Building Construction; 2005.

3. GYPSUM BOARD MATERIALS
A. Manufacturers:
1. BPB America Inc: www.bpb-na.com.
2. G-P Gypsum Corporation: www.gp.com/gypsum.
3. National Gypsum Company: www.nationalgypsum.com.
4. USG: www.usg.com.
B. Gypsum Wallboard: ASTM C 1396/C 1396M. Sizes to minimize joints in place; ends square cut.
1. Regular Type:
a. Application: Use for vertical surfaces, unless otherwise indicated.
b. Thickness: 5/8 inch.
c. Edges: Tapered.
2. Fire Resistant Type: Complying with Type X requirements; UL or WH rated.
a. At Assemblies Indicated with Fire-Rating: Use type required by indicated tested assembly.
b. Thickness: 5/8 inch.
c. Edges: Tapered.
3. Ceiling Board: Special sag-resistant type.
a. Application: Ceilings, unless otherwise indicated.
b. Thickness: 1/2 inch.
c. Edges: Tapered.
C. Water-Resistant Gypsum Backing Board: ASTM C 1396/C 1396M; ends square cut.
1. Application: Vertical surfaces behind thinset tile, except in wet areas.
2. Core Type: Regular and Type X, as indicated.
3. Thickness: 5/8 inch.
4. Edges: Tapered.

4. Tile Barker Board Panels
A. Tile backer board panels: 5/8" thick, non-structural, fiberglass-faced, silicone treated moisture barrier, mold resistant gypsum core panel, "DensShield" tile backer board.
B. Joint Reinforcement: 2 inch wide, coated fiberglass mesh tape.
C. Fasteners: Screws, 1-1/4 inch corrosion, resistant; type specified by panel manufacturer for system used.

5. METAL FRAMING
A. Metal Studs: Per ASTM C645, galvanized, size and gauges as noted on drawings. Track shall be one size heavier than studs.

ARCHITECT:
DAVID SCOTT WINDLE, AIA
6201 CAMPUS CIRCLE DRIVE E.
IRVING, TEXAS 75038
TEL: 972.870.1288
WWW.IDSTUDIO4.COM
E-MAIL scottw@idstudio4.com

CORPORATE:
BRINKER RESTAURANT CORPORATION, A VIRGINIA CORPORATION
3000 OLYMPUS BLVD.
DALLAS, TEXAS 75019
972.980.9917
www.brinker.com

09/23/2024
ISSUE FOR BID
THESE DOCUMENTS ARE FOR BIDDING PURPOSES ONLY. DO NOT USE FOR CONSTRUCTION.

RESTAURANT #CH1679
PROTOTYPE 18.5FS

CHILI'S TOOELE
951 N MAIN STREET
TOOELE, UT 84074

CLIENT: BRINKER RESTAURANT CORP. A VIRGINIA CORPORATION

DATE	DESCRIPTION
6/27/2024	ISSUE FOR PERMIT
9/23/2024	ISSUE FOR BID

	DATE	DESCRIPTION

PROJECT NUMBER:
CHI24007

SHEET TITLE:
SPECIFICATIONS
08161 - 09260

SHEET NUMBER:
SP108

6. ACCESSORIES

A. Acoustic Insulation: ASTM C 665; preformed glass fiber, friction fit type, unfaced.

B. Finishing Accessories: ASTM C 1047, galvanized steel, unless otherwise indicated.
1. Types: As detailed or required for finished appearance.

C. Joint Materials: ASTM C 475 and as recommended by gypsum board manufacturer for project conditions.
1. Tape: 2 inch wide, coated glass fiber tape for joints and corners, except as otherwise indicated.
2. Tape: 2 inch wide, creased paper tape for joints and corners, except as otherwise indicated.
3. Ready-mixed vinyl-based joint compound.

D. Fasteners: Screws, per ASTM 1002; 1-1/4' Type 'W' bugle head into wood framing, 1-1/8" Type 'S" bugle head into steel framing, and 3/8" Type "S-12" pan (or low profile) head for steel to steel framing connections.

7. EXAMINATION

A. Verify that project conditions are appropriate for work of this section to commence.

8. ACOUSTIC ACCESSORIES INSTALLATION

A. Acoustic Insulation: Place tightly within spaces, around cut openings, behind and around electrical and mechanical items within partitions, and tight to items passing through partitions.

B. Acoustic Sealant: Install in accordance with manufacturer's instructions.

9. METAL FRAMING

A. Metal Framing, Board Application and Finish Standards: GA216 and ASTM C754 and C840, Studding shall be 16" o.c. unless otherwise noted.

B. Install ceiling boards in the direction and manner which will minimize the number of end-butt joints, and which will avoid end joints in the central area of each ceiling, Stagger end joints at least 4'-0".

C. Install wall/partition boards vertically to avoid end-butt joints wherever possible.

D. Locate either edge or end joints over supports. Stagger joints over different studs on opposite sides of partitions.

E. Space fasteners in gypsum board in accordance with referenced standards and manufacturer's recommendations, except as otherwise indicated.
1. Parallel Application: 12" o.c. in field; 8" o.c. along edges.
2. Perpendicular Application: 12" o.c. in field; 12" o.c. along edges.

10. GYPSUM BOARD INSTALLATION

A. Comply with ASTM C 840 and manufacturer's instructions. Install to minimize butt end joints, especially in highly visible locations.

B. Single-Layer Non-Rated: Install gypsum board in most economical direction, with ends and edges occurring over firm bearing.

C. Fire-Rated Construction: Install gypsum board in strict compliance with requirements of listing authority.

D. Tile Backer Board: Install over framing members where indicated, in accordance with ANSI A108.11 and manufacturer's instructions.

E. Installation on Metal Framing: Use screws for attachment of all gypsum board.

F. Moisture Protection: Treat cut edges and holes in moisture resistant gypsum board with sealant.

11. INSTALLATION OF TRIM AND ACCESSORIES

A. Corner Beads: Install at external corners, using longest practical lengths.

12. JOINT TREATMENT

A. Finish all gypsum board in accordance with ASTM C 840 Level 5.

B. Tape, fill, and sand exposed joints, edges, and corners to produce smooth surface ready to receive finishes.
1. Feather coats of joint compound so that camber is maximum 1/32 inch.
2. Taping, filling, and sanding is not required at surfaces behind adhesive applied ceramic tile and fixed cabinetry.

13. TOLERANCES

A. Maximum Variation of Finished Gypsum Board Surface from True Flatness: 1/8 inch in 10 feet in any direction.

SECTION 09300 - TILE

1. SECTION INCLUDES

A. Tile for floor applications.

B. Tile for wall applications.

C. Ceramic trim.

D. Waterproofing Sheet Membrane

2. REFERENCES

A. ANSI A108 Series/A118 Series/A136.1 - American National Standard Specifications for the Installation of Ceramic Tile (Compendium); 2005.

B. TCA (HB) - Handbook for Ceramic Tile Installation; Tile Council of North America, Inc.; 2006.

3. QUALITY ASSURANCE

A. Maintain one copy of TCA Handbook and ANSI A108 Series/A118 Series on site.

4. DELIVERY, STORAGE, AND HANDLING

A. Protect adhesives from freezing or overheating in accordance with manufacturer's instructions.

5. EXTRA MATERIALS

A. Provide 10 sq. ft of each size, color, and surface finish of tile specified.

6. TILE

A. Refer to finish schedule on the construction documents for material selections.

7. TRIM AND ACCESSORIES

A. Trim: Matching bullnose, surface bullnose, cove base, and cove ceramic shapes as scheduled in sizes coordinated with field tile.
1. Applications: Use in the following locations:
a. Open Edges: Outside edge as noted on drawings at all conditions.
b. Inside Corners: Inside edge as noted on drawings in Restrooms.
c. Floor to Wall Joints: Cove base as noted on drawings in Restrooms.

B. Waterproofing Sheet Membrane: Nobleseal TS as manufactured by Noble Company, Grand Haven, MI.
1. Composite sheet membrane of non-plasticized Chlorinated Polyethylene, 30 mils thick.

C. Waterproofing Membrane:
1. Manufacturer: COMPOSEAL GOLD, a product of Compotite Corporation, Los Angeles, California 90026.
2. Membrane: Four-ply, 40 mil (nominal) gauge heat fused crack isolation waterproof sheet membrane, packaged in 90 foot and 50 foot rolls, 60 inches wide.

8. ADHESIVE MATERIALS

A. All Areas: Mapei, "Ultraflex2", professional grade, single component, high performance, polymer modified thin set mortar; conforming to ANSI A118-4E, ANSI A118.11 and ISO 13007 C2EP1.

9. GROUT MATERIALS

A. All Public and Food Service Areas (except as noted below): Mapei, "Ultracolor Plus", rapid setting sanded polymer-modified grout, conforming to ANSI 118.6, ANSI A118.7 and ISO 13007 CG2WAF. Grout color shown on the drawings.

B. Cooler / Freezer: Cooler/Freezer: Mapei, "Kerapoxy CQ", two-component 100%-solid Epoxy grout and mortar conforming to ANSI A118.3 and ISO 13007 R2/RG. Grout color shown on drawings

10. EXAMINATION

A. Verify that sub-floor surfaces are smooth and flat within the tolerances specified for that type of work and are ready to receive tile.

B. Verify that wall surfaces are smooth and flat within the tolerances specified for that type of work, are dust-free, and are ready to receive tile.

C. Verify that sub-floor surfaces are dust-free and free of substances which would impair bonding of setting materials to sub-floor surfaces.

D. Verify that concrete sub-floor surfaces are ready for tile installation by testing for moisture emission rate and alkalinity; obtain instructions if test results are not within limits recommended by tile manufacturer and setting materials manufacturer.

11. PREPARATION

A. Protect surrounding work from damage.

B. Vacuum clean surfaces and damp clean.

C. Seal substrate surface cracks with filler. Level existing substrate surfaces to acceptable flatness tolerances.

D. Install tile backer board in accordance with ANSI A108.11 and board manufacturer's instructions. Tape joints and corners, cover with skim coat of dry-set mortar to a feather edge.

E. Prepare substrate surfaces for adhesive installation in accordance with adhesive manufacturer's instructions.

12. INSTALLATION - GENERAL

A. Install waterproofing membrane along wall base and up wall surface as detailed in construction documents.

B. Install waterproofing membrane, tile and grout in accordance with applicable requirements of ANSI A108.1 through A108.13, manufacturer's instructions, and TCA Handbook recommendations.

C. Lay tile to pattern indicated. Do not interrupt tile pattern through openings.

D. Cut and fit tile to penetrations through tile, leaving sealant joint space. Form corners and bases neatly. Align floor joints.

E. Place tile joints uniform in width, subject to variance in tolerance allowed in tile size. Make joints watertight, without voids, cracks, excess mortar, or excess grout.

F. Form internal angles square and external edge trims as scheduled.

G. Sound tile after setting. Replace hollow sounding units.

H. Keep expansion joints free of adhesive or grout. Apply sealant to joints.

I. Allow tile to set for a minimum of 48 hours prior to grouting.

j. Grout tile joints. Use standard grout unless otherwise indicated.

K. Apply sealant to junction of tile and dissimilar materials and junction of dissimilar planes.

13. INSTALLATION - FLOORS - THIN-SET METHODS

A. Over interior concrete substrates, install in accordance with TCA Handbook Method F113, dry-set or latex-portland cement bond coat, with standard grout, unless otherwise indicated.
1. Where epoxy bond coat and grout are indicated, install in accordance with TCA Handbook Method F131.

14. INSTALLATION - WALL TILE

A. Over tile backer board, install in accordance with TCA Handbook Method W223, organic adhesive.

15. CLEANING

A. Exposed surfaces of material to be sponged and washed down removing all dirt, smears, or haze. Material to be left thoroughly clean. Use of acid or acid cleaners is prohibited. Use ' Sure Grip ' Daily cleaner to clean the newly installed floors prior to turning over the Building to Owner. Contact the Brinker Construction Manager for equipment requirements and product procurement.
Cleaning Instructions:
1. Fill Mop Bucket with cleaning solution by using a measuring cup to dilute SureGrip Daily Cleaner at the rate of 2 ounces per gallon of water.
2. Use ONLY Micro-Fiber mop heads as supplied in your package.
3. Liberally apply cleaning solution to floor and let it sit for a minute or two.
4. Mop area with a tightly wrung out mop. Do not squeegee.
5. Repeat until floor is clean.
6. Change the mop water when visibly dirty (cloudy).
7. Detailed video instructions are available at www.suregripfloors.com

SECTION 09511 - SUSPENDED ACOUSTICAL CEILINGS

1. SECTION INCLUDES

A. Suspended metal grid ceiling system.

B. Suspension accessories.

2. REFERENCES

A. ASTM C 635 - Standard Specification for the Manufacture, Performance, and Testing of Metal Suspension Systems for Acoustical Tile and Lay-in Panel Ceilings; 2004.

B. ASTM C 636 - Standard Practice for Installation of Metal Ceiling Suspension Systems for Acoustical Tile and Lay-in Panels; 2004.

C. ASTM E 580 - Standard Practice for Application of Ceiling Suspension Systems for Acoustical Tile and Lay-in Panels in Areas Requiring Seismic Restraint; 2002.

D. ASTM E 1264 - Standard Classification for Acoustical Ceiling Products; 1998 (Reapproved 2005).

3. EXTRA MATERIALS

A. See Section 01600 - Product Requirements, for additional provisions.

B. Provide five percent of total acoustical unit area of each type of acoustical unit for Owner's use in maintenance of project.

4. ACOUSTICAL UNITS

A. Kitchen: Certainteed

1. Manufacturers:
a. www.certainteed.com/ceilings.

2. Acoustical Units - General: ASTM E 1264, Class A.

a. Product, model number and finish as scheduled in the construction documents.

5. SUSPENSION SYSTEM(S)

A. Manufacturers:
1. Kitchen - Armstrong; "Prelude Plus XL", Aluminum, 15/16" Exposed Tee

B. Suspension Systems - General: ASTM C 635; All Aluminum, die cut and interlocking components, with stabilizer bars, clips, splices, perimeter moldings, and hold down clips as required. Pre-finished to match ceiling tile color or as noted above.

6. ACCESSORIES

A. Support Channels and Hangers: Galvanized steel; size and type to suit application, seismic requirements, and ceiling system flatness requirement specified.

B. Perimeter Moldings: Same material and finish as grid.
1. At Exposed Grid: Provide L-shaped molding for mounting at same elevation as face of grid.

7. INSTALLATION - SUSPENSION SYSTEM

A. Install suspension system in accordance with ASTM C 636, ASTM E 580, and manufacturer's instructions and as supplemented in this section.

B. Rigidly secure system, including integral mechanical and electrical components, for maximum deflection of 1:360.

C. Install after major above-ceiling work is complete. Coordinate the location of hangers with other work.

D. Hang suspension system independent of walls, columns, ducts, pipes and conduit. Where carrying members are spliced, avoid visible displacement of face plane of adjacent members.

E. Where ducts or other equipment prevent the regular spacing of hangers, reinforce the nearest affected hangers and related carrying channels to span the extra distance.

F. Do not support components on main runners or cross runners if weight causes total dead load to exceed deflection capability.

G. Support fixture loads using supplementary hangers located within 6 inches of each corner, or support components independently.

H. Do not eccentrically load system or induce rotation of runners.

I. Perimeter Molding: Install at intersection of ceiling and vertical surfaces and at junctions with other interruptions.
1. Use longest practical lengths.
2. Overlap and rivet corners.

8. INSTALLATION - ACOUSTICAL UNITS

A. Install acoustical units in accordance with manufacturer's instructions.

B. Fit acoustical units in place, free from damaged edges or other defects detrimental to appearance and function.

C. Fit border trim neatly against abutting surfaces.

D. Install units after above-ceiling work is complete.

E. Install acoustical units level, in uniform plane, and free from twist, warp, and dents.

F. Cutting Acoustical Units:
1. Make field cut edges of same profile as factory edges.

SECTION 09660 - RESILIENT PLANK FLOORING

1. SCOPE OF WORK

A. Furnish labor, materials, services, equipment, and appliances required for resilient flooring and wall work indicated on the Drawings and specified herein.

2. SAMPLES

A. Submit shop drawings, seaming plan, coving details, and manufacturer's technical data, installation and maintenance instructions for flooring and accessories.

B. Submit the manufacturer's standard samples showing the required colors for flooring and applicable accessories.

3. MANUFACTURER

A. The drawings were prepared, and portions of this specification written on the basis of using the products of specific manufacturers. It is not the intent to limit competitive bidding. Products with equal characteristics by other manufacturers are acceptable under the conditions of these specifications.

4. FLOOR / WALL TILE AND ADHESIVE

A. Provide Luxury Solid Vinyl Flooring; Manufacturer, design, pattern, and colors as noted on drawings

B. Flooring shall meet requirements of ASTM F 1700, "Standard Specification for Solid Vinyl Tile," Class III, Type B.

C. Adhesive: Manufacturer's recommended adhesive as follows:
1. Dap Weldwood Original Contact Cement (Red Container) for flooring and wall finish applications.
a. Dap Weldwood Original Contact Cement is a polychloroprene rubber-based contact adhesive that forms permanent bonds on a variety of surfaces. This professional quality adhesive offers instant adhesion. Forms a durable, super-strong bond when parts are assembled, and momentary pressure is applied.
b. Meets performance requirements of Federal Specification A-A-1936A (superseding Federal Specification MMM-A-130B).
c. Meets all CPSC requirements.
2. Provide manufacturer's recommended concrete floor sealer for high moisture applications

5. ACCESSORIES

A. Provide transition/reducing strips tapered to meet abutting materials.

B. Provide resilient edge strips of equal gauge to the flooring, homogeneous vinyl or rubber composition, tapered or bullnose edge, with color to match the flooring.

6. CONDITIONS

A. Temperature: Maintain minimum temperature of 70 degrees F for 48 hours before, during and after installation of flooring. Do not install flooring when temperature is below 70 F degrees.

B. Moisture Tests: After cleaning subfloors, spread small patches of adhesive in several locations and allow to set. If adhesive can be peeled easily from subfloor, repeat test at intervals until adhesive adheres tightly. Do not install flooring until adhesive adheres tightly to subfloor.

C. Surface to Receive Flooring: Wipe surfaces clean, free of paint, oil, wax, or other films which may affect adhesion. Fill cracks, rough areas, joints, and other surface defects in concrete subfloors. Grind ridges, trowel marks, and other surface projections smooth.

7. INSTALLATION

A. Install flooring in strict accordance with the latest edition of manufacturer's written instructions.

B. Using Portland based cementitious base leveler fill and cover all seams, nail heads, voids, cracks, and expansion joints. Achieve smooth, even, firmly attached substrate for best finish results. Gypsum based underlayment not acceptable with Karndean Luxury Vinyl Flooring unless it is first properly prepared.
1. Encapsulate the gypsum with a premium latex primer/sealer.
2. Float with a Portland cement compound using a latex additive (as recommended by the manufacturer) instead of water.
3. Once substrate levelness is achieved continue with the next step.

C. Apply concrete floor sealer to substrate in accordance with manufacturer's recommendations.

B. Install flooring and wall planks wall to wall before the installation of floor-set cabinets, casework, furniture, equipment, movable partitions, etc. Extend flooring into toe spaces, door recesses, closets, and similar openings as shown on the drawings.

C. Scribe, cut, and fit to permanent fixtures, columns, walls, partitions, pipes, outlets, and built-in furniture and cabinets.

D. Install flooring with adhesives, tools, and procedures in strict accordance with the manufacturer's written instructions. Observe the recommended adhesive trowel notching, open times, and working times.

8. INSTALLATION OF ACCESSORIES

A. Place resilient edge strips tightly butted to flooring, and secure with adhesive recommended by the edge strip manufacturer. Install edge strips at edges of flooring that would otherwise be exposed.

B. Apply edge strips where shown on the drawings. Secure units to the substrate, complying with the edge strip manufacturer's recommendations.

9. CLEANING

A. Upon completion, clean flooring, base, and wall panels; remove spots of adhesive, dirt and other contamination using cleanser recommended by flooring manufacturer.

SECTION 09679 - RESILIENT BASE

1. SCOPE OF WORK

A. Furnish labor, materials, services, equipment and appliances required for resilient base work indicated on the Drawings and specified herein.

2. SAMPLES

A. Submit shop drawings, seaming plan, coving details, and manufacturer's technical data, installation and maintenance instructions for flooring and accessories.

B. Submit the manufacturer's standard samples showing the required colors for flooring and applicable accessories.

3. MANUFACTURER

A. The Drawings were prepared, and this Specification written on the basis of using the products of the Roppe Corporation USA, Fostoria, Ohio. It is not the intent to limit competitive bidding. Products with equal characteristics by other manufacturers are acceptable under the conditions of these Specifications.

4. WALL BASE

A. Provide product, sizes, finishes and colors as noted on drawings.

B. Provide 1/8 in. thick, 6 in. high Color-Integrated Wall Base with a matte finish, conforming to ASTM F 1861, Type TV - Vinyl, Thermoplastic, Group 1 - Solid, Style B - Cove.

C. Color as noted on Finish Schedule in the Drawings.

D. Adhesive: As recommended by Manufacturer.

5. ACCESSORIES

A. Provide transition/reducing strips tapered to meet abutting materials.

B. Provide resilient edge strips of equal gauge to the flooring, homogeneous vinyl or rubber composition, tapered or bullnose edge, with color to match the flooring.

6. CONDITIONS

A. Temperature: Maintain minimum temperature of 70 degrees F for 48 hours before, during and after installation of flooring. Do not install flooring when temperature is below 70 F degrees.

B. Surface to Receive Wall Base: Wipe surfaces clean, free of paint, oil, wax, or other films which may affect adhesion. Fill cracks, rough areas, joints, and other surface defects in subbase.

7. INSTALLATION

A. Install wall base in strict accordance with the latest edition of manufacturer's written instructions.

B. Install wall base after the installation of cabinets, casework, furniture, equipment, movable partitions, etc. Extend flooring into toe spaces, door recesses, closets, and similar openings as shown on the drawings.

C. Scribe, cut, and fit to permanent fixtures, columns, walls, partitions, pipes, outlets, and built-in furniture and cabinets.

D. Install wall base with adhesives, tools, and procedures in strict accordance with the manufacturer's written instructions. Observe the recommended adhesive trowel notching, open times, and working times.

8. INSTALLATION OF ACCESSORIES

A. Apply top set wall base to walls, columns, casework, and other permanent fixtures in areas where top-set base is required. Install base in lengths as long as practical, with inside corners fabricated from base materials that are mitered or coped. Tightly bond base to vertical substrate with continuous contact at horizontal and vertical surfaces.

B. Place resilient edge strips tightly butted to flooring, and secure with adhesive recommended by the edge strip manufacturer. Install edge strips at edges of flooring that would otherwise be exposed.

C. Apply edge strips where shown on the drawings. Secure units to the substrate, complying with the edge strip manufacturer's recommendations.

9. CLEANING

A. Upon completion, clean flooring, base, and wall panels; remove spots of adhesive, dirt and other contamination using cleanser recommended by flooring manufacturer.

SECTION 09729 - MURAL INSTALLATION

1. SECTION INCLUDES

A. Surface preparation by GC.

B. Installation by Owner.

2. REFERENCES

A. ASTM E84 - Standard Test Method for Surface Burning Characteristics of Building Materials.

3. REGULATORY REQUIREMENTS

A. Conform to applicable code for flame and smoke ratings of 25/50 when tested to ASTM E84. Federally specified limits for flame, smoke development and flash over must be met according to ASTM-E84 and NFPA286 tests.

4. DELIVERY, STORAGE, AND PROTECTION

A. Inspect roll materials on site to verify acceptance.

B. Protect packaged adhesive from temperature cycling and cold temperatures.

C. Do not store roll goods on end.

5. ENVIRONMENTAL REQUIREMENTS

A. Do not apply materials when surface and ambient temperatures are outside the temperature ranges required by the adhesive or mural product manufacturer.

B. Maintain these conditions 24 hours before, during, and after installation of adhesive and covering.

6. MATERIALS

A. Wall Murals: 3M Scotch Print Graphics. Printed on 8620 base film and 3M overlaminate. Murals are NIC, which means the murals are furnished and installed by Owner.

B. Adhesive: Type recommended by covering manufacturer to suit application to substrate. Adhesives and primers must contain mildew inhibitors.

C. Substrate Filler: As recommended by adhesive and covering manufacturers; compatible with substrate.

D. Substrate Cleaner: 3M brand adhesive cleaner and wax remover, Part No. 8984.

7. EXAMINATION

A. Verify that substrate surfaces are primed and painted and are ready to receive work and conform to requirements of the covering manufacturer.

B. Measure moisture content of surfaces using an electronic moisture meter. Do not apply coverings unless moisture content of surfaces are below 12 percent.

C. Verify flatness tolerance of surfaces does not vary more than 1/8 inch in 10 feet nor vary at a rate greater than 1/16 inch/foot.

8. PREPARATION

A. G.C. to examine all substrata, correct defects, and complete all work that penetrates the substrata before Owner's Mural Vendor begins wallcovering installation. G.C. is responsible to provide an acceptable wall surface for Owner's Mural vendor to install wall mural. Gypsum wall board level of finish is to be Level 5.
1. Level 5: All joints and interior angles shall have tape embedded in joint compound and shall be immediately wiped with a joint knife leaving at thin coating of joint compound over all joints and interior angles. Two separate coats of joint compound shall be applied over all flat joints and one separate coat of joint compound shall be applied over interior angles. Fastener heads and accessories shall be covered with three separate coats of joint compound. A thin skim coat of joint compound trowel applied, or a material manufactured especially for this purpose and applied in accordance with manufacturer's recommendations, applied to the entire surface. The surface shall be smooth and free of tool marks and ridges. Note: It is recommended that the prepared surface be coated with a drywall primer prior to the application of finish paint. See section C below in regard to painting.

B. Sand and wipe wall to remove excess drywall dust.

C. For new drywall construction prior to application of wallcovering, wall shall be painted with compatible primer to Latex paint (two coats). Finish coat to be Semi-gloss Latex paint.

D. After finishing drywall, ensure that all surfaces are completely flat and smooth with no raised areas or indentations as the vinyl will telegraph any bad areas.

E. Drying and curing time for substrate painting manufacturer MUST be observed. All air-drying paints should be allowed to dry a minimum of 72 hours prior to mural application. The 72-hour air drying period is to be complete 28 days prior to restaurant opening. At this point G.C. should coordinate with Owner's Mural Vendor for final acceptance of wall surface. Any deficient items noted by Owner's Mural Vendor shall be corrected by GC and a new 72-hour air drying period should be complete so that Owner's Mural Vendor may begin their install 21 days prior to restaurant opening. Cleaning items listed below are responsibility of Owner's Mural Installer.

F. Use only a pencil for marking walls and back of wallcovering. Do not use ballpoint or marking pen, they will bleed through the surface.

G. When using solvent for cleaning substrate, it is essential that proper precautionary measures, as established by the solvent manufacturer for handling of such materials, be observed.

H. Clean substrates with adhesive cleaner per manufacturer's written directions; wipe dry with a lint-free cloth before solvent evaporates from surface.

I. After cleaning, all materials should be handled with mechanical devices or while wearing clean, cloth gloves.

J. Surface Appurtenances: Remove or mask electrical plates, hardware, light fixture trim, escutcheons, and fittings prior to preparing surfaces or finishing.

K. Vacuum clean surfaces free of loose particles. Ensure the flat surfaces and the crown molding above and below this area are free of all dust and debris.

9. INSTALLATION

A. Apply adhesive and covering in accordance with manufacturer's instructions.

B. Apply adhesive to wall surface immediately prior to application of covering.

C. Use covering in pattern sequence.

D. Razor trim edges on flat work table. Do not razor cut on gypsum board surfaces.

E. Apply covering smooth, without wrinkles, gaps, or overlaps. Eliminate air pockets and ensure full bond to substrate surface. Butt edges tight.

F. Horizontal seams are not acceptable.

G. Do not seam within 2 inches of internal corners or within 6 inches of external corners.

H. Edges of graphics must be trimmed perfectly straight at a 90-degree angle. This will ensure that seams align properly when applied to the wall surface.

I. Remove excess adhesive while wet from seam before proceeding to next covering sheet. Wipe clean with dry cloth.

SECTION 09771 - PREFINISHED PANELS

1. SECTION INCLUDES

A. Prefinished panel system for adhesive mounting.

2. MANUFACTURER

A. The drawings were prepared, and portions of this specification written on the basis of using the products of Crane Composites, Inc. (formerly Kemlite) 23525 West Eames Street, Channahon, IL 60410; Ph: (800) 435-0080; www.cranecomposites.com. It is not the intent to limit competitive bidding. Products with equal characteristics by other manufacturers are acceptable under the conditions of these Specifications.

3. FIBERGLASS REINFORCED PANEL (FRP)

A. Thickness: 3/32"

B. Finish: Pebble

C. Color: As scheduled on Construction Documents.

D. Moldings: Solid vinyl, wide profile and match the color of the panels.

E. Closures: Solid vinyl, wide profile and match the color of the panels.

4. ADHESIVE

A. Adhesive as recommended by manufacturer for required substrates.

5. SEALANT

A. Bright white, 2-part urethane sealant, as recommended by FRP panel manufacturer; VOC Content: 0.0 g/l.

6. INSTALLATION

A. Install in accordance with manufacturer's instructions.

B. Use the adhesives recommended by the panel manufacturer unless prohibited by local regulations; obtain manufacturer's approval of alternative adhesives.

C. Avoid contamination of panel faces; clean as necessary and replace if not possible to repair to original condition.

D. Install panels over water resistant drywall in strict accordance with manufacturers recommendations, using non-flammable adhesive (100% coverage).
1. Drywall must be installed (and all joints taped) floor to ceiling to provide a good bondable surface to accept installation of FRP panels.

E. Discard units of material which are unsound, warped, bowed, twisted, improperly treated, or too small to fabricate, work with minimum of joints or optimum jointing arrangements, or which are of defective manufacture with respect to surfaces, sizes, or patterns.

F. Scribe and cut work to fit adjoining work.

G. Sealant:
1. Fill grooves in trim accessories with sealant before installing FRP panels.
2. Bed inside corner trim in bead of sealant.
3. Remove excess sealant and smears as FRP panels are installed.
4. Clean in accordance with sealant manufacturer's instructions.
5. Tolerances: Install FRP panels within manufacturer's installation tolerances.

SECTION 09900 - PAINTS AND COATINGS

1. SECTION INCLUDES

A. Surface preparation.

B. Field application of paints, stains, varnishes, and other coatings.

2. DELIVERY, STORAGE, AND HANDLING

A. Deliver products to site in sealed and labeled containers; inspect to verify acceptability.

B. Container Label: Include manufacturer's name, type of paint, brand name, lot number, brand code, coverage, surface preparation, drying time, cleanup requirements, color designation, and instructions for mixing and reducing.

C. Paint Materials: Store at minimum ambient temperature of 45 degrees F and a maximum of 90 degrees F, in ventilated area, and as required by manufacturer's instructions.

3. ENVIRONMENTAL REQUIREMENTS

A. Do not apply materials when surface and ambient temperatures are outside the temperature ranges required by the paint product manufacturer.

B. Provide lighting level of 80 ft candles measured mid-height at substrate surface.

4. SUBMITTALS

A. Prepare two (2) color/texture samples for each color for each type of substrate to be painted or stained per SUBMITTALS.

B. Make samples not less than twelve inches (12") square.

C. Submit manufacturer's printed literature on each coating system to be used.

5. EXTRA MATERIALS

A. Supply 1 gallon of each color; store where directed.

B. Label each container with color in addition to the manufacturer's label.

6. MANUFACTURERS

A. The drawings were prepared, and this specification written based on using the products of PPG, Sherwin-Williams and Scuffmaster. No substitutions will be allowed. Refer to Paragraph 3.08 of this section for ordering information.

7. PAINTS AND COATINGS - GENERAL

A. Paints and Coatings: Ready mixed, except field-catalyzed coatings. Prepare pigments to a soft paste consistency, capable of being readily and uniformly dispersed to a homogeneous coating.

B. Volatile Organic Compound (VOC) Content:
1. Provide coatings that comply with the most stringent requirements specified in 40 CFR 59, Subpart D--National Volatile Organic Compound Emission Standards for Architectural Coatings.

8. EXAMINATION

A. Examine surfaces scheduled to be finished prior to commencement of work. Report any condition that may potentially affect proper application.

B. Measure moisture content of surfaces using an electronic moisture meter. Do not apply finishes unless moisture content of surfaces are below the following maximums:
1. Wood: 15 percent, measured in accordance with ASTM D 4442.

9. PREPARATION

A. Surfaces: Correct defects and clean surfaces which affect work of this section.

B. Marks: Seal with shellac those which may bleed through surface finishes.

C. Impervious Surfaces: Remove mildew by scrubbing with solution of tetra-sodium phosphate and bleach. Rinse with clean water and allow surface to dry.

D. Gypsum Board Surfaces to be Painted: Fill minor defects with filler compound. Spot prime defects after repair. Gypsum ceiling surfaces in all Public areas are required to have a Level 5 finish surface; do not start painting until surface finish level is verified. Beginning of painting gypsum indicates acceptance of surface.

E. Aluminum Surfaces to be Painted: Remove surface contamination by steam or high pressure water. Remove oxidation with acid etch and solvent washing. Apply etching primer immediately following cleaning.

F. Galvanized Surfaces to be Painted: Remove surface contamination and oils and wash with solvent. Apply coat of etching primer.

G. Uncoated Steel and Iron Surfaces to be Painted: Remove grease, mill scale, weld splatter, dirt, and rust. Prime paint entire surface; spot prime after repairs.

H. Interior Wood Items to Receive Opaque Finish: Wipe off dust and grit prior to priming. Seal knots, pitch streaks, and sappy sections with sealer. Fill nail holes and cracks after primer has dried; sand between coats. Back prime concealed surfaces before installation.

I. Interior Wood Items to Receive Transparent Finish: Wipe off dust and grit prior to sealing, seal knots, pitch streaks, and sappy sections with sealer. Fill nail holes and cracks after sealer has dried; sand lightly between coats. Prime concealed surfaces with gloss varnish reduced 25 percent with thinner.

J. Wood Doors to be Field-Finished: Seal wood door top and bottom edge surfaces with clear sealer.

K. Metal Doors to be Painted: Prime metal door top and bottom edge surfaces.

10. APPLICATION

A. Apply products in accordance with manufacturer's instructions.

B. Do not apply finishes to surfaces that are not dry. Allow applied coats to dry before next coat is applied.

C. Apply each coat to uniform appearance. Apply each coat of paint slightly darker than preceding coat unless otherwise approved.

D. Sand wood and metal surfaces lightly between coats to achieve required finish.

E. Where clear finishes are required, tint fillers to match wood. Work fillers into the grain before set. Wipe excess from surface.

F. Coverage coats noted herein are minimum requirements. Contractor shall provide additional coats as needed for complete coverage.

11. FINISHING MECHANICAL AND ELECTRICAL EQUIPMENT

A. Painting mechanical and electrical work is limited to items exposed in occupied spaces unless noted otherwise.

B. Remove unfinished louvers, grilles, covers, and access panels on mechanical and electrical components and paint separately.

12. SCHEDULE - SURFACES TO BE FINISHED

A. Do Not Paint or Finish the Following Items:
1. Items fully factory-finished unless specifically noted.
2. Fire rating labels, equipment serial number and capacity labels.

B. Mechanical and Electrical: Use paint systems defined for the substrates to be finished.
1. Paint all insulated and exposed pipes, conduit, boxes, hangers, brackets, collars and supports, mechanical equipment, and electrical equipment occurring in finished areas, unless otherwise indicated.
2. Paint shop-primed items occurring in finished areas.
3. Paint interior surfaces of air ducts and convector and baseboard heating cabinets that are visible through grilles and louvers with one coat of flat black paint to visible surfaces.
4. Paint dampers exposed behind louvers, grilles, and convector and baseboard cabinets to match face panels.

ARCHITECT:

DAVID SCOTT WINDLE, AIA

6201 CAMPUS CIRCLE DRIVE E.
IRVING, TEXAS 75038
TEL: 972.870.1288
WWW.IDSTUDIO4.COM
E-MAIL scottw@idstudio4.com

CORPORATE:
BRINKER RESTAURANT CORPORATION,
A VIRGINIA CORPORATION
3000 OLYMPUS BLVD.
DALLAS, TEXAS 75019
972.980.9917
www.brinker.com

09/23/2024
ISSUE FOR BID
THESE DOCUMENTS ARE FOR BIDDING PURPOSES ONLY. DO NOT USE FOR CONSTRUCTION.

RESTAURANT #CH1679
PROTOTYPE 18.5FS

CHILI'S TOOELE
951 N MAIN STREET
TOOELE, UT 84074

CLIENT: BRINKER RESTAURANT CORP.
A VIRGINIA CORPORATION

DATE	DESCRIPTION
6/27/2024	ISSUE FOR PERMIT
9/23/2024	ISSUE FOR BID

	DATE	DESCRIPTION

PROJECT NUMBER:
CHI24007

SHEET TITLE:
SPECIFICATIONS
09260 - 09900

SHEET NUMBER:
SP109

C. Paint both sides and edges of plywood backboards for electrical and telephone equipment before installing equipment.

13. TENTATIVE PAINT LIST: Where any particular application is not mentioned in this list, Contractor shall figure on application of manufacturer's specification for application which is consistent with types and qualities listed herein. Colors are indicated on drawings.

EXTERIOR SURFACES

1. Fiber cement siding, trim, soffits – "Painted":

PPG Paints:
1st coat: PPG 6001 Hydrosealer Primecoat.
2nd coat: PPG Pitt-Tech 90-474 HP Acrylic Flat.
3rd coat: Same as second coat.

S-W Paints:
1st coat: SW Loxon Concrete & Masonry Primer A24W8300.
2nd coat: SW A-100 Exterior Latex Flat A6-100 Series.
3rd coat: Same as second coat.

2. Wood Siding, Wood trim, Soffits, and Rafters - "Painted":

PPG Paints:
1st coat: PPG Paints 6001 Hydrosealer Primecoat.
2nd coat: PPG Pitt-Tech 90-474 HP Acrylic Flat.
3rd coat: Same as second coat.

S-W Paints:
1st coat: SW Exterior Latex Wood Primer B42W8041.
2nd coat: SW A-100 Exterior Latex Flat A6-100 Series.
3rd coat: Same as second coat.

3. Natural Woods and Soffits - "Stained":

PPG Paints:
1st coat: PPG Paints Flood Pro Series #FLD 832 Semi-Transparent Stain
2nd coat: Same as first coat
3rd coat: PPG Deft-#DFT258 Semi-Gloss Exterior Polyurethane.

S-W Paints:
1st coat: SW SuperDeck Semi-Transparent Stain SD3T15
2nd coat: SW Same as first coat.
3rd coat: If needed same as second coat.

4. Ferrous Metals and Exposed Gas Lines (Painted):

PPG Paints:
1st coat: PPG Pitt-Tech 90-474 HP Acrylic Satin
2nd coat: Same as first coat.

S-W Paints:
1st coat: Pro Industrial Acrylic Egg-Shell B66-660 Series.
2nd coat: Same as first coat.

5. Decorative Metals (Clear Sealer):

PPG Paints:
1st coat: PPG "Break-Through" V50-V Series, Clear Acrylic Sealer
2nd coat: Same as first coat.

S-W Paints:
1st coat: Sher-Clear 1K, Waterborne Acrylic Clear Coat
2nd coat: Same as first coat.

6. Unit Masonry:

PPG Paints:
1st coat: Fill with PPG Paints Concrete Coatings Block Filler 3010-1200 to DFT of 9.0 to 13.6 Mils. Ensure coverage is consistent.
2nd coat: Finish with PPG Paints Fortis 450 Exterior 100% Acrylic Satin 6403
3rd coat: Same as second coat.

S-W Paints:
1st coat: Fill with SW PrepRite Block Filler B25W25 to DFT of 8.0 Mils. Ensure coverage is consistent.
2nd coat: Finish with SW SuperPaint Exterior Latex Satin A89-1100 Series.
3rd coat: Same as second coat.

7. Pre-painted Equipment (Rooftop Equipment, Transformers, Etc.):

PPG Paints:
1st coat: PPG Pitt-Tech Plus HP 4216 Acrylic Semi- Gloss
2nd coat: Same as first coat.

S-W Paints:
1st coat: SW Pro Industrial Acrylic Semi-Gloss B66-650 Series.
2nd coat: SW Same as first coat.

8. Pre-primed metal doors and frames:

PPG Paints:
1st coat: PPG Pitt-Tech Plus HP 4216 Acrylic Semi- Gloss
2nd coat: Same as first coat.

S-W Paints:
1st coat: SW Pro Industrial Acrylic Semi-Gloss B66-650 Series.
2nd coat: SW Same as first coat.

9. Fiberglass doors:

PPG Paints:
1st coat: PPG Paints 17-921 Seal Grip Multi-Purpose Primer.
2nd coat: PPG Pitt-Tech Plus HP 4216 Acrylic Semi- Gloss
3rd coat: Same as second coat.

S-W Paints:
1st coat: SW Extreme Bond B51W150.
2nd coat: SW Pro Industrial Acrylic Semi-Gloss B66-650 Series.
3rd coat: Same as second coat.

10. Stucco & EIFS:

PPG Paints:
1st Coat: PPG Paints Hydrosealer 6001 primecoat
2nd Coat: PPG Paints Fortis 450 Exterior 100% Acrylic Satin 6403
3rd Coat: Same as second

S-W Paints:
1st coat: SW Loxon Concrete & Masonry Primer A24W8300.
2nd coat: SW SuperPaint Exterior Latex Satin A89-1100 Series.
3rd coat: Same as second coat.

INTERIOR SURFACES

1. Wood trim, siding "Painted":

PPG Paints:
1st coat: PPG Paints 17-921 Seal Grip Multi-Purpose Primer
2nd coat: PPG Pitt-Tech Plus HP 4216 Acrylic Semi- Gloss
3rd Coat: Same as second.

S-W Paints:
1st coat: SW Wall & Wood Primer B28W8111.
2nd coat: SW Solo 100% Acrylic Semi-Gloss A76 Series.
3rd coat: Same as second coat.

2. Beams, Joists & Trusses "Painted":

PPG Paints:
1st Coat: PPG Paints 17-921 Seal Grip Multi-Purpose Primer
2nd Coat: PPG Pitt-Tech 90-474 HP Acrylic Egg Shell
3rd Coat: Same as second.

S-W Paints:
1st coat: SW Wall & Wood Primer B28W8111.
2nd coat: SW Pro Industrial Acrylic Eggshell B66-660 Series.
3rd coat: Same as second coat.

3. Wood Beams, Joist or Trusses "Stained":

PPG Paints
1st Coat: PPG Deft- #DFT300 Oil Modified WB Wood Stain

S-W Paints;
1st coat: SW Wood Classics Interior Oil Stain 250 A49-800 Series.

4. Wood Trim "Wall Caps" & Wood Doors - "Stained":

PPG Paints:
1st Coat: PPG Deft- #DFT300 Oil Modified WB Wood Stain
2nd Coat: PPG Defthane - #DFT26 Satin Polyurethane Varnish
3rd Coat: PPG Defthane - #DFT26 Satin Polyurethane Varnish

S-W Paints:
1st coat: SW Wood Classics Interior Oil Stain 250 A49-800 Series.
2nd coat: SW Wood Classics Satin Polyurethane Varnish A67F1.
3rd coat: Same as second coat.

5. Gypsum Wallboard:

PPG Paints:
1st coat: PPG SpeedHide 6-4 MaxPrime Primer Sealer
2nd coat: PPG SpeedHide 6-411 Eggshell Acrylic Enamel
3rd coat: Same as second coat.

S-W Paints:
1st coat: SW ProMar 200 Zero VOC Latex Primer B28W2600.
2nd coat: SW ProMar 200 Zero VOC Latex Eggshell B20-2600 Series.
3rd coat: Same as second coat.

Scuffmaster:
1st coat: Primemaster Prime/Sealer, Master Coating Technologies
2nd coat: Scuffmaster ScrubTough, Master Coating Technologies
3rd coat: Same as second coat.

6. Ferrous Metal and exposed Gas Lines, Doors, Door Frames:

PPG Paints:
1st coat: PPG Pitt-Tech Plus HP 4216 Acrylic Semi- Gloss
2nd coat: PPG Pitt-Tech Plus HP 4216 Acrylic Semi- Gloss

S-W Paints:
1st coat: SW Pro Industrial Acrylic Semi-Gloss B66-650 Series.
2nd coat: SW Pro Industrial Acrylic Semi-Gloss B66-650 Series.

7. Wood Trim and Paneling "Stained":

PPG Paints:
1st Coat: PPG Deft- #DFT300 Oil Modified WB Wood Stain
2nd Coat: PPG Deft -#DFT259 Water Base Polyurethane Satin Varnish
3rd Coat: PPG Deft -#DFT259 Water Base Polyurethane Satin Varnish

S-W Paints:
1st coat: SW Wood Classics Interior Oil Stain 250 A49-800 Series.
2nd coat: SW Wood Classics Water Based Polyurethane Satin Varnish A68F90.
3rd coat: Same as second coat.

8. At Dissimilar Metals:

PPG Paints
1st Coat: PPG Pitt-Guard 97-145 Black Epoxy DTR Mastic

S-W Paints:
1st coat: SW Macropoxy B58-400 Series Black HS Epoxy.

14. Ordering Information:

B. All finish coat paint information can be obtained from:

Sherwin-Williams Paint Company
2100 Lakeside Blvd., Suite 500
Richardson, TX 75082
National Account Manager: Mike Konciljia 602-653-9577 Mike.K@sherwin.com

C. All orders must be placed through PPG Paints Professional Paint Store National Locations.
National Account Manager: Rick Z. Garlin 317-318-5800 garlin@ppg.com

D. All finish coat paint information can be obtained from:
National Account Manager: April Willis 214.394.4369 april.willis@wolfgordon.com

SECTION 09940 - DUCT LINER

1. SECTION INCLUDES
A. Duct liner applied to underside of roof decking.

2. QUALITY STANDARDS
A. All materials shall be furnished by one manufacturer only.

3. SUBMITTALS
A. Submit 12 x 12 inch, samples, per SUBMITTALS Section, of materials to be supplied for Owner's acceptance.

4. MANUFACTURER
A. The drawings were prepared and this specification written on the basis of using the products of Knauf Fiber Glass, Shelbyville, Indiana. Such is intended to establish minimum quality standards, not to limit competitive bidding. Contact Lin Baker or Mark Snodgrass with "General Insulation" at (214)688-7000. Suppliers and products with equal or superior characteristics by other manufacturers are acceptable under conditions of the Specifications.

5. MATERIALS
A. Duct Liner: Knauf Rigid Plenum Liner, one inch thick by 48" x 120", with black polymer top layer and factory applied black overspray. No verbiage or any type of markings to appear on black side of liner.

6. DELIVERY AND STORAGE
A. Deliver materials in original unopened packages and store in enclosed shelter providing protection from damage and exposure to the elements. Remove damaged or deteriorated materials from premises.

7. INSTALLATION
A. Nail or adhesively apply duct liner to underside of all exposed roof/ceiling decking with foil face toward deck. Fasten to deck securely such that surface is free of dimples and liner holds flush to deck with no sagging.

DIVISION 10 – SPECIALTIES

SECTION 10172 - STAINLESS STEEL TOILET PARTITIONS

1. SECTION INCLUDES
A. Furnish, deliver, and install all Toilet Partitions as indicated on the drawings and as required by actual conditions at the building. The Toilet Partitions shall include the furnishing of all devices necessary for the proper installation and application of the Toilet Partitions.

2. REFERENCES
A. All Toilet Partitions must be scheduled, supplied, and installed in accordance with Local Building Code, ANSI (American National Standards Institute), ADA (Americans with Disabilities Act). In all cases the above references shall be taken to mean the latest edition of that particular standard including all revisions.

3. SUBMITTALS
A. Make all submittals in accordance with Section: 01300
B. Submit (2) copies of detailed shop drawings for the Owner's review within (2) weeks of being awarded this subcontract.

4. MANUFACTURERS
A. Approved Manufacturers: Only those manufacturers' names and product numbers listed herein, are approved for use on this project. All other manufacturers must request approval as per section (1.04 - A - Substitutions). Absolutely no variations from listed and preapproved items will be permitted.
a. Fry Specialty Company, Santee, CA.- 619-562-8446
b. Accurate Partitions, Lyons, IL. -708-442-6800
c. Global Partitions, Eastanollee, GA. – 706-827-2700

5. MATERIALS
A. Construction: Doors, Panels and Pilasters shall be constructed of two sheets of panel flatness Type 304, stainless steel, laminated under pressure to a "Vertical" (1/2") honeycomb core for impact resistance, rigidity and sound deadening. Formed edges to be welded together and interlocked, under tension, with a roll-formed oval crown locking bar, mitered, welded, and ground smooth at the corners. Honeycomb to be of virgin, long fiber paper with a maximum 12.5mm (1/2") cell size.
B. Doors: Shall be 25mm (1") thick with cover sheets not less than 22ga. (0.8mm).
C. Panels: Shall be 25mm (1") thick with cover sheets not less than 22ga. (0.8mm). Panels over 48" shall be of 20 ga.
D. Pilasters: Shall be 32mm (1.25") thick with cover sheets not less than 18 ga. (1.2mm).
E. Hardware and Fittings: Are to be by Jacknob or Hadrian. All panel and pilaster brackets and all door hardware shall be chrome plated zinc die castings, standard. Fasteners are 14 x 1-3/4 and 14 x 5/8 TR-27 6-lobe security screws. Doors shall be equipped with a gravity type hinge mounted on the lower pilaster hinge bracket. Doors shall be equipped with a gravity type hinge mounted on the lower pilaster hinge bracket. Door hinges shall be the wraparound type and adjustable to permit the door to come to rest at any position when not latched. Each door to be fitted with a combined coat hook and bumper and a concealed latch, with face mortised flush with edge strip of door Barrier-free doors shall include thumb turn lever to activate latch without fingertip grip application. Both standard and barrier-free latches shall have a turn slot designed to allow emergency access from exterior. The combined stop and keeper shall have a 19mm (0.75") diameter bumper locked in place. Threaded upper hinge pin shall have a metal core and self-lubricating nylon sleeve to ensure smooth, quiet operation. Pilaster shoes shall be a welded one-piece design made from polished stainless steel. Two-piece shoes that can disassemble when kicked are unacceptable.
F. Finish: Diamond Textured finish.

6. DELIVERY, STORAGE AND HANDLING
A. Delivery and Marking: Toilet Partitions must be delivered to the job site in the manufacturers' original packages and marked with identifying numbers to correspond with the approved shop drawings.

7. WARRANTY
A. Written Guarantee: The Toilet Partition manufacturer shall guarantee all Toilet Partitions by written certification, for a period of (1) year from date of certified substantial performance of the project, against any defects in design, materials and workmanship. Any defects as described will be made good by the manufacturer at no additional cost to the owner.

8. INSTALLATION
A. Mounting Locations: All Toilet Partitions must be mounted according Manufacturers standard locations and those specified on the drawings, including installation and adjustment of hardware.
B. All handicapped bathroom fixtures and toilet accessory installation dimensions shall comply with all ADA, Federal State and Local handicapped code requirements.

9. ADJUSTMENT
A. Final Preparation: At final completion, Toilet Partitions shall be left clean and free from disfigurement. Make all final adjustments. Where Toilet Partitions are found defective, repair or replace or otherwise correct as directed.

SECTION 10442 – ARCHITECTURAL SIGNAGE

1. DESIGN AND FABRICATION
A. All patterns for fabrication, regardless of production technique, method, or process specified, shall be approved by the Owner prior to production in order to ensure conformity to design with regard to letter form and height, wording, spelling, capitalization, punctuation, letter spacing, leading and layout or composition.

2. MANUFACTURER
A. Interior Signage: The drawings were prepared and this specification written on the basis of using the products of Kroy Sign Systems, Scottsdale, Arizona.
B. Street Address Signage: The drawings were prepared and this specification written on the basis of using the products of WestOn Letters, North Hollywood, CA.
C. It is not the intent to limit competitive bidding. Products with equal characteristics by other manufacturers are acceptable under the conditions of these specifications.

3. GENERAL
A. Regulatory signage series opaque acrylic, matte finish plaques, with front surface hot stamp graphics, in low profile frame. Configuration shown on drawings to conform with Americans with Disabilities Act requirements.
B. Provide one sign (unit) for each restroom door opening for public facilities.
C. Street Address Signage: Lettering to be 6" tall, University Roman Bold, Color: Medium Bronze, ¾ inch standoffs. Lettering to be ordered from: http://www.westonletters.com/index_23.php?catID=23&file=HN-Styles.htm

4. INSTALLATION
A. Installation shall be started at the time established by the General Contractor. However, no sign work shall be permitted in the building before the building is completely enclosed and all painting and work of other trades is finished.
B. Install signs in accord with approved shop drawings. Install true to line, plumb, level, square, in proper planes with other work and free from objectionable defects. Anchor to adequately resist all normally subjected stresses.

SECTION 10523 - FIRE EXTINGUISHERS AND ACCESSORIES

1. SECTION INCLUDES
A. Fire extinguishers and Mounting brackets

2. SUBMITTALS
A. Prepare and submit product data sheets for acceptance.
B. Provide new portable fire extinguishers which are UL listed and bear UL "Listing Mark" for type, rating, and classification of extinguisher indicated.

3. MANUFACTURER
A. The drawings were prepared, and this specification written on the basis of using the product and the specifications of the J. L. Industries Division, J. N. Johnson Co., Inc. Minneapolis, Minnesota. It is not the intent to limit competitive bidding. Products with equal characteristics by other manufacturers are acceptable under the conditions of these specifications.

4. MATERIALS
A. Review number and location with Fire Marshal before purchasing and installing.
B. Dining Area Fire Extinguishers: Provide a minimum of four (after verification with AHJ, quantity, location, and class), equal to J.L. Industries "Cosmic A" Series Model 10E, wall-mounted 10 lb. capacity with nozzle. Fire extinguishers shall be a multi-purpose dry chemical type, enameled, metal containers with pressure indicated gauges, for Class A, B, and C fires. Approved equal fire extinguisher as manufactured by Larsen's Manufacturing Co., or Muckle Manufacturing Co. shall also be acceptable for use on this project.
C. Kitchen Area Fire Extinguishers: Provide a minimum of two, equal to J.L. Industries "Galaxy Series - Model 6" wall-mounted, dry chemical type 40 BC UL rated, 6 lb. capacity fire extinguishers with pressure gauge.
D. Brackets: Equal to J.L. Industries "Mark Brackets, Model No. MB 846" complete with required anchors, of required size for Model 10E fire extinguisher and "Mark Brackets, Model MB808" for Model 6 fire extinguisher.
E. Anchors: Non-corrosive types as required by wall conditions.

5. INSTALLATION
A. Mount on walls in strict conformance with manufacturer's instructions, in locations directed by local fire marshal.

SECTION 10736 - METAL ENGINEERED CANOPY (ALTERNATE)

1. SECTION INCLUDES
A. Steel Framing
B. Roof Panels and Edge Trim
C. Canopy shall be custom designed to fit conditions indicated on the plans. Design shall be in accord with allowable values assigned by the most restrictive governing code. Complete design calculation showing layout, member forces and stress control points are to be submitted to the Owner for each design. All design shall be under the supervision of a registered professional engineer.

2. REFERENCE STANDARDS
A. American Society for Testing Materials (ASTM)

3. SUBMITTALS
A. Shop Drawings: Submit for acceptance prior to start of fabrication. Show configurations, member sizes, allowable stresses, loadings, locations of each shelter type, and size, location, configuration, and method of attachment of members and lateral bracing.
B. Samples: Submit duplicate samples of manufacturer's standard factory finishes for selection and acceptance.

4. GUARANTEE
A. Contractor and subcontractor jointly and unconditionally guarantee metal canopy for period of one year from date of Final Completion against defective materials and workmanship, and against leaks (except leaks caused by abuse, lightning, hurricane, tornado, hail storm and other unusual climatic phenomena of the elements). During guarantee period, Contractor and subcontractor jointly agree that within 24 hours of receipt of notice from Owner, defects in roof, within meaning of guarantee, will be immediately repaired and within 5 working days after receipt of notice, defective roof will be restored to standard of original specifications without cost to Owner, including all labor, materials and other costs incidental to work.

5. MANUFACTURER
A. The drawings were prepared, and this specification written on the basis of using the products of "Alumet", Mesquite, Texas, (972) 285-8811. It is not the intent to limit competitive bidding. Products with equal characteristics by other manufacturers are acceptable under the conditions of these specifications.

6. MATERIALS
A. Systems: Manufacturer's standard open canopy with roof panels and bay spacing dimensions indicated on drawings.
B. Columns: Square, hot-dip galvanized high-strength steel tubing with minimum yield point of 46,000 psi; ASTM A-500, Grade B.
C. Framing Members: 6061T6 Aluminum "C" seam with minimum yield point of 35 KSI and ultimate strength of 38 KSI.
D. Fascia: 6-1/2-inch roll formed fascia, 3004H36 aluminum, .050 inches thick, ultimate strength of 35 KSI and minimum yield point of 28 KSI.
E. Roof Panels: Twin-vee panels, factory finished, thickness as required by engineering design, with minimum yield point of 28 KSI. Rib spacing as required by engineering design and manufacturer's standards.
F. Fasteners: Manufacturer's standards or as required by engineering design.
G. Concrete for Footings: As required by engineering design and in accord with Cast-In-Place Concrete.
H. Welds: E60 or E70 electrodes conforming to requirements of UBC Standard No. 27-6.

7. HARDWARE
A. Manufacturer's Standard.

8. HANDLING
A. Perform in manner to prevent bending, warping, denting, twisting or other damage.

9. PROTECTION OF MATERIALS
A. Protect components from damage when stored at the job site to prevent warps, bends, twists, or dents. Replace damaged components at no additional cost to Owner.

10. WORKMANSHIP
A. Use only skilled and experienced personnel.

11. ERECTION
A. Erect in accord with manufacturer's instructions and accepted shop drawings. Provide erection bracing, to assure adequate support for framing system until roof panels have been installed.

SECTION 10800 - TOILET ACCESSORIES

1. SECTION INCLUDES
A. Toilet Accessories
B. Installation Requirements

2. MANUFACTURER
A. The drawings were prepared, and portions of this specification written on the basis of using the products of Bobrick Washroom Equipment, Inc., North Hollywood, CA. It is not the intent to limit competitive bidding. Products with equal characteristics by other manufacturers are acceptable under the conditions of these specifications.
B. All bathroom fixtures and accessories shall comply with all federal, state, and local handicap accessibility code requirements.

3. ACCESSORIES
A. Deliver items in manufacturer's unopened protective cartons. Maintain covers on units until installation is complete.
B. Accessories
1. As scheduled on the drawings.

4. SEALANTS
A. Same as specified for exterior sealing in Section 079000 "Sealants and Caulking".

5. INSPECTION
A. Inspect blocking and plate inserts in framing to determine if material is in proper position for installation of accessories prior to wallboard surfacing being applied. Units securely attached to framing. Grab bars installed to withstand a 250 lb. loading condition; provide necessary concealed anchorage devices to meet load requirements.

6. INSTALLATION
A. Install items in accord with manufacturer's instructions, in locations shown on the drawings in cooperation with the work of other trades.
B. Remove protective covers at final clean-up of installation.

DIVISION 11 – EQUIPMENT

SECTION 11400 - FOOD SERVICE EQUIPMENT

1. SECTION INCLUDES
A. Installation of Owner provided food service equipment.
B. Equipment shall be furnished, assembled, and set in place under separate contract, with final utility connection by General Contractor.

2. RELATED SECTIONS
A. Mechanical and Electrical services and final connections to equipment.

3. OWNER / CONTRACTOR RESPONSIBILITIES
A. Owner will provide equipment manufacturer's installation instructions and Operation/Maintenance data for Contractor's use.
B. Coordinate size of access and route to place of installation.
C. Food Service Equipment (NIC):
1. Equipment scheduled on the drawings as (NIC).
2. Walk-in Coolers and Freezers with thermostats.
3. Motor starters.
D. Food Service Equipment (By Owner):
1. Equipment scheduled on the drawings as (B.O.).
2. Mechanical refrigeration systems, including compressor units, condensers, evaporator coils, and control valves.
3. Stainless steel trim strips, supports and connections, attachment devices, and accessories.
4. Exhaust Hood and Ansul system.
F. Refrigerant System Installation (By KES):
1. Refrigerant Lines: Type "L" hard copper tubing.
2. Fittings: Wrought copper or brass designed for use with high temperature solder.
3. Piping Joints: Made with silver solder (Sil-Fos).
4. Piping: Properly suspended from an anchor to the structure with adjustable hangers 6' o.c. maximum.
5. Suction Lines: Size to have maximum pressure drop of two pounds in medium temperature systems, one pound in low temperature system.
6. Liquid Lines: Sized to give maximum pressure to prevent trapping of oil. Rigid insulation on all suction lines to be Armaflex insulation by Armstrong - 1" thick at medium temp., 1-1/2" thick at low temp. Refrigerant lines in PVC or EMT conduit to be sealed at both ends with Dow Corning 3-6548 silicone RTV foam.
7. Evacuation and Charging: After completion of the pressure test, the system shall be evacuated using an approved auxiliary vacuum pump. Connections for evacuations to be in accordance with manufacturer's recommendations.

4. DELIVERY, HANDLING AND STORAGE
A. Delivery: Upon receiving equipment by Kitchen Equipment Supply vendor, check crates/cartons identification labels with receiving P.O.; assure correct item has been received.
B. Handling: Uncrate equipment in organized manner. Take care not to misplace loose parts, accessories, assembly and operating instructions, and warranty cars. Keep utility hookup notes and tags on equipment until after connections are made. Assemble in workmanship manner in accord with manufacturer's directions, taking care to make sure fasteners are tight and components are aligned and square.
C. Storage: Store equipment clear of floor in manner to prevent warping, twisting, or sagging.

5. INSTALLATION
A. Install items in accord with manufacturer's instructions and fabricator's shop drawings. Install in accord with local governing Health, Building, and Safety, and Fire Protection Codes and Regulations and NEMA, UL, AGA, ASME and NFPA.
B. Electrolysis: Insulate to prevent electrolysis between dissimilar metals. Provide sealant to achieve clean joint without crevices.
C. Equipment
1. General: Set in place and position per kitchen equipment plan; ready for utility hook up. After utility hookups are made, level and secure dishtables to slope toward dishwasher. Completely close and seal gaps, joints and seams between fixtures/equipment and walls, ceilings and floors with stainless steel trim strips and/or clear silicone sealant. Do not use sealant in joints or seams over 3/16 inch wide.
2. Refrigerant Piping: Install copper tubing and fittings. Cut with pipe cutters and reshape with sizing tool. Expose piping to view as required by American Standard Safety Code for Mechanical Refrigeration. For exposed areas or accessible furred ceiling spaces, use hard copper tubing. Run exposed tubing in such manner as to prevent damage from activities in areas; otherwise run tubing in pipe or conduit.
a. Suction Lines: Size to give max pressure drop from evaporator to machine of 2 lb. For high temp system and 1 lb. For freezer system, allowing gas velocities of not less than 750 rpm in horizontal runs and 1500 rpm in vertical risers. Size liquid lines to give max pressure drop of 3 lbs. from receiver to evaporator.
b. Tubing Runs: Grade to prevent trapping of oil.
c. Ties: Secure suction and liquid lines for each system together, except when run through conduit; 24 inch intervals with black plastic electrical tape.
d. Insulation: Insulate refrigerant suction lines outside of refrigerated compartments back to compressors.
e. Hangers and Supports: Provide adjustable hangers, anchors or straps required for proper support of piping not run in conduit. Space hangers not to exceed 10 feet o.c. and closer where required for proper support of small piping. Provide insulated refrigerant piping with approved type sleeves at hanger points.
3. Walk-In Cooler Freezer Boxes: Transit level floor screens prior to wall and ceiling panel erection. Seal wall and/or ceiling penetrations for electrical conduits and refrigeration lines, etc., to prevent frost and condensate build-up. Electrical conduits; on exterior of box.
4. Oil Separators: Provide low temperature operations of system, return line connected to top of crankcase above oil level. Provide exposed oil return lines with shut-off valves of packless stem type.
5. Evaporator Coils: Support by hangers utilizing fish plates on top of walk-in unit a full 4 inches clear from underside of ceiling panels.

DIVISION 15 – MECHANICAL AND PLUMBING

SECTION 15010 - MECHANICAL REQUIREMENTS

1. RELATED DOCUMENTS
A. Work herein shall conform to all applicable laws, ordinances, and to regulations of the local utility companies. The general conditions and all requirements of the contract documents shall apply to all work of this section. Work shall be in accordance with the requirements of the applicable building codes noted on the titlesheet of the drawings.
B. Cooperate with all other trades and install work as fast as the progress of the job will permit.
C. Use only mechanics skilled in the work they are to perform and have a competent representative on the job when any work is being done.
D. No work shall be done unless the Superintendent of the Contractor is on the job site. Work shall be properly protected, all rubbish removed promptly, and exposed work shall be carefully cleaned prior to final acceptance.
E. The term "provide" shall include labor, materials, and equipment necessary to furnish and install, complete and operable, the item or system indicated.
F. In decisions arising from discrepancies, interpretation of Drawings and Specifications, substitutes, and other pertinent matters, the decision of the Owner's representative's approval shall be final.
G. Each Contractor shall be responsible for all work of every description in connection with his contract. He shall specifically and distinctly assume, and does so assume, all risk for damage or injury from whatever cause to property or person used or employee on or in connection with his work and of all damage or injury to any persons or property wherever located, resulting from any action or operation under the contract or in connection with the work, and undertake the promise to defend the Owner and design consultants against all claims on account of any such damage or injury.
H. Each Contractor will be held responsible for the execution of a satisfactory and complete piece of work, in accordance with the true intent of the drawings and specification and all bulletins and addenda, which may be issued during the time of bidding. He shall provide, without extra charge, all incidental items required as part of his work, even though not particularly specified or indicated, and if he has good reason for objecting to the use of any materials, appliance or method if construction as shown or specified, he shall make report of such objections to the Construction Manager, and obtain proper adjustment before the Contract is made, and shall proceed with the work, only with the understanding that a satisfactory job is required.

2. SPECIFICATIONS AND DRAWINGS
A. The interrelation of the specifications, drawings and schedules shall be as previously described in the Architectural Sections of the Specifications.
B. Should the drawings disagree in themselves, or with the specifications, contact the Construction Manager.
C. The "Scope of Work" as previously stated is intended to designate the general description of the work, which shall be performed by each of the major contractors. It is not intended to include all items of work, either generally or specifically, nor is it intended to limit the scope of the work where plans, schedules, notes or standard practice requires the inclusion of other specific items.
D. When the drawings do not give exact details as to the elevations of ducts, the contractors shall physically arrange the systems to fit in the space available at the elevations intended with the proper grades for the functioning of the systems involved. Piping, exposed conduit and the duct systems are generally intended to be installed true and square to the building construction, and located as high as possible against the structure in a neat and workmanlike manner. Work shall be concealed in all finished areas except as shown

3. PERMITS, FEES AND INSPECTIONS:
A. The Contractor shall give all necessary notices, obtain all permits and pay all government fees, sales taxes and other costs, including utility connections or extensions, in connection with this work; file all permit applications required by all governmental departments having jurisdiction.
B. Obtain all required certificates of inspection for work and deliver them to the Owner before requesting acceptance and final payment for the work.
C. The Contractor shall include in the work, without extra cost to the Owner, any labor, materials, services, apparatus and drawings required to comply with all applicable laws, ordinances, rules and regulations.
D. The Contractor shall inform the Owner of any work or materials which conflict with any of the applicable codes, standards, laws and regulations before submitting his bid.
E. The purpose of the final inspection is to determine whether the Contractor has completed the work in a proper and workmanlike manner, that he has apparently installed the work in accordance with the intent of the drawings and specifications and that, in the Owner's opinion, the work is satisfactory for acceptance.
F. It shall be the duty of each Contractor to personally make a special inspection trip as a whole, assuring himself that the work on the project is ready for final acceptance before calling for a final inspection.
G. Before making the final inspection, the Owner must have received the following documents or evidence that they will be available at the time of inspection:
1. Certificates of acceptance from local inspecting authorities.
2. The letter of compliance from the Mechanical Contractors.
3. All data called for in the "Records for Owner" article of this section of the specifications.

4. GENERAL
A. Materials or products specified herein and/or indicated on drawings by trade name, manufacturer's name and/or catalog number shall be provided as specified. Substitutions will not be permitted except as described herein and in the Supplementary and General Conditions.
B. Since manufacturers reserve the right to change their products at any time, contractors shall verify all dimensions, performance data, etc. for each piece of equipment submitted to assure compliance with the intent of the drawings and specifications.
C. All materials shall be new and of quality as specified, and when required, be clearly labeled and/or stamped as manufactured in the United States.
D. For acceptance of products or manufacturers other than those specified, bidders shall submit to the Architect/Engineer a request in writing at least ten (10) days prior to bid date and hour. Requests shall clearly define and describe the product for which approval is requested. Requests shall be accompanied by manufacturer's literature, specifications, drawings, cuts, performance data list of references or other information necessary to completely describe the item.
E. A list of all materials and equipment which the Contractor proposes to furnish shall be submitted for approval within ten (10) days after the contract has been awarded.
F. Where an accepted substitution or deviation requires different quantity or arrangement of foundations, supports, ductwork, piping, wiring, conduit, and any other equipment or accessories normal to this equipment, contractor shall furnish said changes and additions and pay all costs for all changes and additions to his work and the work of others affected by this substitution or deviation.

5. SHOP AND ERECTION DRAWINGS AND SAMPLES
A. The Owner's approval shall be obtained for all equipment and material before delivery to the job site. Delivery, storage or installation of equipment or material which has not had prior approval will not be permitted at the job site. Submittals shall be made for all equipment and systems as indicated in the respective specification section.
B. All submittals shall include adequate descriptive literature, catalog cuts, shop drawings and other data necessary for the Owner to ascertain that the proposed equipment and materials comply with specification and drawing requirements. Catalog cuts submitted for approval shall be legible and clearly identify equipment being submitted.
C. Shop and erection drawing submittals shall conform to the requirements of the General Conditions and Division-1 specifications except as modified herein.
D. Submit required and/or requested shop and erection drawings, for review by the Owner before ordering or installing any equipment or material.
E. Shop drawings shall consist of manufacturer's scale drawings, cuts or catalogs, including descriptive literature which shall clearly indicate the construction, material, physical dimensions, wiring diagrams and complete operating data clearly marked for each item.
F. Make submittals for the equipment and materials in accordance with the following:
1. Submittals shall be marked to show specification reference including the section and paragraph numbers.
2. The submittals shall include the following:
a. Information that confirms compliance with contract requirements. Include the manufacturer's name, model or catalog numbers, catalog information, technical data sheets, shop drawings, pictures, nameplate data and test reports as required. Provide any additional information specifically requested in the individual specification section or on the drawings.
G. The General Contractor will certify that all shop drawings are in conformance with the plans and specifications. Deviations from the plans and specifications shall be noted, and the specific area of the deviation clouded and in contrasting color with a complete explanation for the reasons for the deviation. Any redesign of the system shall be Certified by a Professional Engineer currently registered in the state.
H. The engineer's review shall not relieve the contractor from the responsibility for deviations from drawings and specifications. The engineer's review shall be construed to apply only to general arrangement and shall not relieve the contractor from the responsibility for the correctness of details and dimensions and provision of the correct equipment.

6. COORDINATION WITH OTHER TRADES
A. Contractor shall coordinate his work with other trades to avoid interferences and delays. He shall assist in working out space requirements to make a satisfactory installation.

ARCHITECT:

DAVID SCOTT WINDLE, AIA

6201 CAMPUS CIRCLE DRIVE E.
IRVING, TEXAS 75038
TEL: 972.870.1288
WWW.IDSTUDIO4.COM
E-MAIL scottw@idstudio4.com

CORPORATE:
BRINKER RESTAURANT CORPORATION,
A VIRGINIA CORPORATION
3000 OLYMPUS BLVD.
DALLAS, TEXAS 75019
972.980.9917
www.brinker.com

09/23/2024
ISSUE FOR BID
THESE DOCUMENTS ARE FOR BIDDING PURPOSES ONLY. DO NOT USE FOR CONSTRUCTION.

RESTAURANT #CH1679
PROTOTYPE 18.5FS

CHILI'S TOOELE
951 N MAIN STREET
TOOELE, UT 84074

CLIENT: BRINKER RESTAURANT CORP.
A VIRGINIA CORPORATION

DATE	DESCRIPTION
6/27/2024	ISSUE FOR PERMIT
9/23/2024	ISSUE FOR BID

△	DATE	DESCRIPTION

PROJECT NUMBER:
CHI24007

SHEET TITLE:
SPECIFICATIONS
09900 - 15010

SHEET NUMBER:
SP110

B. If the Contractor installs his work before coordinating with other trades, or so as to cause any interference with the work of other trades, he shall make the necessary changes in his work to correct the condition without extra charge.
C. The Contractor shall furnish to other trades, as required, all necessary templates, patterns, setting plans, and shop details for the proper installation of work and for the purpose of coordinating adjacent work.

7. EQUIPMENT IDENTIFICATION
A. Each unit shall be identified by its system number and other appropriate designation by the attachment of nameplates constructed from laminated phenolic engraved plastic, 3 ply, with black surface and white interior core, at least 1/16 inch thick. Engraved lettering shall be condensed gothic, at least 1/4 inch high and properly spaced for easy and legible reading. Plates shall be attached to equipment by the use of a permanent type adhesive or chromium plated screws Embossed plastic tape or hand lettering is not acceptable. Equipment requiring identification shall include: supply and exhaust fans, air conditioning and heating machinery and apparatus, control cabinets, and other equipment units as may be directed by the owner.

8. CUTTING, PATCHING, EXCAVATION, BACKFILL, AND LAYOUT
A. Provide openings and excavation required for the installation of the work. Patch work and backfill as required. Finished work shall match the existing adjoining work.
B. Verify all conditions affecting the work to be performed under this contract.
C. Carefully verify measurements at the site, determine the exact locations of chases and openings required. Provide sleeves, inserts, and hangers as required. No columns, beams, joists, building foundations nor any other structural building component shall be cut, drilled or disturbed in any way. Conflicts shall immediately be brought to the attention of the Owner's construction manager.
D. All excavation on sites containing existing buildings and existing services, shall be done with hand shovel to avoid damage to existing services. Any damage incurred by the Contractor shall be repaired by the Contractor in a manner approved by the Owner at no cost and with no extension of time limitation.

9. EXPERIENCE
A. The Contractor performing this work shall be a licensed, reputable firm, regularly performing the type of work incorporated in this project and who also maintains, as part of the firm, a service department with qualified personnel who regularly perform this type of work.

10. ELECTRICAL WORK FOR MECHANICAL SYSTEMS
A. Controllers, and control equipment necessary for mechanical equipment operation shall be provided under Division 15 Mechanical. Starters not integral with mechanical equipment and starters mounted in motor control centers shall be provided under Division 16 Electrical.
B. Power wiring for motors and installation of starters shall be provided under Division 16 Electrical.
C. Temperature, humidity, pressure and similar controls essential to the operation of mechanical systems, and wiring and conduit thereof, including interlock wiring, shall be provided under Division 15 of Specifications, installed in accordance with requirements of Division 16.
D. Motors shall be provided under Division 15 Mechanical of capacity required to operate equipment specified, but shall not be less than that specified.
E. All low voltage (120V and under) temperature control wiring for equipment shall be provided under this division.
F. Conduit when required for control wiring shall be provided under this division.

11. MOTORS
A. All motors shall be furnished and installed under Division 15 Mechanical and shall be wired under Division 16 Electrical.
B. All motors shall be built in accordance with the current applicable IEEE, ASA, and NEMA standards. All general purpose motors shall be open drip-proof machines for installation indoors and/or in protected locations. Totally enclosed fan cooled (TEFC) motors shall be used in all areas of exposure to weather or other environmental contamination. Motors shall be rated explosion proof when located in hazardous atmospheres. Type II weather protected motors may be used in lieu of TEFC motors on roof mounted fan units and similar equipment.
C. If the Contractor proposes to furnish motors varying in horsepower and/or characteristics from those specified, he shall first inform the Owner of the change and shall then coordinate the change and shall pay all additional charges in connection with the change.

12. REMOVAL OF RUBBISH
A. Contractor shall keep premises free from accumulations of waste material or rubbish caused by his employees or work. At completion of work, he shall remove all his tools, scaffolding, surplus materials, and rubbish from building and site. He shall leave premises and his work in a clean orderly condition acceptable to the Owner.

13. QUIET OPERATION AND VIBRATION
A. All equipment provided under this section shall operate under all conditions of load free of objectionable sound and vibration. Sound and vibration conditions considered objectionable shall be corrected in an approved manner.
B. Vibration and sound control shall be by means of approved vibration eliminators or sound attenuators as specified and as recommended by the manufacturer.

14. EXAMINATION OF EXISTING CONDITIONS
A. Visit and carefully examine those portions of the site and/or present buildings affected by this work so as to become familiar with existing conditions and difficulties that will affect the execution of the work before submitting proposals.
B. Submission of a proposal will be construed as evidence that such examination has been made and later claims for labor, equipment or materials required because of difficulties encountered, which could have been foreseen had such examination been made, will not be recognized.

15. CLEANING AND ADJUSTMENTS
A. Upon completion of work, Contractor shall clean and lubricate fans, motors, and other running equipment and apparatus which he has installed and make certain such apparatus and mechanisms are in proper working order and ready to test.
B. Scratched or damaged painting shall be touched up as necessary to return the painting to "new" condition and appearance.
C. All piping and equipment shall be thoroughly blown out under pressure and cleared of all foreign matter, wasting air, gas or water through temporary connections as long as necessary to thoroughly clean system before system is placed in operation. Use every precaution to prevent pipe compound, scale, dirt, welding and other objectionable matter from getting into the piping system and equipment.
D. During blow out period, baskets from strainers shall be removed, traps and control valves, etc., shall be by-passed.
E. All cleaning shall be done prior to any sterilization, pressure testing, flow balancing or equipment adjustment procedures.

16. DEMOLITION (where required)
A. Demolition shall be as shown on drawings or specified.
B. Schedule all demolition work with Owner to cause minimum downtime of any building service or function. No extra cost to the contract will be allowed for overtime work unless specifically authorized in advance by representative of Owner in writing.
C. Remove with care and deliver to a location designated by representative of the Owner all items designated to remain the property of the Owner.
D. Drawings are diagrammatic and shown only major obstructions; coordinate with other trades for removal or relocation of pipes; conduits, hangers, etc. in path of work.
E. No columns, beams, joists, building foundations nor any other structural building component shall be cut, drilled or disturbed in any way. Conflicts shall immediately be brought to the attention of the Architect/Engineer. Contractor shall not proceed until instructed in writing by the Architect/Engineer if conflicts between mechanical work and structural elements occur.

17. CLEANING AND PROTECTING
A. During construction protect all piping and equipment from damage and dirt. Cap the open ends of all piping and equipment.
B. After completion of project clean the exterior surface of equipment included in this section, remove all concrete residues and as directed touch up paint or completely repaint all damaged surfaces.

18. STORAGE OF MATERIALS
A. All materials stored on site shall be properly protected from injury or deterioration. Materials shall not be stored in contact with ground or floor.
B. Do not remove manufacturer's packing materials until ready to install. Materials showing signs of corrosion, improper handling or storage shall be replaced at no cost to the Owner.
C. Provide continuous protection for all equipment already installed.

19. WATERPROOFING
A. Where any work pierces waterproofing including waterproof concrete, the method of installation shall be as approved by the Owner before the work is done.
B. Provide all necessary sleeves, caulking and flashing required to make openings absolutely watertight. Waterproof flashing materials shall be compatible with base materials.

20. TESTS
A. Contractor shall make all tests required to establish the adequacy, quality, safety, completed status and satisfactory operation of all systems to the satisfaction of the Owner. Provide all instruments, labor and services necessary to conduct tests.

21. GUARANTEE
A. All materials, equipment and workmanship shall be guaranteed for a period of one year from the date of final completion and acceptance of this project, except that where specific equipment is noted to have extended guarantees, the Contractor shall be responsible for the proper registration of these guarantees so that the Owner can make all proper claims should future need develop. All work found to be defective shall be repaired or replaced by the Contractor without any charge to the Owner.

22. ACCEPTANCE
A. Before requesting final inspection:
1. Complete all work required. If any items are held in abeyance as incomplete for final inspection, list such items together with explanation for delay.
2. Submit statement that equipment is properly installed, adjusted, fully lubricated and operation is satisfactory.
3. Certify in writing to the Architect/Engineer that the Owner's representative has been instructed as to the care and operation of the system and that catalog service and maintenance information has been turned over to the Owner.
4. Submit copy of written guarantee.
5. Submit copy of other data as may be outlined in these specifications.
B. Copies of the above data shall be submitted to the Owner's construction manager prior to requesting final inspection.

SECTION 15060 - PIPES AND PIPE FITTINGS

1. RELATED DOCUMENTS
A. Drawings and general provisions of Contract, including General and Supplementary Conditions and Division 1 Specification sections, apply to work of this section.
B. This section is a Division 15 Basic Mechanical Materials and Methods section, and is part of each Division 15 section making reference to pipes and pipe fittings specified herein.

2. DESCRIPTION OF WORK
A. Extent of pipes and pipe fittings required by this section is indicated on drawings and/or specified in other Division 15 sections.
B. Type of pipes and pipe fittings specified in this section include the following:
1. Steel Pipes.
2. Copper Tube.
3. Cast-Iron Soil Pipes.
4. Plastic Pipes - DWV.
5. Plastic Pipes - Potable Water.
6. Miscellaneous Piping Materials/Products.
C. Pipes and pipe fittings furnished as part of factory-fabricated equipment, are specified as part of equipment assembly in other Division 15 sections.

3. SUBMITTALS
A. Product Data: Submit manufacturer's technical product data, installation instructions, and dimensioned drawings for each type of pipe and pipe fitting. Submit piping schedule showing manufacturer, pipe or tube weight, fitting type, and joint type for each piping system.

4. GENERAL
A. Piping Materials: Provide pipe and tube of type, joint type, grade, size and weight (wall thickness or Class) indicated for each service. Where type, grade or class is not indicated, provide proper selection as determined by Installer for installation requirements, and comply with governing regulations and industry standards.
B. Pipe/Tube Fittings: Provide factory-fabricated fittings of type, materials, grade, class and pressure rating indicated for each service and pipe size. Provide sizes and types matching pipe, tube, valve or equipment connection in each case. Where not otherwise indicated, comply with governing regulations and industry standards for selections, and with pipe manufacturer's recommendations where applicable.

5. STEEL PIPES AND PIPE FITTINGS
A. Black Steel Pipe: ASTM A53, A106 or A120; except comply with ASTM A53 or A106 where close coiling or bending is required.
B. Galvanized Steel Pipe: ASTM A53 or A120; except comply with ASTM A53 where close coiling or bending is required.
C. Pipe Nipples: Fabricated from same pipe as used for connected pipe; except do not use less than Schedule 80 pipe where length remaining unthreaded is less than 1-1/2", and where pipe size is less than 1-1/2", and do not thread nipples full length (no close-nipples).

6. COPPER TUBE AND FITTINGS
A. Copper Tube: Above grade shall be Type "L" hard drawn, seamless copper water tube conforming to ASTM B88, joined with wrought copper sweat type fittings conforming to ANSI B16.22. Where soldered copper piping is connected to threaded brass piping, a cast brass adapter shall be used.Below grade shall be 'K' seamless copper water tube conforming to ASTM B88 installed so that no joints are made below the floor line.
B. Cast-Copper Solder-Joint Fittings: ANSI B16.18.
C. Wrought-Copper Solder-Joint Fittings: ANSI B16.22.
D. Copper-Tube Unions: Provide standard products recommended by manufacturer for use in service indicated.

7. DWV PIPING
A. Soil waste and vent sanitary drainage lines and storm drainage lines shall be solid core PVC complying with ASTM D2665 unless otherwise shown on plans or when project has elevated slab. (Weight of PVC pipe shall be as required by code for location and duty.) Schedule 40 shall be a minimum. Use solvent cement complying with ASTM D2235 and with pipe manufacturer's recommendations.
B. In jurisdictions not allowing PVC or when project has an elevated slab, lines shall be cast iron soil pipe and fittings, coated inside and outside, manufactured in accordance with ASTM A-74 and ASTMM A888, and shall be labeled with the Cast Iron Soil Pipe Institutes "Mark of Quality and Permanence". Joints shall be fabricated by the use of "Push-on" type gasket joints (ASTM C564) below grade and "No-Hub" mechanical joints (ASTM C1277) above grade.

8. PLASTIC PIPES AND PIPE FITTINGS – POTABLE WATER PIPING
A. All PEX tubing, fittings, and other components shall be from a single manufacturer or as required to comply with warranty. Warranty shall be a minimum of 25 years for PEX system or as otherwise approved in writing by owner.
B. Pex Distribution System: ASTM F 877, SDR 9 tubing, by a single manufacturer with a minimum of 10 years documented experience offering similar PEX piping and tubing products. Tubing shall also comply with ASTM 2023 for use with chlorinated water.
C. Fittings for PEX Tube: ASTM F 1807 or F 1960, brass insert type with copper crimp rings and matching PEX tube dimensions, by a single manufacturer with a minimum of 10 years documented experience offering similar PEX fittings products.
D. Joining Materials: Type and material recommended by piping system manufacturer unless otherwise indicated.
E. Minimize exposure to ultra-violet (UV) light by storing out of direct sunlight.

9. GAS PIPING
A. Gas piping within the building and exterior above grade shall be Schedule 40 black steel pipe (ASTM A53) with malleable iron 150# beaded pattern screwed fittings (ASME B16.3) (2" pipe and smaller) and butt-welding or socket-welding fittings (ASTM A234) (2-1/2" pipe and larger).
B. Equipment connections shall be made with ground-joint unions, and shall be provided with individual gas cocks. Install unions between gas cocks and equipment
C. Provide protective wrapping for underground piping.
D. Provide dirt legs at end of roof top and water heater gas line connections.

10. MISCELLANEOUS PIPING MATERIALS/PRODUCTS
A. Soldering Materials: Except as otherwise indicated, provide soldering materials as determined by Installer to comply with installation requirements.
B. Tin-Lead Solder: ASTM B32, Grade 50A.
C. Tin-Antimony Solder: ASTM B32, Grade 95TA.
D. Silver-Lead Solder: ASTM B32, Grade 96TS.
E. Piping Connectors for Dissimilar Non-Pressure Pipe: Elastomeric annular ring insert, or elastomeric flexible coupling secured at each end with stainless steel clamps, sized for exact fit to pipe ends and subject to approval by plumbing code.

11. INSTALLATION:
A. General: Install pipes and pipe fittings in accordance with recognized industry practices which will achieve permanently-leakproof piping systems, capable of performing each indicated service without piping failure. Install each run with minimum joints and couplings, but with adequate and accessible unions for disassembly and maintenance/replacement of valves and equipment. Reduce sizes (where indicated) by use of reducing fittings. Align piping accurately at connections, within 1/16" misalignment tolerance.
B. Comply with ANSI B31 Code for Pressure Piping.
C. Locate piping runs, except as otherwise indicated, vertically and horizontally (pitched to drain) and avoid diagonal runs wherever possible. Orient horizontal runs parallel with walls and column lines. Locate runs as shown or described by diagrams, details and notations or, if not otherwise indicated, run piping in shortest route which does not obstruct usable space or block access for servicing building and its equipment. Hold piping close to walls, overhead construction, columns and other structural and permanent-enclosure elements of building; limit clearance to 1/2" where furring is shown for enclosure or concealment of piping, but allow for insulation thickness, if any. Where possible, locate insulated piping for 1" clearance outside insulation. Wherever possible in finished and occupied spaces, conceal piping from view, by locating in column enclosures, in hollow wall construction or above suspended ceilings; do not encase horizontal runs in solid partitions, except as indicated.
D. Electrical Equipment Spaces: Do not run piping through transformer vaults and other electrical or electronic equipment spaces and enclosures.

12. PIPING SYSTEM JOINTS:
A. General: Provide joints of type indicated in each piping system.
B. Thread pipe in accordance with ANSI B2.1.
C. Solder copper tube-and fitting joints where indicated, in accordance with recognized industry practice.

13. CLEANING, FLUSHING, INSPECTING:
A. General: Clean exterior surfaces of installed piping systems of superfluous materials, and prepare for application of specified coatings (if any). Flush out piping systems with clean water before proceeding with required tests. Inspect each run of each system for completion of joints, supports and accessory items.
B. Disinfect water mains and water service piping in accordance with AWWA C601.

14. PIPING TESTS:
A. General: Provide temporary equipment for testing, including pump and gages. Test piping system before insulation is installed wherever feasible, and remove control devices before testing. Test each natural section of each piping system independently but do not use piping system valves to isolate sections where test pressure exceeds valve pressure rating. Fill each section with water and pressurize for indicated pressure and time.
B. Required test period is 2 hours.
C. Test each piping system at 150% of operating pressure indicated, but not less than 25 psi test pressure.
D. Observe each test section for leakage at end of test period. Test fails if leakage is observed or if pressure drop exceeds 5% of test pressure.
E. Repair piping systems sections with fail required piping test, by disassembly and re-installation, using new materials to extent required to overcome leakage. Do not use chemicals, stop-leak compounds, mastics, or other temporary repair methods.
F. Drain test water from piping systems after testing and repair work has been completed.
G. Gas piping tests
1. All gas piping systems shall be tested either in sections or in their entirety in accordance with all the requirements of the local Plumbing Code and to the satisfaction of the local Plumbing Inspector. These tests shall be examined if desired by the Architect or his representative during the test period and ample notice of performance of these tests shall be given.
2. All natural gas piping systems on the "house" side of the meters and regulators shall be tested to a pressure of 50 psig and shall be held at this pressure for a period of eight hours.
3. Protect connected equipment during the tests. Repair all leaks.

15. INSTALLATION OF ELECTRIC HEAT TAPE:
A. Division 16 shall furnish and install electric heat tape (where piping is subjected to freezing conditions) per manufacturer's direction. Division 15 shall install 1" insulation (min.).

SECTION 15100 – VALVES

1. RELATED DOCUMENTS
A. Drawings and general provisions of Contract, including General Conditions and Division 1 Specification sections, apply to work of this section.
B. This section is a Division 15 Basic Mechanical Materials and Methods section, and is part of each Division 15 section making reference to valves specified herein.

2. DESCRIPTION OF WORK
A. Extent of valves required by this section is indicated on drawings and/or specified in other Division 15 sections.
B. Provide labor, materials, equipment, tools and services, and perform operations required for, and reasonably incidental to, the providing of valves.
C. Valves furnished as part of factory-fabricated equipment, are specified as part of equipment in other Division 15 sections.

3. QUALITY ASSURANCE
A. Valve Types: Provide valves of same type by same manufacturer.
B. Valve Identification: Provide valves with manufacturer's name (or trademark) and pressure rating clearly marked on valve body.

4. CODES AND STANDARDS
A. ANSI Compliance: For face-to-face and end-to-end dimensions of flanged- or welded-end valve bodies, comply with ANSI B16.10 "Face-to-Face and End-to-End Dimensions of Ferrous Valves".

5. WATER VALVES
A. Domestic Water Systems: Provide valves, where shown on the Drawings and elsewhere as specified or required, to provide isolation of equipment and fixtures and to provide drainage of low points in water lines. Valves shall comply with NSF 61 and be in accordance with the following detailed specifications:
1. Sizes 2-1/2" and smaller:
a. Gate Valve: 125#, Crane Co. #428 BB, screwed.
b. Globe Valve: 300#, Crane Co. #7 BB, union bonnet.
c. Check Valve: 125#, Crane Co. #34 BB, screwed.
d. Ball Valve: Nibco 585-70.

6. GAS PIPING SYSTEMS
A. Provide gas cocks where shown on the Drawings and elsewhere as specified or required to provide isolation of equipment and to comply with NFPA Standards and requirements of governing authorities. Gas cocks shall be in accordance with the following detailed specifications:
1. 1/4" - 1": Crane #289.
2. 1-1/4" - 2": Crane #272.
3. 2-1/2" - 4": Crane #324.

7. PRESSURE AND TEMPERATURE RELIEF VALVES
A. Provide pressure and temperature relief valves at each domestic water heater.
B. Pressure and temperature relief valves shall be similar and equal to Watts, with automatic re-closing, and shall be ASME rated for the load at each location.
C. Provide a drain line from the relief connection on each valve to the nearest drain as shown on the Drawings, or as indicated.

8. DRAIN VALVES
A. Comply with the following standards:
1. Water Heater Drain Valves: ASSE 1005.

9. PLUG VALVES
A. Manufacturer: Subject to compliance with requirements.

10. BALL VALVES
A. Comply with the following standards:
1. Cast-Iron Valves: MSS SP-72.
2. Steel Valves: ANSI B16.34.

11. SWING CHECK VALVES
A. Comply with the following standards:
1. Cast-Iron Valves: MSS SP-71.
2. Bronze Valves: MSS SP-80
3. Steel Valves: ANSI B16.34.

12. VALVE FEATURES
A. General: Provide valves with features indicated and, where not other indicated, provide proper valve features as determined by Installer for installation requirements. Comply with ASME B31.9 for building services piping, and ASME B31.1 for power piping.
B. Bypass: Comply with MSS SP-45, and except as otherwise indicated, provide manufacturer's standard bypass piping and valving.
C. Drain: Comply with MSS SP-45, and provide threaded pipe plugs.
D. Flanged: Valve flanges complying with ANSI B16.1 (cast iron), ANSI B16.5, (steel), or ANSI B16.24 (bronze).
E. Threaded: Valve ends complying with ANSI B2.1.
F. Solder-Joint: Valve ends comply with ANSI B16.18.

13. INSTALLATION
A. Valves shall be installed in accordance with the manufacturers' recommendations, and in such manner as to permit disassembly, removal, reassembly and replacement.
B. Provide "full open" valve at domestic water service in Mechanical Room, at each water heater and at all main branches. Provide shut off valves (water and gas) at each fixture, appliance and piece of equipment.

14. INSTALLATION OF CHECK VALVES
A. Swing Check Valves: Install in horizontal position with hinge pin horizontally perpendicular to center line of pipe. Install for proper direction of flow.

15. ADJUSTING AND CLEANING
A. Valve Adjustment: After piping systems have been tested and put into service, but before final testing, adjusting, and balancing, inspect each valve for possible leaks. Adjust or replace packing to stop leaks, replace valve if leak persists.
B. Valve Identification: Tag each valve in accordance with Division 15 section "Mechanical Identification".
C. Cleaning: Clean factory-finished surfaces. Repair any marred or scratched surfaces with manufacturer's touch-up paint.

SECTION 15120 - PIPING SPECIALTIES

1. RELATED DOCUMENTS
A. Drawings and general provisions of Contract, including General and Supplementary Conditions and Division-1 Specification sections, apply to work of this section.
B. This section is Division-15 Basic Mechanical Materials and Methods section, and is part of each Division-15 section making reference to piping specialties specified herein.

2. DESCRIPTION OF WORK
A. Extent of piping specialties work required by this section is indicated on drawings and schedules and by requirements of this section.
B. Types of piping specialties specified in this section include the following:
1. Pipe Escutcheons
2. Pipeline Strainers
3. Dielectric Unions
4. Mechanical Sleeve Seals
5. Fire Barrier Penetration Seals
6. Water Hammer Arresters
7. Drip Pans
8. Pipe Sleeves
9. Sleeve Seals
C. Piping specialties furnished as part of factory-fabricated equipment, are specified as part of equipment assembly in other Division-15 sections.

3. CODES AND STANDARDS
A. FCI Compliance: Test and rate "Y" type strainers in accordance with FCI 73-1 "Pressure Rating Standard for "Y" Type Strainers". Test and rate other type strainers in accordance with FCI 78-1 "Pressure Rating Standard for Pipeline Strainers Other than "Y" Type".

4. SUBMITTALS
A. Product Data: Submit manufacturer's technical product data, including installation instructions, and dimensioned drawings for each type of manufactured piping specialty. Include pressure drop curve or chart for each type and size of pipeline strainer. Submit schedule showing manufacturer's figure number, size, location, and features for each required piping specialty.

5. PIPING SPECIALTIES
A. General: Provide factory-fabricated piping specialties recommended by manufacturer for use in service indicated. Provide piping specialties of types and pressure ratings indicated for each service, or if not indicated, provide proper selection as determined by Installer to comply with installation requirements. Provide sizes as indicated, and connections, which properly mate with pipe, tube, and equipment connections. Where more than one type is indicated, selection is Installer's option.

6. FABRICATED PIPING SPECIALTIES
A. Drip Pans: Provide drip pans fabricated from corrosion-resistant sheet metal with watertight joints, and with edges turned up 2-1/2". Reinforce top, either by structural angles or by rolling top over 1/4" steel rod. Provide hole, gasket, and flange at low point for watertight joint and 1" drain line connection.
B. Pipe Sleeves: Provide pipe sleeves of one of the following:
1. Sheet Metal: Fabricate from galvanized sheet metal; round tube closed with snaplock joint, welded spiral seams, or welded longitudinal joint. Fabricated from the following gages: 3" and smaller, 20 gage; 4" to 6" 16 gage; over 6", 14 gage.
2. Steel-Pipe: Fabricate from Schedule 40 galvanized steel pipe; remove burrs.
3. Iron-Pipe: Fabricate from cast-iron or ductile-iron pipe; remove burrs.
4. Plastic-Pipe: Fabricate from Schedule 80 PVC plastic pipe; remove burrs.
C. Sleeve Seals: Provide sleeve seals for sleeves located in foundation walls below grade, or in exterior walls, of one of the following:
1. Lead and Oakum: Caulked between sleeve and pipe.
2. Mechanical Sleeve Seals: Installed between sleeve and pipe.

7. INSTALLATION OF PIPING SPECIALTIES
A. Pipe Escutcheons: Install pipe escutcheons on each pipe penetration thru floors, walls, partitions, and ceilings where penetration is exposed to view; and on exterior of building. Secure escutcheon to pipe or insulation so escutcheon covers penetration hole, and is flush with adjoining surface.
B. Y-Type Strainers: Install Y-type strainers full size of pipeline, in accordance with manufacturer's installation instructions.Install pipe nipple and shutoff valve in strainer blow down connection, full size of connection, except for strainers 2" and smaller installed ahead of control valves feeding individual terminals. Where indicated, provide drain line from shutoff valve to plumbing drain, full size of blow down connection.
C. Locate Y-type strainers in supply line ahead of the following equipment, and elsewhere as indicated, if integral strainer is not included in equipment:
1. Pumps
2. Steam traps serving steam main drips
3. Temperature control valves
4. Pressure reducing valves
5. Temperature or pressure regulating valves
D. Dielectric Unions: Install at each piping joint between ferrous and non-ferrous piping. Comply with manufacturer's installation instructions.
E. Mechanical Sleeve Seals: Loosely assemble rubber links around pipe with bolts and pressure plates located under each bolt head and nut. Push into sleeve and center. Tighten bolts until links have expanded to form watertight seal.
F. Fire Barrier Penetration Seals: Fill entire opening with sealing compound. Adhere to manufacturer's installation instructions.
G. Water Hammer Arresters: Install in upright position, in locations and of sizes in accordance with PDI Standard WH-201, and elsewhere as indicated.

8. INSTALLATION OF FABRICATED PIPING SPECIALTIES
A. Drip Pans: Hang from structure with rods and building attachments, weld rods to sides of drip pan. Brace to prevent sagging or swaying. Connect 1" drain line to drain connection, and run to nearest plumbing drain or elsewhere as indicated.
B. Pipe Sleeves: Install pipe sleeves of types indicated where piping passes through walls, floors, ceilings, and roofs. Do not install sleeves through structural members of work, except as detailed on drawings, or as reviewed by Architect/Engineer. Install sleeves accurately centered on pipe runs. Size sleeves so that piping and insulation (if any) will move freely in sleeve, including allowance for thermal expansion; but not less than 2 pipe sizes larger than piping run. Where insulation includes vapor-barrier jacket, provide sleeve with sufficient clearance for installation. Install length of sleeve equal to thickness of construction penetrated, and finish flush to surface; except floor sleeves. Extend floor sleeves 1/4" above level floor finish, and 3/4" above floor finish sloped to drain. Provide temporary support of sleeves during placement of concrete and other work around sleeves, and provide temporary closure to prevent concrete and other materials from entering sleeves:
1. Install sheet-metal sleeves at interior partitions and ceilings other than suspended ceilings.
2. Install iron-pipe sleeves at exterior penetrations; both above and below grade.
3. Install steel-pipe or plastic-pipe sleeves except as otherwise indicated.
C. Sleeve Seals: Install in accordance with the following:
1. Lead and Oakum: Fill and pack annular space between sleeve and pipe with oakum, caulk with lead, on both sides.

9. INSTALLATION OF ACCESS PANELS AND DOORS
A. Refer to the architectural specifications for additional access panel and access door requirements.
B. Provide wall and ceiling access doors for unrestricted access to concealed valves, dampers and other mechanical equipment items and devices.
C. Access doors mounted in surfaces to be painted shall be prime coated. Provide "K" for plastered surfaces and Style "M" for non-plastered surfaces. Style "K" doors shall be set with door flush with adjacent surfaces. Access doors mounted on tile surfaces and FRP shall be stainless steel and of similar construction to that described above. Access doors shall be not less than 12" x 12" in size.

SECTION 15140 - SUPPORTS AND ANCHORS

1. RELATED DOCUMENTS
A. Drawings and general provisions of Contract, including General and Supplementary Conditions and Division-1 Specification sections, apply to work of this section.
B. This section is Division-15 Basic Mechanical Materials and Methods section, and is part of each Division-15 section making reference to supports and anchors specified herein.

2. DESCRIPTION OF WORK
A. Extent of supports and anchors required by this section is indicated on drawings and/or specified in other Division-15 sections.
B. Types of supports and anchors specified in this section include the following:
1. Horizontal-Piping Hangers and Supports.
2. Vertical-Piping Clamps.
3. Hanger-Rod Attachments.
4. Building Attachments.
5. Saddles and Shields.
6. Miscellaneous Materials.
7. Roof Equipment Supports.
8. Anchors.
9. Equipment Supports.
C. Supports and anchors furnished as part of factory-fabricated equipment, are specified as part of equipment assembly in other Division-15 sections.

3. QUALITY ASSURANCE
A. Codes and Standards:
1. Code Compliance: Comply with applicable plumbing codes pertaining to product materials and installation of supports and anchors.
2. UL and FM Compliance: Provide products which are UL-listed and FM approved.
B. MSS Standard Compliance:
1. Provide pipe hangers and supports of which materials, design, and manufacture comply with MSS SP-58.
2. Select and apply pipe hangers and supports, complying with MSS SP-69.
3. Fabricate and install pipe hangers and supports, complying with MSS SP-89.
4. Terminology used in this section is defined in MSS SP-90.

4. SUBMITTALS
A. Product Data: Submit manufacturer's technical product data, including installation instructions for each type of support and anchor. Submit pipe hanger and support schedule showing Manufacturer's figure number, size, location, and features for each required pipe hanger and support.

5. HORIZONTAL-PIPING HANGERS AND SUPPORTS
A. Select size of hangers and supports to exactly fit pipe size for bare piping, and around piping insulation with saddle or shield for insulated piping.

6. VERTICAL-PIPING CLAMPS
A. General: Except as otherwise indicated, provide factory-fabricated vertical-piping clamps complying with MSS SP-58, of one of the following types listed, selected by Installer to suit vertical piping systems, in accordance with MSS SP-69 and manufacturer's published product information. Select size of vertical piping clamps to exactly fit pipe size of bare pipe. Provide copper-plated clamps for copper-piping systems.

7. HANGER-ROD ATTACHMENTS
A. General: Except as otherwise indicated, provide factory-fabricated hanger-rod attachments complying with MSS SP-58, of one of the following MSS types listed, selected by Installer to suit horizontal-piping hangers and building attachments, in accordance with MSS SP-69 and manufacturer's published product information. Use only one type by one manufacturer for each piping service. Select size of hanger-rod attachments to suit hanger rods. Provide copper-plated hanger-rod attachments for copper-piping systems.
B. Hangers shall be spaced so as to support piping properly. Cast iron soil pipes shall be supported on hangers spaced not more than pipe length being employed. Hangers for all other copper or steel piping shall be spaced according to the following schedule:

Pipe Size	Max Hanger Spacing	Minimum Rod Size
1/2"	6'	3/8"
3/4"	7'	3/8"
1"	8'	3/8"
1-1/4"	8'	3/8"
1-1/2"	8'	3/8"
2" and larger	8'	3/8"

C. At no time shall any section of pipe have less than two supports.

8. BUILDING ATTACHMENTS
A. General: Except as otherwise indicated, provide factory-fabricated building attachments complying with MSS SP-58, of one of the following MSS types listed, selected by Installer to suit building substrate conditions, in accordance with MSS SP-69 and manufacturer's published product information. Select size of building attachments to suit hanger rods. Provide copper-plated building attachments for copper-piping systems.

9. SADDLES AND SHIELDS
A. General: Except as otherwise indicated, provide saddles or shields under piping hangers and supports, factory-fabricated, for all insulated piping. Size saddles and shields for exact fit to mate with pipe insulation.

10. MISCELLANEOUS MATERIALS
A. Metal Framing: Provide products complying with NEMA STD ML 1.
B. Steel Plates, Shapes, and Bars: Provide products complying with ASTM A36.
C. Cement Grout: Portland cement (ASTM C 150, Type I or Type III) and clean uniformly graded, natural sand (ASTM C 404, Size No. 2). Mix at a ratio of 1.0 part cement to 3.0 parts sand, by volume, with minimum amount of water required for placement and hydration.

11. ROOF EQUIPMENT SUPPORTS
A. General: Where not indicated to be provided by the equipment manufacturer, construct roof equipment supports as detailed on construction documents.
B. Construct of sizes as indicated, compensate for slope in roof so top of support is dead level.

12. INSPECTION
A. Examine areas and conditions under which supports and anchors are to be installed. Do not proceed with work until unsatisfactory conditions have been corrected in manner acceptable to Installer.

13. INSTALLATION OF BUILDING ATTACHMENTS:
A. Install building attachments at required locations within concrete or on structural steel for proper piping support. Space attachments within maximum piping span length indicated in MSS SP-69. Install additional concentrated loads, including valves, flanges, guides, strainers, expansion joints, and at changes in direction of piping. Install concrete inserts before concrete is placed; fasten insert securely to forms. Where concrete with compressive strength less than 2,500 psi is indicated, install reinforcing bars through openings at top of inserts.

14. INSTALLATION OF HANGERS AND SUPPORTS:
A. General: Install hangers, supports, clamps, and attachments to support piping properly from building structure; comply with MSS SP-69. Arrange for grouping of parallel runs of horizontal piping to be supported together on trapeze type hangers where possible. Install supports with maximum spacings complying with MSS SP-69. Where piping of various sizes is to be supported together by trapeze hangers, space hangers for smallest pipe size or install intermediate supports for smaller diameter pipe. Do not use wire or perforated metal to support piping, and do not support piping from other piping.
B. Install hangers and supports complete with necessary inserts, bolts, rods, nuts, washers, and other accessories. Except as otherwise indicated for exposed continuous pipe runs, install hangers and supports of same type and style as installed for adjacent similar piping.
C. Support fire-water piping independently of other piping.
D. Provisions for Movement:
1. Install hangers and supports to allow controlled movement of piping systems and to permit freedom of movement between pipe anchors, and to facilitate action of expansion joints, expansion loops, expansion bends, and similar units.
2. Load Distribution: Install hangers and supports so that piping live and dead loading and stresses from movement will not be transmitted to connected equipment.
3. Pipe Slopes: Install hangers and supports to provide indicated pipe slopes, and so that maximum pipe deflections allowed by ANSI B31 Pressure Piping Codes are not exceeded.
E. Insulated Piping: Comply with the following installation requirements.
1. Clamps: Attach clamps, including spacers (if any), to piping with clamps projecting through insulation; do not exceed pipe stresses allowed by ANSI B31.
2. Shields: Where low-compressive-strength insulation or vapor barriers are indicated on cold or chilled water piping, install coated protective shields. For pipe 8" and over, install wood insulation saddles.
3. 3. Saddles: Where insulation without vapor barrier is indicated, install protection saddles.

15. INSTALLATION OF ANCHORS:
A. Install anchors at proper locations to prevent stresses from exceeding those permitted by ANSI B31, and to prevent transfer of loading and stresses to connected equipment.
B.Fabricate and install anchor by welding steel shapes, plates and bars to piping and to structure. Comply with ANSI B31 and with AWS standards.
C. Where expansion compensators are indicated, install anchors in accordance with expansion unit manufacturer's written instructions, to limit movement of piping and forces to maximums recommended by manufacturer for each unit.
D. Anchor Spacings: Where not otherwise indicated, install anchors at ends of principal pipe-runs, at intermediate points in pipe-runs between expansion loops and bends. Make provisions for preset of anchors as required to accommodate both expansion and contraction of piping.

16. EQUIPMENT SUPPORTS:
A. Provide structural steel stands to support equipment not floor mounted or hung from structure. Construct of structural steel members or steel pipe and fittings. Provide factory-fabricated tank saddles for tanks mounted on steel stands.
B. Furnish roof equipment supports to Contractor for installation as part of work of Division 7; not work of this section.

ARCHITECT:
DAVID SCOTT WINDLE, AIA
6201 CAMPUS CIRCLE DRIVE E.
IRVING, TEXAS 75038
TEL: 972.870.1288
WWW.IDSTUDIO4.COM
E-MAIL scottw@idstudio4.com

CORPORATE:
BRINKER RESTAURANT CORPORATION, A VIRGINIA CORPORATION
3000 OLYMPUS BLVD.
DALLAS, TEXAS 75019
972.980.9917
www.brinker.com

09/23/2024
ISSUE FOR BID
THESE DOCUMENTS ARE FOR BIDDING PURPOSES ONLY. DO NOT USE FOR CONSTRUCTION.

RESTAURANT #CH1679
PROTOTYPE 18.5FS

CHILI'S TOOELE
951 N MAIN STREET
TOOELE, UT 84074

CLIENT: BRINKER RESTAURANT CORP. A VIRGINIA CORPORATION

DATE	DESCRIPTION
6/27/2024	ISSUE FOR PERMIT
9/23/2024	ISSUE FOR BID

△	DATE	DESCRIPTION

PROJECT NUMBER:
CHI24007

SHEET TITLE:
SPECIFICATIONS 15010 - 15140

SHEET NUMBER:
SP111

SECTION 15250 - MECHANICAL INSULATION

1. RELATED DOCUMENTS

A. Drawings and general provisions of Contract, including General and Supplementary Conditions and Division-1 Specification sections, apply to work of this section.
B. Division-15 Basic Mechanical Materials and Methods sections apply to work of this section.

2. DESCRIPTION OF WORK

A. Extent of mechanical insulation required by this section is indicated on drawings and schedules, and by requirements of this section.
B. Types of mechanical insulation specified in this section include the following:
1. Piping System Insulation:
a. Flexible Unicellular, 1/2" thickness.
2. Duct Work System Insulation:
a. Fiberglass, 2" thickness.
C. Refer to Division-15 section "Supports and Anchors" for protection saddles, protection shields, and thermal hanger shields; not work of this section.
D. Refer to Division-15 section "Mechanical Identification" for installation of identification devices for piping, ductwork, and equipment; not work of this section.

3. QUALITY ASSURANCE

A. Flame/Smoke Ratings: Provide composite mechanical insulation (insulation, jackets, coverings, sealers, mastics and adhesives) with flame-spread index of 25 or less, and smoke-developed index of 50 or less, as tested by ASTM E 84 (NFPA 255) method.
B. Exception: Outdoor mechanical insulation may have flame spread index of 75 and smoke developed index of 150.

4. PIPING INSULATION MATERIALS

A. Flexible Unicellular Piping Insulation: ASTM C 534, Type I.
B. Jackets for Piping Insulation: ASTM C 921, Type I for piping with temperatures below ambient, Type II for piping with temperatures above ambient. Type I may be used for all piping at Installers option.
C. Encase pipe fittings insulation with one-piece premolded PVC fitting covers, fastened as per manufacturer's recommendations.
D. Encase exterior piping insulation with aluminum jacket with weatherproof construction.
E. Staples, Bands, Wires, and Cement: As recommended by insulation manufacturer for applications indicated.
F. Adhesives, Sealers, and Protective Finishes: As recommended by insulation manufacturer for applications indicated.

5. DUCTWORK INSULATION MATERIALS

A. Jackets for Ductwork Insulation: ASTM C 921, Type I for ductwork with temperatures below ambient; Type II for ductwork with temperatures above ambient.
B. Ductwork Insulation Accessories: Provide staples, bands, wires, tape, anchors, corner angles and similar accessories as recommended by insulation manufacturer for applications indicated.
C. Ductwork Insulation Compounds: Provide cements, adhesives, coatings, sealers, protective finishes and similar compounds as recommended by insulation manufacturer for applications indicated.

6. INSPECTION

A. Examine areas and conditions under which mechanical insulation is to be installed. Do not proceed with work until unsatisfactory conditions have been corrected in manner acceptable to Installer.

7. PLUMBING PIPING SYSTEM INSULATION

A. Insulation Omitted: Omit insulation on chrome-plated exposed piping (except for handicapped fixtures), air chambers, unions, strainers, check valves, balance cocks, flow regulators, drain lines from water coolers, drainage piping located in crawl spaces or tunnels, buried piping, fire protection piping, and pre-insulated equipment.
B. Domestic Cold Water Piping:
1. One inch thick Rigid fiberglass insulation with white all-service jack and vapor barrier, or one half-inch thick polyolefin/polyethylene closed cell foam with seams and butt joints adhered and sealed shall be one and one-half inch thick or meet the minimum of the currently adopted IECC. Fittings shall be pre-molded of the same material. Installation shall be in accordance with manufacturer's instructions. Preformed fiber glass pipe insulation with factory applied, self-seal lap and butt strips
C. Horizontal Storm Water Piping and Storm Water Drains:
1. Same as domestic cold water piping.
D. Domestic Hot Water Supply Piping and Domestic Hot Water Recirculating Piping:
1. Rigid fiberglass insulation with white all-service jack, or polyolefin/polyethylene closed cell foam with seams and butt joints adhered and sealed shall be one and one-half inch thick or meet the minimum of the currently adopted IECC. Fittings shall be pre-molded of the same material. Installation shall be in accordance with manufacturer's instructions. Preformed fiber glass pipe insulation with factory applied, self-seal lap and butt strips.
E. Air Conditioning Cooling Condensate Drains:
1. One-half inch thick Armaflex. Fittings shall be pre-molded of the same material. Installation shall be in accordance with manufacturer's instructions.
F. Indirect Waste Piping from Ice Machines and Coolers/Freezers:
1. Same as Air Conditioning Cooling Condensate Drains.

8. HVAC PIPING SYSTEM INSULATION

A. Insulation Omitted: Omit insulation on hot piping within radiation enclosures or unit cabinets; on cold piping within unit cabinets provided piping is located over drain pan; on heating piping beyond control valve, located within heated space; on condensate piping between steam trap and union; and on unions, flanges, strainers, flexible connections, and expansion joints.
B. Sub-Zero Piping (Below 0oF (-18oC)):
1. Application Requirements: Insulate the following sub-zero HVAC piping systems:
a. Low temperature refrigerant piping.

9. DUCTWORK SYSTEM INSULATION

A. Dual Temperature Ductwork:
1. Application Requirements: Insulate the following dual temperature ductwork:
a. Hot/cold supply and return ductwork between fan discharge or HVAC unit discharge and room terminal outlets, application limited to concealed locations.

10. INSTALLATION OF PIPING INSULATION

A. General: Install insulation products in accordance with manufacturer's written instructions, and in accordance with recognized industry practices to ensure that insulation serves its intended purpose.
B. Install insulation on pipe systems subsequent to installation of heat tracing, painting, testing, and acceptance of tests.
C. Install insulation materials with smooth and even surfaces. Insulate each continuous run of piping with full-length units of insulation, with single cut piece to complete run. Do not use cut pieces or scraps abutting each other.
D. Clean and dry pipe surfaces prior to insulating. Butt insulation joints firmly together to ensure complete and tight fit over surfaces to be covered.
E. Maintain integrity of vapor-barrier jackets on pipe insulation, and protect to prevent puncture or other damage.
F. Cover valves, fittings, and similar items in each piping system with equivalent thickness and composition of insulation as applied to adjoining pipe run. Install factory molded, precut or job fabricated units (at Installer's option) except where specific form or type is indicated.
G. Extend piping insulation without interruption through walls, floors, and similar piping penetrations, except where otherwise indicated.
H. Butt pipe insulation against pipe hanger insulation inserts. For hot pipes, apply 3" wide vapor barrier tape or band over the butt joints. For cold piping apply wet coat of vapor barrier lap cement on butt joints and seal joints with 3" wide vapor barrier tape or band.

11. INSTALLATION OF DUCTWORK INSULATION

A. General: Install insulation products in accordance with manufacturer's written instructions, and in accordance with recognized industry practices to ensure that insulation serves its intended purpose.
B. Install insulation materials with smooth and even surfaces.
C. Clean and dry ductwork prior to insulating. Butt insulation joints firmly together to ensure complete and tight fit over surfaces to be covered.
D. Maintain integrity of vapor-barrier on ductwork insulation, and protect it to prevent puncture and other damage.
E. Extend ductwork insulation without interruption through walls, floors, and similar ductwork penetrations, except where otherwise indicated.
F. Ductwork Exposed to Weather: Protect outdoor insulation from weather by installing outdoor protective finish or jacketing as recommended by manufacturer.
G. Corner Angles: Except for oven and hood exhaust duct insulation, install corner angles on external corners of insulation on ductwork in exposed finished spaces before covering with jacketing.

12. PROTECTION AND REPLACEMENT

A. Replace damaged insulation which cannot be satisfactorily repaired, including units with vapor barrier damage and moisture saturated units.
B. Protection: Insulation Installer shall advise Contractor of required protection for insulation work during remainder of construction period, to avoid damage and deterioration.

SECTION 15300 - FIRE PROTECTION

1. RELATED DOCUMENTS:

A. Drawings and general provisions of Contract, including General and Supplementary Conditions and Division-1 Specification sections, apply to work of this section.
B. Division-15 Basic Mechanical Materials and Methods sections apply to work of this section.

2. DESCRIPTION OF WORK:

A. Provide design (submitted to owner before permit), labor materials, equipment, tools and services, and perform operations required for and reasonably incidental to, the providing of an automatic sprinker system to serve the facility in compliance with applicable regulations.
B. Extent of fire protection work is indicated on drawings and schedules, and by requirements of this section.
C. Refer to Division-2 sections for fire protection piping and appurtenances exterior to building; not work of this section.
D. Refer to Division-10 sections for fire extinguishers, and fire extinguisher cabinets and accessories; not work of this section.
E. Sprinkler Contractor shall coordinate layout with ductwork, diffusers, lighting, plumbing piping, etc
F. A licensed sprinkler contractor shall make system calculations and installation.
G. Plans shall be sealed and signed by Responsible Managing Employee (R.M.E.), Fire Sprinkler Engineer of Record, or as required by local code and Fire Marshal.
H. A complete fire protection sprinkler system shall be put into operation at the earliest possible date to protect the building construction and the Owner's materials and devices and accessories installed within the structure as the structure is being completed.

3. QUALITY ASSURANCE:

A. Codes and Standards:
1. CABO-ANSI Compliance: Install fire protection systems in accordance with CABO-ANSI "Fire Alarm/Fire Sprinkler".
2. NFPA Compliance: Install fire protection systems in accordance with NFPA 13 "Standard for the Installation of Sprinkler Systems".
3. UL Compliance: Provide fire protection products in accordance with UL standards; provide UL label on each product.
4. FM Compliance: Provide fire protection products and installations in accordance with FM standards; provide FM label on each product.
5. Fire Department/Marshal Compliance: Install fire protection systems in accordance with local regulations of fire department or fire marshal.
6. Screw Thread Connections: Comply with local Fire Department/ Marshal regulations for sizes, threading and arrangement of connections for fire department equipment to sprinkler systems.

4. SUBMITTALS:

A. Product Data: Submit manufacturer's technical product data and installation instructions for fire protection materials and products.
B. Shop Drawings: Submit scaled layout drawings for fire protection pipe and fittings including, but not necessarily limited to, pipe and tube sizes, locations, elevations, and slopes of horizontal runs, wall and floor penetrations, and connections. Indicate interface and spatial relationship between piping and proximate equipment.
C. Approval Drawings: Prepare approval drawings of fire protection systems indicating pipe sizes, pipe locations, fittings, shutoffs, equipment, etc. Submit to Agency having jurisdiction for approval. Submit one approved copy, bearing stamp and/or signature of Agency having jurisdiction, before proceeding with installation.
D. Approval Calculations: Prepare hydraulic calculations of fire protection systems. Submit to Agency having jurisdiction for approval. Submit one approved copy, bearing stamp and/or signature of Agency having jurisdiction, before proceeding with installation.
E. Certificate of Installation: Submit certificate upon completion of fire protection piping work which indicates that work has been tested in accordance with NFPA 13, and also that system is operational, complete, and has no defects.
F. Record Drawings: At project closeout, submit record drawings of installed fire protection piping and products; in accordance with requirements of Division 1.
G. Maintenance Data: Submit maintenance data and parts lists for fire protection materials and products. Include this data, product data, shop drawings, approval drawings, approval calculations, certificate of installation, and record drawings in maintenance manual; in accordance with requirements of Division 1.

5. WATER SERVICE

A. This contractor shall extend water service from utility lines as shown and required. The contractor shall include all costs of water mains, taps, valving and other required installation accessories.
B. Water service shall be run into the building using piping material compatible with existing utility lines as allowed by local code and installed in accordance with the regulatory authorities and assembled in accordance with manufacturer's published instructions.
C. The design of the water service shall include an industry standard factor of safety, in no cases shall this factor of safety be less than 10%.

6. APPROVED MANUFACTURERS

A. All material, equipment and accessories used in the fire sprinkler systems shall be listed as approved in the "Fire Protection Equipment List" as published by Underwriters' Laboratory, Inc. Certain equipment and material has been listed by manufacturer's name and figure number in these specifications. These listings are to set the standard of design and appearance and similar equipment by listed approved manufacturers or listed as herein before specified will be considered for approval. All materials used in these systems shall be listed in the "Fire Protection Equipment List" and shall bear the proper label as identified therein.
B. Approved manufacturers for siamese connections and similar fire protection equipment shall be W.D. Allen, Elkhart, Potter Roemer, Seco, or Standard.
C. Approved manufacturers for sprinkler heads, water motor gongs, alarm valves and related equipment shall be Reliable, Viking, Grinnell or Star.
D. Approved manufacturers for other valves and appurtenances shall be Crane Co., Walworth, Stockham, Lunkenheimer, Jenkins, Kennedy, O.I.C., Grinnell or Traverse City.
E. As an alternate bid only provide CPVC piping in lieu of ferrous piping in concealed locations.

7. MATERIALS AND PRODUCTS:

A. General: Provide piping materials and factory-fabricated piping products of sizes, types, pressure ratings, temperature ratings, and capacities as indicated. Where not indicated, provide proper selection as determined by Installer to comply with installation requirements. Provide sizes and types matching piping and equipment connections; provide fittings of materials which match pipe materials used in fire protection systems. Where more than one type of materials or products are indicated, selection is Installer's option.

8. BASIC IDENTIFICATION:

A. General: Provide identification complying with Division-15 Basic Mechanical Materials and Methods section "Mechanical Identification", in accordance with the following listing:

Fire Protection Piping: Plastic pipe markers.
Fire Protection Valves: Plastic valve tags.
Fire Protection Signs: Provide the following signs:

1. At each sprinkler valve, sign indicating what portion of system valve controls.
2. At each outside alarm device, sign indicating what authority to call if device is activated.

9. BASIC PIPES AND PIPE FITTINGS:

A. General: Provide pipes and pipe fittings complying with Division-15 Basic Mechanical Materials and Methods section "Pipes and Pipe Fittings", in accordance with the following listing:
B. Piping 2-1/2" and larger shall be schedule 10 lightwall. Piping 2" and smaller shall be Allied XL unless otherwise noted.

10. BASIC PIPING SPECIALTIES:

A. General: Provide piping specialties complying with Division-15 Basic Mechanical Materials and Methods section "Piping Specialties", in accordance with the following listing:
1. Pipe escutcheons.
2. Dielectric unions.
3. Drip pans.
4. Pipe sleeves.
5. Sleeve seals.
6. Fire Barrier Penetration Seals.

11. BASIC SUPPORTS AND ANCHORS:

A. General: Provide supports and anchors complying with Division-15 Basic Mechanical Materials and Methods section "Supports and Anchors", in accordance with the following listing:
1. Adjustable steel clevis hangers, adjustable steel band hangers, or adjustable band hangers, for horizontal-piping hangers and supports.
2. Two-bolt riser clamps for vertical piping supports.
3. Steel turnbuckles and malleable iron sockets for hanger-rod attachments.
4. Top-beam C-clamps, side beam or channel clamps or center beam clamps for building attachments.

12. BASIC VALVES:

A. General: Provide valves complying with Division-15 Basic Mechanical Materials and Methods section "Valves", in accordance with the following listing:
1. Interior Valves:

Sectional: Gate valves or butterfly valves; UL listed.
Check: Swing check valves; UL listed.

13. VALVES:

A. Furnish gate, globe, check and ball drip valves where indicated on the drawings, where required for proper operation and sectionalizing of the systems and where required by governing authorities mentioned hereinbefore whether indicated or not.
B. Each valve in the fire protection system shall be of the gate valve type with the exception of valves 1 inch in size and smaller which shall be all bronze globe type. Gate valves 2-1/2 inch in size and smaller shall be bronze with screwed ends. Valves 3 inches in size and larger shall be iron body flanged OS&Y, and each of the above shall be with rising stem design.
C. Check valves shall be iron body swing check bronze mounted with bronze face discs with flanged cap and flanged body in sizes 3 inches and larger and bronze body screwed end in sizes 2-1/2 inches and smaller. Valves shall be Underwriters' Laboratory listed and labeled.
D. Ball drips shall be automatic ball drip Underwriters' Laboratory listed with plain open end or screwed end as required for installation in the piping system and proper connection to drain system.

14. DOUBLE CHECK VALVES

A. Double check valves shall be complete assembly including tight closing shut-off valves and test cocks. Assembly shall meet all State and Local water company Standards.

15. BASIC METERS AND GAGES:

A. General: Provide meters and gages complying with Division-15 Basic Mechanical Materials and Methods section "Meters and Gages", in accordance with the following listing:

Pressure gages, 0-250 psi range.

16. FIRE PROTECTION SPECIALTIES:

A. General: Provide fire protection specialties, UL listed, in accordance with the following listing. Provide sizes and types which mate and match piping and equipment connections.
B. Water Flow Indicators: Provide vane type water flow detectors.
C. Water-Motor Gongs: Install water motor gongs per Drawings as approved by Owner and as required by Code. Water motor gongs shall be water operated with outside gong and interior water motor. Drain from water motor shall discharge into sprinkler drain or other floor drain as shown on drawings. Each water motor gong shall be piped to serve alarm valves as diagramed. Water motor gongs shall be surface type furnished in prime coat for final painting under another section of the work. As an option, if approved by local jurisdiction, electric gongs may be utilized.
D. Low Air Pressure Horn: Provide low air pressure horn as indicated.
E. Supervisory Switches: Provide products recommended by manufacturer for use in service indicated.

17. SPRINKLER HEADS:

A. This contractor shall furnish and install all sprinkler heads for the complete installation of the sprinkler facilities and shall obtain approval of all governing authorities mentioned hereinbefore. Sprinkler heads in exposed areas shall be upright; sprinkler heads in lay-in ceilings, wood ceilings, or gypboard ceilings shall be recessed. All sprinkler heads in grid ceiling shall be centered both directions in tile.

18. SPRINKLER HEAD ESCUTCHEONS:

A. Each sprinkler head, installed through a finished ceiling shall be provided with an escutcheon. Escutcheons shall be one piece metal construction fabricated to properly fit pipe and cover ceiling opening and shall be furnished with brushed chrome finish.

19. FIRE DEPARTMENT CONNECTIONS:

A. Fire Department connection inlets shall be post or flush wall type as required. Unit shall be complete with chromium plated polished brass face connectors and caps, with proper cast in identification, caps and chains, all sized and arranged as shown and required. These units shall be furnished with angle or straight type bodies as required. All threads shall comply with the standard threads as used by the local fire department.

20. INSPECTION:

A. General: Examine areas and conditions under which fire protection materials and products are to be installed. Do not proceed with work until unsatisfactory conditions have been corrected in a manner acceptable to Installer.

21. INSTALLATION OF BASIC IDENTIFICATION:

A. General: Install mechanical identification in accordance with Division-15 Basic Mechanical Materials and Methods section "Mechanical Identification".
B. Install fire protection signs on piping in accordance with NFPA 13 requirements.
C. On each valve and at each control point, furnish and install a red enamel sign with white numerals indicating the duty and operation of the valve or control. Signs shall be attached to valve stems by suitable brass chains. Signs shall be sizes and arrangements as approved.

22. INSTALLATION OF PIPES AND PIPE FITTINGS:

A. General: Install pipes and pipe fittings in accordance with Division-15 Basic Mechanical Materials and Methods section "Pipes and Pipe Fittings".
B. All piping materials for fire protection systems with the exception of underground piping as hereinbefore specified and air piping shall be standard or lightweight black steel pipe, 175 psig minimum water working pressure, butt or lap welded construction or copper water tube as specified in NFPA Bulletin 13. If the local authorities having jurisdiction requirements are more stringent than above, the local regulations must apply. All fittings furnished for use on these systems shall be capable of with standing test pressure as required by regulatory authorities.
C. Coordinate with other work, including plumbing piping, as necessary to interface components of fire protection piping properly with other work.
D. At the Contractor's option, he may join piping systems by welding or use of groove type joints and couplings in lieu of screwed assembly wherever this method is approved by the regulatory authorities.
E. Where pendant type sprinkler heads are to be installed, the feed in the branch line shall be installed with the outlet facing down and the pendant drop extended directly to the head. Branches shall be properly lined so as to provide for a square straight even pattern. Drops to pendant type sprinkler heads and ceiling tiles shall not affect the position of the ceiling tiles in the suspension system.
F. All piping systems shall be pitched back to the risers unless otherwise indicated. Furnish and install necessary drain valves or plugs for each section of the piping system and for those sections which cannot be drained at the riser, install valves and caps at low points. Drains shall be provided where required for proper drainage of systems throughout and shall be properly discharged to floor drains or other approved locations.
G. Install hose outlet valves in piping where hose outlets are indicated.
H. Install sectional valves in inlet piping, at bottom of each riser, and in loops as indicated.
I. Install fire department connection valves in piping where fire department connections are indicated.
J. Install water flow indicators where indicated.
K. Mount supervisory switches on each sectional valve.
L. Install manual shutoff at each audible alarm station.
M. Install valved hose connections of sizes indicated, or 3/4" size if not otherwise indicated, on sprinkler at ends of branch lines and cross mains at locations where indicated.
N. This contractor shall furnish and install the necessary inspector's test connections and flushing connections as required by governing authorities mentioned hereinbefore. Capped nipples not less than 4 inches long shall be provided at the ends of cross mains for flushing the system.
O. Sprinkler piping in unconditioned areas shall be freeze protected by fire protection contractor. Heat is not being provided by HVAC or electrical contractors.

23. INSTALLATION OF PIPING SPECIALTIES:

A. Install piping specialties in accordance with Division-15 Basic Mechanical Materials and Methods section "Piping Specialties".

24. INSTALLATION OF SUPPORTS AND ANCHORS:

A. Install supports and anchors, in accordance with Division-15 Basic Mechanical Materials and Methods section "Supports and Anchors".

25. INSTALLATION OF VALVES:

A. Install valves in accordance with Division-15 Basic Materials and Methods section "Valves".
B. Detector Check Valves: Install in horizontal position as indicated, orientated for proper flow direction. Install by-pass meter with globe valve and check valve, in accordance with manufacturer's installation directions.

26. INSTALLATION OF METERS AND GAGES:

A. Install meters and gages in accordance with Division-15 Basic Mechanical Materials and Methods section "Meters and Gages".

27. INSTALLATION OF FIRE PROTECTION SPECIALTIES:

A. General: Install fire protection specialties as indicated, and in accordance with NFPA 13 and 14.
B. Furnish wiring requirements to electrical Installer for electrical wiring of supervisory switches.

28. FIELD QUALITY CONTROL:

A. The Fire Sprinkler Contractor shall be responsible for continuous inspection as it is being made to verify its compliance with all of the hereinbefore-mentioned regulations, codes and governing authorities.
B. Upon completion and as required during the installation of various sections, the system shall be thoroughly tested by the contractor in the presence of the Owner and turned over to the Owner complete with all particulars ready for use in first class condition. All pipe and fittings shall be tested with a minimum hydrostatic test at 200 psig and shall be capable of withstanding this test for a minimum of two hours. Piping shall be tested in sections as work progresses.
C. The tests shall be performed in accordance with the standard form as provided by the National Automatic Sprinkler and Fire Protection Association, Inc. entitled "Report of Inspection". These forms shall be filled out in triplicate. Copies of the test forms shall be given to the Construction Manager and local Fire Department authorities for their review and file.
D. Upon completion of the work, the Contractor shall furnish certificates of approval from the governing authorities mentioned herein. Before that the work has been inspected as it has been installed and it meets the requirements of all authorities hereinbefore mentioned.

29. EXTRA STOCK:

A. Heads: For each style and temperature range required, furnish additional sprinkler heads, amounting to one unit for every 100 installed units, but not less than 5 units of each. Extra stock shall be stored in the sprinkler box in the mechanical room.

SECTION 15412 - SOIL AND WASTE SYSTEMS

1. RELATED DOCUMENTS:

A. Drawings and general provisions of Contract, including General and Supplementary Conditions and Division-1 Specification sections, apply to work of this section.
B. Division 15 Basic Mechanical Materials and Methods sections apply to work of this section.

2. DESCRIPTION OF WORK:

A. Extent of soil and waste systems work, is indicated on drawings and schedules, and by requirements of this section.
B. Exterior sanitary sewer system is specified in applicable Division-2 and Division-15 sections, and is included as work of this section.
C. Trenching and backfilling required in conjunction with underground building drain piping is specified in applicable Division-2 and Division-15 sections, and is included as work of this section.
D. Refer to Division-7 section "Flashing and Sheet Metal" for flashings required in conjunction with soil and waste systems; not work of this section.

3. QUALITY ASSURANCE:

A. Codes and Standards:
1. Plumbing Code Compliance: Comply with applicable portions of the local adopted code of the Authority having jurisdiction pertaining to plumbing materials construction and installation of products.
2. ANSI Compliance: Comply with applicable ANSI standards pertaining to materials, products, and installation of gravity sewer systems.
3. ASSE Compliance: Comply with applicable ASSE standards pertaining to materials, products, and installation of gravity sewer systems.
4. PDI Compliance: Comply with applicable PDI standards pertaining to products and installation of soil and waste systems.

4. MATERIALS AND PRODUCTS:

A. General: Provide piping materials and factory-fabricated piping products of sizes, types, pressure ratings, and capacities as indicated. Where not indicated, provide proper selection as determined by Installer to comply with installation requirements. Provide sizes and types matching piping and equipment connections; provide fittings of materials which match pipe materials used in soil and waste systems. Where more than one type of materials or products are indicated, selection is Installer's option.

5. BASIC IDENTIFICATION:

A. General: Provide identification complying with Division-15 Basic Mechanical Materials and Methods section "Mechanical Identification", in accordance with the following listing:
1. Above Ground Soil, Waste, and Vent Piping: Plastic pipe markers.
2. Underground Building Drain Piping: Underground-type plastic line markers.

6. BASIC PIPES AND PIPE FITTINGS:

A. General: Provide pipes and pipe fittings complying with Division-15 Basic Mechanical Materials and Methods section "Pipes and Pipe Fittings", in accordance with the following listing:
B. All Drain, Waste and Vent Piping:
1. Refer to plans for specifications.

7. BASIC PIPING SPECIALTIES:

A. General: Provide piping specialties complying with Division-15 Basic Mechanical Materials and Methods section "Piping Specialties", in accordance with the following listing:
1. Pipe Escutcheons.
2. Mechanical Sleeve Seals.
3. Pipe Sleeves.
4. Sleeve Seals.

8. BASIC SUPPORTS AND ANCHORS:

A. General: Provide supports and anchors complying with Division-15 Basic Mechanical Materials and Methods section "Supports and Anchors" in accordance with the following listing:
1. Adjustable steel clevis hangers, steel pipe clamps, and pipe saddle supports for horizontal piping hangers and supports.
2. Two-bolt riser clamps for vertical piping supports.
3. Concrete inserts, C-clamps, and steel brackets for building attachments.

9. DRAINAGE PIPING PRODUCTS:

A. General: Provide factory-fabricated drainage piping products of size and type indicated. Where not indicated, provide proper selection as determined by Installer to comply with installation requirements and governing regulations.
B. Cleanout Plugs: Cast-bronze or brass, threads complying with ANSI B2.1, countersunk head.
C. Floor Cleanouts: Cast-iron body and frame; cleanout plug; adjustable round top as follows:
1. Nickel-Bronze Top: Manufactures standard cast unit of the pattern indicated.
a. Pattern: Exposed rim type, with recess to receive 1/8" thick resilient floor finish.
D. Wall Cleanouts: Cast-iron body adaptable to pipe with cast-bronze or brass cleanout plug; stainless steel cover including screws.
E. Flashing Flanges: Cast-iron watertight stack or wall sleeve with membrane flashing ring. Provide underdeck clamp and sleeve length as required.
F. Vent Flashing Sleeves: Cast-iron caulking type roof coupling for cast-iron stacks, cast-iron threaded type roof coupling for steel stacks, and cast-bronze stack flashing sleeve for copper tubing.

10. FLOOR DRAINS:

A. General: Provide floor drains of sizes and types as indicated on drawings

11. TRAP PRIMERS:

A. General: Provide bronze trap primer valve with automatic vacuum breaker, complying with ASSE 1018, with 1/2" connections matching mating piping system. Trap primers shall be concealed within the wall framing, and finished with a wall mounted accessible cover plate.

12. INSPECTION:

A. Examine substrates and conditions under which soil and waste systems are to be installed. Do not proceed with work until unsatisfactory conditions have been corrected in manner acceptable to Installer.

13. INSTALLATION OF BASIC IDENTIFICATION:

A. General: Install mechanical identification in accordance with Division-15 Basic Mechanical Materials and Methods section "Mechanical Identification".

14. INSTALLATION OF ABOVE GROUND PIPING:

A. General: Install soil and waste piping in accordance with Division-15 Basic Mechanical Materials and Methods section "Pipes and Pipe Fittings", and with code requirements of the local Authority having jurisdiction.

15. INSTALLATION OF BUILDING DRAIN PIPING:

A. General: Install underground building drains as indicated and in accordance with the code requirements of the local Authority having jurisdiction. Lay underground building drains beginning at low point of systems, true to grades and alignment indicated with unbroken continuity of invert. Place bell ends of piping facing upstream. Install required gaskets in accordance with manufacturer's recommendations for use of lubricants, cements, and other special installation requirements. Clean interior of piping of dirt and other superfluous material as work progresses. Maintain swab or drag in line and pull past each joint as it is completed. Place plugs in ends of uncompleted piping at end of day or whenever work stops.
B. Install soil and vent piping pitched to drain at minimum slope of 1/4" per foot (2%) for piping 3" and smaller, and 1/8" per foot (1%) for piping 4" and larger.

16. INSTALLATION OF PIPING SPECIALTIES:

A. Install piping specialties in accordance with Division-15 Basic Mechanical Materials and Methods section "Piping Specialties".

17. INSTALLATION OF SUPPORTS AND ANCHORS:

A. Install supports and anchors in accordance with Division-15 Basic Mechanical Materials and Methods section "Supports and Anchors".

18. INSTALLATION OF DRAINAGE PIPING PRODUCTS:

A. Cleanouts: Install in above ground piping and building drain piping as indicated, as required by code requirements of the local Authority having jurisdiction; and at each change in direction of piping greater than 45o; at minimum intervals of 50' for piping 4" and smaller and 100' for larger piping; and at base of each vertical soil or waste stack. Install floor and wall cleanout covers for concealed piping, select type to match adjacent building finish.
B. Flashing Flanges: Install flashing flange and clamping device with each stack and cleanout passing through waterproof membranes.
C. Vent Flashing Sleeves: Install on stacks passing through roof, secure over stack flashing in accordance with manufacturer's instructions.

19. INSTALLATION OF FLOOR DRAINS:

A. General: Install floor drains in accordance with manufacturer's written instructions and in locations indicated.
B. Coordinate flashing work with work of waterproofing and adjoining substrate work.
C. Coordinate with soil and waste piping as necessary to interface floor drains with drainage piping systems.
D. Install floor drains at low points of surface areas to be drained, or as indicated. Set tops of drains flush with finished floor.
E. Install drain flashing collar or flange so that no leakage occurs between drain and adjoining flooring. Maintain integrity of waterproof membranes, where penetrated.
F. Position drains so that they are accessible and easy to maintain.

20. INSTALLATION OF TRAP PRIMERS:

A. General: Install trap primers as indicated, and in accordance with manufacturer's installation instructions. Pitch piping toward drain trap, minimum of 1/8" per foot (1%). Adjust trap primer for proper flow.

21. EQUIPMENT CONNECTIONS:

A. Piping Runouts to Fixtures: Provide soil and waste piping runouts to plumbing fixtures and drains, with approved trap, of sizes indicated; but in no case smaller than required by code requirements of the local Authority having jurisdiction.
B. Locate piping runouts as close as possible to bottom of floor slab supporting fixtures or drains.

22. FIELD QUALITY CONTROL:

A. Piping Tests: Test soil and waste systems in accordance with requirements of the local Authority having jurisdiction

23. ADJUSTING AND CLEANING:

A. Clean, flush, and inspect soil and waste piping in accordance with requirements of Division-15 Basic Mechanical Materials and Methods section "Pipes and Pipe Fittings".

24. PROTECTION:

A. Protect drains during remainder of construction period, to avoid clogging with construction materials and debris, and to prevent damage from traffic and construction work.

SECTION 15413 - STORM WATER SYSTEMS

1. RELATED DOCUMENTS:

A. Drawings and general provisions of Contract, including General and Supplementary Conditions and Division-1 Specification sections, apply to work of this section.
B. Division-15 Basic Mechanical Materials and Methods sections apply to work of this section.

2. DESCRIPTION OF WORK:

A. Extent of storm water systems work, is indicated on drawings and schedules, and by requirements of this section.
B. Refer to appropriate Division-2 sections for exterior storm sewer system required in conjunction with storm water systems; not work of this section.
C. Refer to other Division-15 sections for insulation required in conjunction with storm water systems; not work of this section.
D. Trenching and backfill required in conjunction with underground building drain piping is specified in applicable Division-2 sections, and is included as work of this section.
E. Refer to Division-7 section "Flashing and Sheet Metal" for flashings required in conjunction with storm water systems; not work of this section.

3. CODES AND STANDARDS:

A. Plumbing Code Compliance: Comply with applicable portions of the adopted code of the local Authority having jurisdiction pertaining to plumbing materials construction and installation of products.
B. ANSI Compliance: Comply with applicable ANSI standards pertaining to materials, products, and installation of storm water systems.

4. SUBMITTALS:

A. Product Data: Submit manufacturer's technical product data for storm water systems materials and products.
B. Maintenance Data: Submit maintenance data and parts lists for storm water systems materials and products. Include this data, product data, shop drawings, and record drawings in maintenance manual; in accordance with requirements of Division 1.

5. MATERIALS AND PRODUCTS:

A. General: Provide piping materials and factory-fabricated piping products of sizes, types, pressure ratings, and capacities as indicated. Where not indicated, provide proper selection as determined by Installer to comply with installation requirements. Provide sizes and types matching piping and equipment connections; provide fittings of materials which match pipe materials used in storm water systems. Where more than one type of materials or products are indicated, selection is Installer's option.

6. BASIC IDENTIFICATION:

A. General: Provide identification complying with Division-15 Basic Mechanical Materials and Methods section "Mechanical Identification", in accordance with the following listing:
B. Above Ground Conductor Piping: Plastic pipe markers.

7. BASIC PIPES AND PIPE FITTINGS:

A. General: Provide pipes and pipe fittings complying with Division-15 Basic Mechanical Materials and Methods section "Pipes and Pipe Fittings", in accordance with the following listing:
1. Above Ground Conductor Piping:
a. Refer to plans for specifications.
2. Underground Building Drain Piping:
a. Refer to plans for specifications.

8. BASIC PIPING SPECIALTIES:

A. General: Provide piping specialties complying with Division-15 Basic Mechanical Materials and Methods section "Piping Specialties", in accordance with the following listing:
1. Pipe Escutcheons.
2. Mechanical Sleeve Seals.
3. Fire Barrier Penetration Seals.
4. Drip-Pans.
5. Pipe Sleeves.
6. Sleeve Seals.

ARCHITECT:

DAVID SCOTT WINDLE, AIA

6201 CAMPUS CIRCLE DRIVE E.
IRVING, TEXAS 75038
TEL: 972.870.1288
WWW.IDSTUDIO4.COM
E-MAIL scottw@idstudio4.com

CORPORATE:
BRINKER RESTAURANT CORPORATION,
A VIRGINIA CORPORATION
3000 OLYMPUS BLVD.
DALLAS, TEXAS 75019
972.980.9917
www.brinker.com

09/23/2024
ISSUE FOR BID
THESE DOCUMENTS ARE FOR BIDDING PURPOSES ONLY. DO NOT USE FOR CONSTRUCTION.

RESTAURANT #CH1679
PROTOTYPE 18.5FS

CHILI'S
TOOELE
951 N MAIN STREET
TOOELE, UT 84074

CLIENT: BRINKER RESTAURANT CORP.
A VIRGINIA CORPORATION

DATE	DESCRIPTION
6/27/2024	ISSUE FOR PERMIT
9/23/2024	ISSUE FOR BID

⚠	DATE	DESCRIPTION

PROJECT NUMBER:
CHI24007

SHEET TITLE:
SPECIFICATIONS
15250 - 15413

SHEET NUMBER:
SP112

9. BASIC, SUPPORTS AND ANCHORS:

A. General: Provide supports and anchors, complying with Division-15 Basic Mechanical Materials and Methods section "Supports, and Anchors", in accordance with the following listing:

1. Adjustable steel clevis hangers; steel pipe clamps, and pipe saddle supports for horizontal piping hangers and supports.
2. Side beam clamps.
3. Two-bolt riser clamps for vertical piping supports.
4. Concrete inserts, C-clamps, and steel brackets for building attachments.

10. EXPANSION JOINTS:

A. General: Provide cast-iron body expansion joints with adjustable bronze sleeve, bronze bolts with wing nuts; for vertical installation only.

11. DRAINAGE PIPING PRODUCTS:

A. General: Provide factory-fabricated drainage piping products of size and type indicated. Where not indicated, provide proper selection as determined by Installer to comply with installation requirements and governing regulations.
B. Cleanout Plugs: Cast-bronze or brass, threads complying with ANSI B2.1, countersunk head.
C. Flashing Flanges: Cast-iron watertight stack or wall sleeve with membrane flashing ring. Provide underdeck clamp and sleeve length as required.

12. ROOF DRAINS:

A. General: Provide roof drains of size as indicated on drawings; and type, including features, as specified herein. Roof drains shall be acceptable for use with single ply roofing systems.
B. Roof Drain Type "A": Cast-iron body and combined flashing collar and gravel stop, cast-iron or plastic dome, with the following features:

1. Underdeck clamp.
2. Extension as required for roof insulation depth.
3. Sump Receiver.
4. Expansion Joint.
5. Bottom outlet, inside caulk.

13. INSPECTION:

A. Examine substrate and conditions under which storm water system is to be installed. Do not proceed with work until unsatisfactory conditions have been corrected in manner acceptable to Installer.

14. INSTALLATION OF BASIC IDENTIFICATION:

A. General: Install mechanical identification in accordance with Division-15 Basic Mechanical Materials and Methods section "Mechanical Identification".

15. INSTALLATION PIPING ABOVE GROUND:

A. General: Install storm water piping in accordance with Division-15 Basic Mechanical Materials and Methods section "Pipes and Pipe Fittings", and with the local code of the Authority having jurisdiction.

16. INSTALLATION OF BUILDING DRAIN PIPING:

A. General: Install storm building drains as indicated and in accordance with the local code of the Authority having jurisdiction. Lay storm building drains beginning at low point of systems, true to grade and alignment indicated with unbroken continuity of invert. Place bell ends of piping facing upstream. Install required gaskets in accordance with manufacturer's recommendations for use of lubricants, cements, and other special installation requirements. Clear interior of piping of dirt and other superfluous material as work progresses. Maintain swab or drag in line and pull past each joint as it is completed. Place plugs in ends of uncompleted piping at end of day or whenever work stops.
B. Install storm water piping pitched to drain at minimum slope of 1/4" per foot (2%) for piping 3" and smaller, and 1/8" per foot (1%) for piping 4" and larger.
C. Install 1" thick extruded polystyrene over underground building drain piping not under building. Provide width to extend minimum of 12" beyond each side of pipe. Install directly over pipe, centered on pipe center line.

17. INSTALLATION OF PIPING SPECIALTIES:

A. Install piping specialties in accordance with requirements of Division-15 Basic Mechanical Materials and Methods section "Piping Specialties".

18. INSTALLATION OF SUPPORTS AND ANCHORS:

A. Install supports and anchors, in accordance with Division-15 Basic Mechanical Materials and Methods section "Supports and Anchors".

19. INSTALLATION OF BACKWATER VALVES:

A. Install backwater valves in storm water building drain piping as indicated, and as required by the local code of the Authority having jurisdiction. For interior installation, provide cleanout cover flush to floor centered over backwater valve cover, and of adequate size to remove valve cover for service.

20. INSTALLATION OF EXPANSION JOINTS:

A. Install expansion joints on vertical risers as indicated, and as required by the local code of the Authority having jurisdiction.

21. INSTALLATION OF DRAINAGE PIPING PRODUCTS:

A. Cleanouts: Install in conductor piping and storm building drain piping as indicated, as required by the local code of the Authority having jurisdiction; at each change in direction of piping greater than 45o; at minimum intervals of 50' for piping 4" and smaller and 100' for larger piping; and at base of each conductor. Install floor and wall cleanout covers for concealed piping, select type to match adjacent building finish.
B. Flashing Flanges: Install flashing flange and clamping device with each cleanout passing through waterproof membrane.

22. INSTALLATION OF ROOF DRAINS:

A. General: Install roof drains in accordance with manufacturer's written instructions and in locations indicated.
B. Coordinate flashing work with work of roofing, water-proofing and adjoining substrate work.
C. Coordinate with roofing as necessary to interface roof drains with roofing work.
D. Coordinate with storm water systems as necessary to interface drains with drainage piping systems.
E. Install roof drains at low points of surface areas to be drained, or as indicated.
F. Install drain flashing collar or flange so that no leakage occurs between roof drain and adjoining roofing. Maintain integrity of waterproof membranes, where penetrated.
G. Position roof drains so that they are accessible and easy to maintain.

23. FIELD QUALITY CONTROL:

A. Piping Tests: Test storm water systems in accordance with requirements of the local code of the Authority having jurisdiction.

24. ADJUSTING AND CLEANING:

A. Clean, flush, and inspect storm water piping in accordance with requirements of Division-15 Basic Mechanical Materials and Methods section "Pipes and Pipe Fittings".

25. PROTECTION:

A. Protect roof drains during remainder of construction period, to avoid clogging with construction materials and debris, and to prevent damage from traffic and construction work.

SECTION 15420 - PLUMBING EQUIPMENT

1. RELATED DOCUMENTS:

A. Drawings and general provisions of Contract, including General and Supplementary Conditions and Division-1 Specifications sections, apply to work of this section.

2. DESCRIPTION OF WORK:

A. This division of the work shall comprise the furnishing of all materials, equipment, tools, labor and transportation necessary for the complete installation of the plumbing systems shown and hereinafter specified. Work is to be complete in every respect whether specifically mentioned in contract documents or not. This work and material includes, but is not limited to, the following items:

1. Plumbing work including, but not limited to, complete systems of soil, waste and vent piping, domestic water service and distribution, backflow prevention requirements on both the service and individual appliances, natural gas service and distribution, plumbing fixtures, water heaters and roughing in and final connections of equipment furnished by the Owner or under other sections of the work.
2. Install water meter to meet the standards of the landlord/owner where applicable. Verify if the water meter is furnished by the landlord/owner or if a specific meter is required.

3. QUALITY ASSURANCE:

A. UL and NEMA Compliance: Provide electric motors and electrical components required as part of plumbing equipment, which have been listed and labeled by Underwriters Laboratories and comply with NEMA standards.
B. NEC Compliance: Comply with National Electrical Code (ANSI/NFPA 70) as applicable to installation and electrical connections of ancillary electrical components of plumbing equipment.
C. ANSI Compliance: Comply with ANSI Z223.1 (NFPA 54) "National Fuel Gas Code", as applicable to installation of gas-fired water heaters.
D. AGA and NSF Labels: Provide water heaters which have been listed and labeled by American Gas Association and National Sanitation Foundation.
E. ASME Code Symbol Stamps: For the following equipment, comply with ASME Boiler and Pressure Vessel Code for construction, and stamp with ASME Code symbol:

1. Commercial water heaters.

F. ASME Relief Valve Stamps: Provide water heaters with safety relief valves bearing ASME valve markings.
G. PDI Compliance: Comply with applicable Plumbing and Drainage Institute standards pertaining to grease interceptors.

4. SUBMITTALS:

A. Before submittal of all data, the Contractor shall check each piece of apparatus, equipment and accessory to insure compliance with requirements of the plans and specifications and shall clearly mark each submittal with his signature to indicate that they are in full compliance. Any submittals received without the Contractor's signature may be returned without being checked. It shall be the Contractor's responsibility to point out all deviations between the plans and specifications and the materials submitted.
B. Each set of data from any one manufacturer shall be bound in an individual folder properly indexed and marked to indicate job, Contractor, supplier and purpose for which data enclosed is being offered. Data submitted shall show proposed equipment only and shall not be catalogues showing a manufacturer's complete line. Each sheet shall indicate the name of manufacturer of the equipment being submitted. Sufficient data shall be included to prove compliance with the specifications as far as use, capacity, efficiencies, physical size, quality of materials and all other pertinent specified particulars.
C. Submittal data (manufacturers' catalog data) shall include the following:
1. Insulation.
2. Domestic water heaters.
3. Plumbing fixtures and trim.

5. COMMERCIAL GAS-FIRED WATER HEATERS:

A. Brinker International has an exclusive national account relationship with PVI Industries to supply water heaters and accessory products for all locations. Plumbing contractors are directed to call: the following representative for all equipment information, service issues, and to schedule certifications of install:

PVI, Industries
1 (800) 684-1656
Attn: Clayton McQuagge

B. Water heaters shall be ASME rated, of the seamless glass lined steel tank construction.
C. The heaters shall be suitable for sealed combustion direct venting using PVC pipe (in the diameters indicated on the drawings) for air intake and exhaust pipes. The heater shall be factory assembled and tested. The power burner shall be of a design that requires no special calibrations on start up. The heaters shall be approved for 0" clearances to combustibles.
D. The control shall be an integrated solid-state temperature and ignition control device with integral diagnostics, LED fault display capability and a digital display of temperature settings.
E. The tanks shall be foam insulated and equipped with an ASME rated temperature pressure relief valve. The water heater shall be UL listed and exceed the minimum efficiency requirements of ASHRAE/IES 90.1-2013 and current energy codes.
F. The heater shall be listed by SCAQMD Rule 1146.2 Low Nox.
G. The expansion tank shall be ASME rated. Equipment manufacturer shall confirm size for water heater capacities, water pressure, and given site with respect to maintaining water heater warranty.
H. Temperature alarm kit shall be PVI. Alarm light shall alert personnel when hot water temperature falls below an adjustable set-point of 100 - 110 degrees F.

6. GREASE INTERCEPTORS:

A. General: Provide cast concrete grease interceptors as detailed on the drawings.

7. INSTALLATION OF GAS-FIRED WATER HEATERS:

A. The Installing Contractor shall be responsible for coordinating release of water heaters and accessories for delivery with the manufacturer.
B. Provide a complete water heating system as shown and required by A.H.J.
C. Each domestic water heater shall be installed in accordance with the requirements of all governing authorities, and the recommendations of the equipment manufacturer.
D. Water heater manufacturer shall perform on-site inspection of water heater system. The Installing Contractor shall schedule the manufacturer to perform on-site inspection on the water heater system not later than two weeks prior to contract completion date, and shall obtain manufacturer's certification prior to contract completion date. Reference section 3.1 F for check list of items manufacturer will be requiring for the inspection.
E. The cost of one inspection is included in the equipment purchase price from the manufacturer. The cost of any subsequent inspections necessary to confirm correction of installation deficiencies as required for manufacturer's Certification is the responsibility of the installing Contractor.
F. Install system on a 4" housekeeping pad, unless specifically indicated otherwise on the plans.
G. Maintain manufacturer's recommended clearances and arrange units to that controls and device that require adjustment and service are accessible. Install gas piping, shut-off valves, dirt legs, regulators (where required), unions, etc. according to NFPA 54.
I. PVI Certification check list (see below):

Certification Photo Sign Off

LOCATION

Restaurant Name:

Store #:

Street Address:

City: State: Zip Code:

Phone:

Model: Correct Photo

Serial:

Model:

Serial:

Condensate Trap Correct PIC

(Must be Sch. 40 PVC – No "S" Traps or Running Traps Allowed. Use stand off's to brace lines above floor drains/sinks)

Venting Correct PIC

(Ability to trace both exhaust and make-up air vent piping from heater to outside termination point, at either the roof or exterior wall)

Gas Piping Correct PIC

(Must see drip leg for each unit)

Thermometers Correct PIC

(One on each within 12 inches of the hot outlet)

Manifold Equally Balanced PIC

(Picture from the doorway displaying hot and cold water manifold)

Dielectric Unions Installed PIC

(One on each inlet and outlet)

Insulation Installed

(Reinsulate all exposed water lines with fiberglass pipe or black closed cell foam. Black foam insulation is acceptable below the union) PIC

Drain Lines Installed

(For heater, water softener, T&P valve and condensate. Securely braced with stand-offs above floor drain/sink) PIC

NWS Alarm Lights Installed

(One transformer, one sensor, one HAL box per heater. New installs mount above food pass through shelf) PIC

Heaters Elevated on Blocks (Stand is also acceptable) PIC

Correct Expansion Tank PIC

(Check valve installed between expansion tank and water softener)

Circulation Pump PIC

(New circulation pump should be installed unless it has been replaced within the last three months)

Note: Expansion tank(s) must be ASME and charged at least 10 lbs. above system pressure measured at water heaters.

Approved for Certification:

8. FLAME SPREAD PROPERTIES OF MATERIALS

A. Materials used on this project shall each have a flame spread rating of 25 or less, and a smoke developed rating of 50 or less, as determined by an independent testing laboratory in accordance with NFPA-255.

9. FIRESTOPPING

A. Provide firestopping in sealing of penetrations in fire-rated construction, horizontal and vertical, including the following materials:
1. Foam: 3M Firestop silicone RTV foam, CAT #2001 liquid component Part A (black) and liquid component Part B (off-white).
2. Sealant: 3M Firestop RTV silicone adhesive sealant, CAT #2000.
3. Damming Materials: Mineral fiberboard, mineral fiber matting, mineral fiber putty, plywood or particle board, as selected by the applicator.
B. Mixes shall conform to the manufacturer's directions.

10. DIELECTRIC CONNECTIONS

A. Connections between dissimilar metal piping systems, and between ferrous piping systems and non-ferrous connections to equipment shall be made by the use of dielectric unions, couplings or flanges as manufactured by Crane, Epco, F.M. Maloney, or Universal Manufacturing Co.

11. INSTALLATION OF INTERCEPTORS:

A. General: Install interceptors as indicated, in accordance with the detail on the drawings, and local codes and ordinances.

SECTION 15440 - PLUMBING FIXTURES

1. RELATED DOCUMENTS:

A. Drawings and general provisions of Contract, including General and Supplementary Conditions and Division-1 Specification sections, apply to work of this section.
B. Division-15 Basic Mechanical Materials and Methods sections apply to work of this section.

2. DESCRIPTION OF WORK:

A. Extent of plumbing fixtures work required by this section is indicated on drawings and schedules, and by requirements of this section.
B. Types of plumbing fixtures specified in this section include the following:

Water closets.
Urinals.
Lavatories.
Service sinks.
Stainless steel sinks.

C. Refer to Division-15 sections for potable water systems used in conjunction with plumbing fixtures; not work of this section.
D. Refer to Division-15 sections for soil and waste systems used in conjunction with plumbing fixtures; not work of this section.

3. QUALITY ASSURANCE:

A. Manufacturer's Qualifications: Firms regularly engaged in manufacture of plumbing fixtures of type, style and configuration required, whose products have been in satisfactory use in similar service for not less than 3 years.
B. Codes and Standards:

1. Plumbing Fixture Standards: Comply with applicable portions of the adopted code of the Authority having jurisdiction pertaining to materials and installation of plumbing fixtures.
2. ANSI Standards: Comply with applicable ANSI standards pertaining to plumbing fixtures and systems.
3. PDI Compliance: Comply with standards established by PDI pertaining to plumbing fixture supports.
4. Federal Standards: Comply with applicable FS WW-P-541/-Series sections pertaining to plumbing fixtures.
5. ANSI Compliance: Construct and install barrier-free plumbing fixtures in accordance with Americans with Disabilities Act.

4. SUBMITTALS:

A. Product Data: Submit to the Architect the manufacturer's technical product data, including rated capacities of selected model clearly indicated, furnished specialties and accessories; and installation instructions.

5. PLUMBING FIXTURES:

A. General: Provide factory-fabricated fixtures of type, style, and material indicated. For each type fixture, provide fixture manufacturer's standard trim, carrier, seats, and valves as indicated by their published product information; either as designed and constructed, or as recommended by manufacturer, and as required for complete installation. Where more than one type is indicated, selection is Installer's option; but, all fixtures of same type must be furnished by single manufacturer. Where type is not otherwise indicated, provide fixtures complying with governing regulations.

6. MATERIALS:

A. General: Unless otherwise specified, comply with applicable Federal Specification WW-P-541/-Series sections pertaining to plumbing fixtures, fittings, trim, metals, and finishes. Comply with requirements of WW-P-541/-specification relative to quality of ware, glazing, enamel, composition and finish of metals, air gaps, and vacuum breakers, even though some plumbing fixtures specified in this section are not described in WW-P-541/-specification.
B. Provide materials which have been selected for their surface flatness and smoothness. Exposed surfaces which exhibit pitting, seam marks, roller marks, foundry sand holes, stains, decoloration, or other surface imperfections on finished units are not acceptable.
C. Where fittings, trim and accessories are exposed or semi-exposed provide bright chrome-plated or polished stainless steel units. Provide copper or brass where not exposed.
D. Stainless Steel Sheets: ASTM A 167, Type 302/304, hardest workable temper.
E. Finish: No. 4, bright, directional polish on exposed surfaces.
F. Vitreous China: High quality, free from fire cracks, spots, blisters, pinholes and specks; glaze exposed surfaces, and test for crazing resistance in accordance with ASTM C 554.
G. Synthetic Stone: High quality, free from defects, glaze on exposed surfaces, stain resistant.

7. PLUMBING FITTINGS, TRIM, AND ACCESSORIES:

A. Water Outlets: At locations where water is supplied (by manual, automatic or remote control), provide commercial quality faucets, valves, or dispensing devices, of type and size indicated, and as required to operate as indicated. Include manual shutoff valves and connecting stem pipes to permit outlet servicing without shut-down of water supply piping systems.
B. Vacuum Breakers: Provide with flush valves where required by governing regulations, including locations where water outlets are equipped for hose attachment.
C. P-Traps: Include removable P-traps where drains are indicated for direct connection to drainage system.
D. Carriers: Provide cast-iron supports for fixtures of either graphitic gray iron, ductile iron, or malleable iron as indicated.
E. Fixture Bolt Caps: Provide manufacturer's standard exposed fixture bolt caps finished to match fixture finish.
F. Escutcheons: Where fixture supplies and drains penetrate walls in exposed locations, provide chrome-plated cast-brass escutcheons with set screw.
G. Aerators: Provide aerators of types specified in the construction drawings.
H. Comply with additional fixture requirements contained in fixture schedule attached to this section.

8. INSTALLATION OF PLUMBING FIXTURES:

A. General: Install plumbing fixtures of types indicated where shown and at indicated heights; in accordance with fixture manufacturer's written instructions, roughing-in drawings, and with recognized industry practices. Ensure that plumbing fixtures comply with requirements and serve intended purposes. Comply with applicable requirements of the adopted code of the Authority having jurisdiction pertaining to installation of plumbing fixtures.
B. Fasten plumbing fixtures securely to indicated supports or building structure; and ensure that fixtures are level and plumb. Secure plumbing supplies behind or within wall construction so as to be rigid, and not subject to pull or push movement.

9. ADJUSTING AND CLEANING:

A. Clean plumbing fixtures, trim, and strainers of dirt and debris upon completion of installation.
B. Adjust water pressure at faucets and flush valves to provide proper flow stream and specified gpm.

SECTION 15488 - NATURAL GAS SYSTEMS

1. RELATED DOCUMENTS:

A. Drawings and general provisions of Contract, including General and Supplementary Conditions and Division-1 Specifications sections, apply to work of this section.
B. Division-15 Basic Mechanical Materials and Methods sections apply to work of this section.

2. DESCRIPTION OF WORK:

A. Extent of natural gas systems work, is indicated on drawings and schedules, and by requirements of this section.
B. Trenching and backfill required in conjunction with gas service piping is specified in applicable Division-2 sections, and is included as work of this section.
C. Refer to Division-2 sections for trenching and backfill required in conjunction with gas service piping; not work of this section.

3. CODES AND STANDARDS:

A. ANSI Compliance: Fabricate and install natural gas piping in accordance with ANSI B31.2 "Fuel Gas Piping".
B. NFPA Compliance: Fabricate and install natural gas systems in accordance with NFPA 54 "Natural Fuel Gas Code".
C. Utility Compliance: Fabricate and install natural gas systems in accordance with local gas utility company.

4. SUBMITTALS:

A. Product Data: Submit manufacturer's technical product data and installation instructions for natural gas systems materials and products.

5. MATERIALS AND PRODUCTS:

A. General: Provide piping materials and factory-fabricated piping products of sizes, types, pressure ratings, and capacities as indicated. Where not indicated, provide proper selection as determined by Installer to comply with installation requirements. Provide materials and products complying with NFPA 54 where applicable, base pressure rating on natural gas piping system maximum design pressures. Provide sizes and types matching piping and equipment connections; provide fittings of materials which match pipe materials used in natural gas systems. Where more than one type of materials or products are indicated, selection is Installer's option.

6. BASIC IDENTIFICATION:

A. General: Provide identification complying with Division-15 Basic Mechanical Materials and Methods section"Mechanical Identification", in according with the following listing:

1. Building Distribution Piping: Plastic pipe markers.
2. Gas Service: Underground-type plastic line markers.
3. Gas Valves: Plastic valve tags.

7. BASIC PIPES AND PIPE FITTINGS:

A. General: Provide pipes and pipe fittings complying with Division-15 Basic Mechanical Materials and Methods section "Pipes and Pipe Fittings", in accordance with the following listing:
B. Building Distribution Piping:

1. Pipe Size 2" and Smaller: Black steel pipe; Schedule 40, malleable-iron threaded fittings.
2. Pipe Size 2-1/2" and Larger: Black steel pipe; Schedule 40; wrought-steel buttwelding fittings.

8. BASIC PIPING SPECIALTIES:

A. General: Provide piping specialties complying with Division-15 Basic Mechanical Materials and Methods section "Piping Specialties", in accordance with the following listing:

1. Pipe escutcheons.
2. Dielectric unions.
3. Pipe sleeves.
4. Sleeve seals.

9. BASIC SUPPORTS AND ANCHORS:

A. General: Provide supports and anchors complying with Division-15 Basic Mechanical Materials and Methods section "Supports and Anchors", in accordance with the following listing:

1. Adjustable swivel pipe rings for horizontal-piping hangers and supports.
2. Two-bolt riser clamps for vertical piping supports.
3. Concrete inserts, C-clamps, and steel brackets for building attachments.
4. Side beam clamps.

10. SPECIAL VALVES:

A. General: Special valves required for natural gas systems include the following types:
B. Gas Cocks:

1. Gas Cocks 2" and Smaller: 150 psi non-shock WOG, bronze straightway cock, flat or square head, threaded ends.
2. Gas Cocks 2-1/2" and Larger: 125 psi non-shock WOG, iron body bronze mounted, straightway cock, square head, flanged ends.

C. Control Valves:

1. Master Gas Control Valve: Bronze body, packless, single seat, manually operated, normally closed, UL-approved.

D. Manufacturer: Subject to compliance with requirements, provide control valves of one of the following:

1. Automatic Switch Co.

11. PRESSURE REGULATING VALVES:

A. General: Provide single stage, steel jacketed, corrosion-resistant gas pressure regulators; with atmospheric vent, elevation compensators; with threaded ends for 2" and smaller, flanged ends for 2-1/2" and larger; for inlet and outlet gas pressures, specific gravity, and volume flow indicated.

12. GAS METER:

A. General: Provide diaphragm-type, positive displacement gas meters with aluminum cases, temperature compensated, with internal corrosion-resistant components; threaded ends for 2" and smaller, flanged ends for 2-1/2" and larger; for gas working pressures, specific gravity, and volume flow indicated.

13. INSPECTION:

A. General: Examine areas and conditions under which natural gas systems materials and products are to be installed. Do not proceed with work until unsatisfactory conditions have been corrected in manner acceptable to Installer.

14. INSTALLATION OF BASIC IDENTIFICATION:

A. General: Install mechanical identification in accordance with Division-15 Basic Mechanical Materials and Methods section "Mechanical Identification".

15. INSTALLATION OF NATURAL GAS PIPING:

A. General: Install natural gas piping in accordance with Division-15 Basic Mechanical Materials and Methods section "Pipes and Pipe Fittings".
B. Use sealants on metal gas piping threads which are chemically resistant to natural gas. Use sealants sparingly, and apply to only male threads of metal joints.
C. Remove cutting and threading burrs before assembling piping.
D. Do not install defective piping or fittings. Do not use pipe with threads which are chipped, stripped, or damaged.
E. Plug each gas outlet, including valves, with threaded plug or cap immediately after installation and retain until continuing piping, or equipment connections are completed.
F. Ground gas piping electrically and continuously within project, and bond tightly to grounding connection.
G. Install drip-legs in gas piping where indicated, and where required by code or regulation.
H. Install "Tee" fitting with bottom outlet plugged or capped, at bottom of pipe risers.
I. Use dielectric unions where dissimilar metals are joined together.
J. Install piping with 1/64" per foot (1/8%) downward slope in direction of flow.
K. Install piping parallel to other piping, but maintain minimum of 12" clearance beteeen gas piping and steam or hydronic piping above 200oF (93oC).
L. Insulate gas piping exposed to freezing temperatures.
M. For piping underground beneath buildings, install in welded conduit. Extend conduit inside and terminate in accessible portion of building and seal. Extend conduit outside minimum of 4" from building, and vent above grade.
N. Fire risers running through concrete or asphalt, install through minimum 6" pipe sleeve. Fill annular space with gravel.
O. Install magnesium anodes for underground steel pipe, one-5 lb. anode for up to 100' in length and one-5 lb. anode for each additional 100'.
P. Install magnesium anodes for each underground steel or malleable iron fitting, isolated between 2 sections of plastic pipe; one-3 lb. anode for each fitting.
Q. All gas piping installed at the meter assembly and visible from the site shall be field painted for corrosion protection to match the exterior wall.
R. All gas piping installed on the roof and not visible from the site shall be field painted for corrosion protection, yellow for identification.
S. All gas piping installed on the roof and not visible from the site shall be field painted for corrosion protection, yellow for identification.

16. GAS SERVICE:

A. General: Arrange with Utility Company to provide gas service to indicated location with shutoff at terminus. Consult with Utility as to extent of it's work, costs, fees, and permits involved. Pay such costs and fees; obtain permits.
B. Extend service piping from Utility's terminus to inside building wall, under Utility's direction.
C. Provide shutoff outside building where indicated, in adjustable gas service valve box, with cover set flush to finished grade.

17. INSTALLATION OF PIPING SPECIALTIES:

A. Install piping specialties in accordance with Division-15 Basic Mechanical Materials and Methods section "Piping Specialties".

18. INSTALLATION OF SUPPORTS AND ANCHORS:

A. Install supports and anchors in accordance with Division-15 Basic Mechanical Materials and Methods section "Supports and Anchors".

19. INSTALLATION OF VALVES:

A. Gas Cocks: Provide at connection to gas train for each gas-fired equipment item; and on risers and branches where indicated.
B. Locate gas cocks where easily accessible, and where they will be protected from possible injury.
C. Control Valves: Install as indicated. Refer to Division 16 for wiring; not work of this section.
D. Pressure Regulating Valves: Install as indicated; comply with Utility requirements. Pipe atmospheric vent to outdoors, full size of outlet. Install gas shutoff valve upstream of each pressure regulating valve.

20. INSTALLATION OF GAS METER:

A. Install gas meter in accordance with local Utility company's installation instructions, and comply with requirements.

1. Hang meter on wall brackets in conformance with gas utility instructions.

21. EQUIPMENT CONNECTIONS:

A. General: Connect gas piping to each gas-fired equipment item, with drip leg and shutoff gas cock. Comply with equipment manufacturer's instructions.
B. General: Provide gas piping runout within 5' of each gas-fired equipment item gas connection; provide drip leg and gas cock. Final connection is equipment installation work; not work of this section.

22. FIELD QUALITY CONTROL:

A. Piping Tests: Inspect, test, and purge natural gas systems in accordance with NFPA 54, and local utility requirements.

23. ADJUSTING AND CLEANING:

A. Cleaning and Inspecting: Clean and inspect natural gas systems in accordance with Division-15 Basic Mechanical Materials and Methods section "Pipes and Pipe Fittings".

SECTION 15781 - PACKAGED HEATING AND COOLING UNITS

INSTRUCTIONS TO BIDDERS

Brinker International has an exclusive national account relationship with Lennox Industries to supply HVAC products for all locations. HVAC contractors are directed to call Lennox National Accounts for all pricing and equipment information.

1. RELATED DOCUMENTS:

A. Drawings and general provisions of Contract, including General and Supplementary Conditions and Division-1 Specification sections, apply to work of this section.
B. Division-15 Basic Mechanical Materials and Methods sections apply to work of this section.

2. DESCRIPTION OF WORK:

A. Extent of packaged heating and cooling units work required by this section is indicated on drawings and schedules, and by requirements of this section.
B. Types of packaged heating and cooling units specified in this section include the following:

1. Packaged heating and cooling units, 20 tons and smaller.

C. Electrical Work: Provide the following wiring as work of this section, in accordance with requirements of Division 16:

1. Provide control wiring between unit-mounted control panel and thermostats, remote control panels, and any other control device furnished as work of this section.
2. Provide factory-mounted and wired controls and electrical devices as specified in this section.

D. Refer to Division-16 sections for other electrical work including motor starters, disconnects, wires/cables, raceways, and other required electrical devices; not work of this section.

3. CODES AND STANDARDS:

A. ARI Compliance: Provide capacity ratings for packaged heating and cooling units in accordance with ARI Standard 210 for Unitary Air Conditioning and Air Source Heat Pump Equipment.
B. UL Compliance: Provide packaged heating and cooling units which are UL-listed and labeled.

4. SUBMITTALS:

A. Product Data: Submit manufacturer's to the Architect the technical product data, including rated capacities of selected model clearly indicated, weights, furnished specialties and accessories; and installation and start-up instructions.

5. DELIVERY, STORAGE, AND HANDLING:

A. Handle packaged heating and cooling units and components carefully to prevent damage, breaking, denting, and scoring. Do not install damaged packaged heating and cooling units or components; replace with new.
B. Store packaged heating and cooling units and components in clean dry place. Protect from weather, dirt, fumes, water, construction debris, and physical damage.
C. Comply with manufacturer's rigging and installation instructions for unloading packaged heating and cooling units, and moving units to final location for installation.

6. SPECIAL PROJECT WARRANTY:

A. Warranty on Motor/Compressor: Provide written warranty, direct from the manufacturer, agreeing to replace, within warranty period, motors/compressors with inadequate and defective materials and workmanship, including leakage, breakage, improper assembly, or failure to perform as required; provided manufacturer's instructions for handling, installing, protecting, and maintaining units have been adhered to during warranty period. Replacement is limited to component replacement only, and does not include labor for removal and reinstallation.
B. Warranty Period: 5 years from Date of Opening Day for the restaurant.

7. PACKAGED HEATING AND COOLING UNIT

A. General: Provide factory-assembled and tested packaged units as indicated, consisting of casing, compressor, evaporator, fans, filters, and unit controls. Units shall be specifically designed for outdoor installation on a concrete pad and be completely factory assembled and tested, piped, internally wired, and shipped in one piece. All units shall be factory run tested. Provide capacities and electrical characteristics as scheduled.
B. Casing: Provide heavy gauge, zinc clad corrosion protection coated, casing construction, and baked enamel exterior finish. Refer to details on the drawings for ductwork connections. Provide removable panels and/or access doors for inspection and access to internal parts. Insulate casing with 1/2" thick minimum thermal insulation, and compressor compartment with acoustical insulation. Provide knockouts for electrical and piping connections.
C. Refrigeration Circuit: Provide refrigerant thermal expansion valve for refrigerant control. See the sequence of operation on the plans.
D. Compressors: Provide welded shell, hermetic compressors, 3,600 rpm; or serviceable hermetic compressors, 1750 rpm. Provide crankcase heaters.
E. Evaporator Coil: Construct of copper tubing and aluminum fins, pressure and leak tested at 1.5 times working pressure.
F. Fans: Provide double-inlet, forward curved, centrifugal fans with adjustable belt drive. Provide permanently lubricated fan and motor bearings, and thermal overloads in motor.
G. Filters: Provide 1" thick throwaway filters during construction, and change to full pleated filters at store turnover.

ARCHITECT:

DAVID SCOTT WINDLE, AIA

6201 CAMPUS CIRCLE DRIVE E.
IRVING, TEXAS 75038
TEL: 972.870.1288
WWW.IDSTUDIO4.COM
E-MAIL scottw@idstudio4.com

CORPORATE:
BRINKER RESTAURANT CORPORATION,
A VIRGINIA CORPORATION
3000 OLYMPUS BLVD.
DALLAS, TEXAS 75019
972.980.9917
www.brinker.com

09/23/2024
ISSUE FOR BID
THESE DOCUMENTS ARE FOR BIDDING PURPOSES ONLY. DO NOT USE FOR CONSTRUCTION.

RESTAURANT #CH1679
PROTOTYPE 18.5FS

CHILI'S TOOELE
951 N MAIN STREET
TOOELE, UT 84074

CLIENT: BRINKER RESTAURANT CORP.
A VIRGINIA CORPORATION

DATE	DESCRIPTION
6/27/2024	ISSUE FOR PERMIT
9/23/2024	ISSUE FOR BID

	DATE	DESCRIPTION

PROJECT NUMBER:
CHI24007

SHEET TITLE:
SPECIFICATIONS
15413 - 15781

SHEET NUMBER:
SP113

H. Air-Cooled Condensers: Provide condenser coil constructed of copper tubes and aluminum fins. Factory leak-test at 1.5 times working pressure, dehydrate and provide full charge of refrigerant. Provide subcooler and accumulator.
I. Condenser Fan: Provide propeller type condenser fans with vertical discharge. Condenser fan motor shall be totally enclosed and permanently lubricated.

8. INSPECTION:

A. General: Examine areas and conditions under which packaged heating and cooling units are to be installed. Do not proceed with work until unsatisfactory conditions have been corrected in manner acceptable to Installer.

9. INSTALLATION OF PACKAGED HEATING AND COOLING UNITS:

A. General: Install packaged heating and cooling units in accordance with manufacturer's installation instructions. Install units plumb and level, firmly anchored in locations indicated, and maintain manufacturer's recommended clearances.
B. Electrical Wiring: Install electrical devices furnished by manufacturer but not specified to be factory-mounted. Furnish copy of manufacturer's wiring diagram submittal to electrical installer.
C. Verify that electrical wiring installation is in accordance with manufacturer's submittal and installation requirements of Division-16 sections. Do not proceed with equipment start-up until wiring installation is acceptable to equipment installer.
D. Ductwork: Refer to Division-15 section "Ductwork". Connect supply and return ducts to unit with flexible duct connections. Provide transitions to exactly match unit duct connection size.
E. Drain Piping: Connect unit drain as indicated on the drawings. Provide trap at drain pan; construct as indicated on the drawings.

10. FIELD QUALITY CONTROL:

A. General: Start-up packaged heating and cooling units, in accordance with manufacturer's start-up instructions. Test controls and demonstrate compliance with requirements. Replace damaged or malfunctioning controls and equipment, including combing out of fins that may have been dented during construction.

11. CLOSEOUT PROCEDURES:

A. Training: Provide services of manufacturer's technical representative for 1-half day to instruct Owner's personnel in operation and maintenance of each type of packaged heating and cooling unit.

SECTION 15841 - LOW PRESSURE DUCTWORK

1. RELATED DOCUMENTS:

A. Drawings and general provisions of Contract, including General and Supplementary Conditions and Division-1 Specification sections, apply to work of this section.

2. DESCRIPTION OF WORK:

A. Extent of low pressure ductwork is indicated on drawings and in schedules, and by requirements of this section. Low pressure ductwork is hereby defined as ductwork subjected to velocities of 2500 fpm or less, and operating pressure of 2" w.g. or less, positive or negative, constructed in accordance with SMACNA standards.
B. Types of low pressure ductwork required for project include the following:
   1. Heating supply and return air systems.
   2. Air-conditioning supply and return air systems.
   3. Fresh air supply systems.
   4. Mechanical exhaust systems.
   5. Kitchen exhaust systems.
C. External Insulation for concealed low pressure ductwork is specified in Division-15 insulation sections, and is included as work of this section.
D. Refer to Division-15 insulation sections for external insulation required in conjunction with low pressure ductwork; not work of this section.

3. QUALITY ASSURANCE:

A. SMACNA Standards: Comply with SMACNA "HVAC Duct Construction Standards, Metal and Flexible, 2005" for fabrication and installation of low pressure ductwork.
B. NFPA Compliance: Comply with ANSI/NFPA 90A "Standard for the Installation of Air-Conditioning and Ventilating Systems" and ANSI/NFPA 90B "Standard for the Installation of Warm Air Heating and Air-Conditioning Systems". Comply with NFPA 96 for grease exhaust systems.
C. Field Reference Manual: Have available at project field office, copy of SMACNA "HVAC Duct Construction Standards, Metal and Flexible, 2005".
D. Fabric duct must be Classified by Underwriter's Laboratories in accordance with the 25/50 flame spread/smoke development requirements of NFPA 90-A and UL 2518. Also Classified by UL-C (Canada) S102.2, BS 5867 Part 2, 1980; GB8624-2006. All product sections must be labeled with the logo and classification marking of Underwriter's Laboratories.
E. Comply with the requirements of the the adopted code of the Authority having jurisdiction.

4. SHEETMETAL DUCTWORK MATERIALS:

A. Except as otherwise indicated, fabricate rigid HVAC ductwork from new, prime grade, continuous hot dip mill galvanized sheet steel complying with ANSI/ASTM A 527, lockforming quality, with ANSI/ASTM A 525, G90 zinc coating; mill phosphatized for exposed locations.
B. Where ducts exposed to view pass through walls, floors or ceilings, provide sheet metal collars to cover voids around the ducts.
C. Rectangular low-pressure ducts shall be constructed, braced and reinforced in accordance with SMACNA Standards.
D. All round low-pressure ducts shall be snap lock (sealed) shop-fabricated round ducts constructed, braced and reinforced in accordance with SMACNA Standards.
E. Square and round elbows shall be constructed in accordance with the SMACNA Standards. Elbows not constructed with a center-line radius of at least 150% of the duct width or diameter, shall be provided with turning vanes in accordance with SMACNA Standards.
F. "Fiberboard" ductwork will NOT be accepted on project.
G. Seal all ductwork as required by local mechanical and energy codes. Pressure sensitive tape shall not be used unless certified to comply with UL-181A or UL-181B.

5. FLEXIBLE DUCTWORK MATERIALS:

A. Except as otherwise indicated, flexible ductwork shall be similar to Thermoflex: Type M-KE. Flexible ducts shall comply with applicable requirements of UL-181, NFPA 90-A and other governing authorities.
B. Flexible ducts shall be factory-insulated with a nominal 1-inch thickness of fiberglass insulation, producing a thermal conductance ("C") of 0.23. Ducts shall have a positive interior air seal permanently bonded to a coated high carbon spring steel helix, all sheathed in an outer vapor barrier of fiberglass reinforced film laminate.
C. Flexible ducts shall be rated for operating pressure of + 6 inches wg through 10-inch diameter, +4 inches wg through 16-inch diameter and - 2 inches wg in all sizes.
D. Flexible ducts shall be limited to 6'-0" lengths.

6. TEXTILE/FABRIC DUCTWORK MATERIALS:

A. FabricAir, Inc. Model COMBI-70 permeable, fire retardant duct dispersion system complete with type 8 "All-in-One" suspension system, airflow straightenters, zippered end cap, SonicFlow hole air dispersion, and installation hardware. COMBI-70 fabric air dispersion system is U.L. 723 classified, produced in an ISO 9001 quality management system, and provided with a 10 year warranty. Fabric duct and accessories shall be #3004 black in color.
B. Manufacturer:

   FabricAir®

   Randy Harvey

   Phone: (817) 304-2577

   Email: rha@fabricair.com
   www.fabricair.com

7. MISCELLANEOUS DUCTWORK MATERIALS:

A. General: Provide miscellaneous materials and products of types and sizes indicated and, where not otherwise indicated, provide type and size required to comply with ductwork system requirements including proper connection of ductwork and equipment.
B. Duct Sealant: Non-hardening, non-migrating mastic or liquid elastic sealant (type applicable for fabrication/installation detail) as compounded and recommended by manufacturer specifically for sealing joints and seams in ductwork.
C. Duct Cement: Non-hardening migrating mastic or liquid neoprene based cement (type applicable for fabrication/installation detail) as compounded and recommended by manufacturer specifically for cementing fitting components, or longitudinal seams in ductwork.
D. Ductwork Support Materials: Except as otherwise indicated, provide hot-dipped galvanized steel fasteners, anchors, rods, straps, trim and angles for support of ductwork.
E. Flexible Duct Fabric Materials: Provide Ventfabrics "Ventglas" or equal, 30 oz/yd2, between sheet metal ducts and air handling equipment, including all fans and power roof-type ventilators.

8. DUCT LINER:

A. All return air ductwork and exposed supply air ductwork shall be lined to the extent indicated on drawings.
B. Ductliner shall be 1-inch acoustical duct lining in accordance with SMACNA Standards. Duct lining shall be Owens-Corning Fiberglas "Aeroflex" No. 200 or equal.
   1. The liner shall be applied to the inside of the duct with heavy-density side to the air stream, and shall be secured to the duct with Insul-Coustic No. 225 or equal, non-flammable, UL listed adhesive completely coating the clean sheet metal. The liner shall be further secured with Gripnail or Durodyne mechanical fasteners. Metal nosings shall be installed to secure liner at up-stream traverse edges where required by SMACNA Standard or the manufacturer's instructions. The clips shall be pointed up with adhesive.
   2. Dimensions given on the Drawings are net internal dimensions inside the insulation; sheetmetal dimensions shall be increased to allow for the thickness of the duct liner (i.e., for a duct liner thickness of 1-inch, increase each duct dimension by 2 inches.
   3. Minimum installed R-Value shall be R-5.

9. FABRICATION:

A. Shop fabricate ductwork in 4, 8, 10 or 12-foot lengths, unless otherwise indicated or required to complete runs. Pre-assemble work in shop to greatest extent possible, so as to minimize field assembly of systems. Disassemble systems only to extent necessary for shipping and handling. Match-mark sections for re-assembly and coordinated installation.
B. Shop fabricate ductwork of gages and reinforcement complying with the latest edition of the SMACNA "HVAC Duct Construction Standards, Metal and Flexible".
C. Fabricate duct fittings to match adjoining ducts, and to comply with duct requirements as applicable to fittings. Except as otherwise indicated, fabricate elbows with center-line radius equal to associated duct width; and fabricate to include turning vanes in elbows where shorter radius is necessary. Limit angular tapers to 30o for contracting tapers and 20o for expanding tapers.
D. Fabricate ductwork with accessories installed during fabrication to the greatest extent possible. Refer to Division-15 section "Duct Accessories" for accessory requirements.

10. FACTORY-FABRICATED DUCTWORK:

A. General: Provide factory-fabricated duct and fittings.
B. Material: Galvanized sheet steel complying with ASTM A 653 and A924.
C. Gage: 28 ga. minimum for round and oval ducts and fittings, 4" through 24" diameter.
D. Joint sealing shall be rated to meet SMACNA's Leakage Class 3.
E. Elbows: One piece construction for 90o and 45o elbows 14" and smaller. Provide multiple gore construction for larger diameters with standing seam circumferential joint.
F. Divided Flow Fittings: 90o tees, constructed with saddle tap spot welded and bonded to duct fitting body.

11. KITCHEN EXHAUST DUCTS:

A. General: Kitchen exhaust ducts and supports, used for smoke and vapor removal from cooking equipment, shall be field fabricated, furnished and installed by the mechanical contractor.
B. Fire Rated Duct Wrap Insulation:
   1. 3M Fire Barrier Duct Wrap 615: Lightweight, non-asbestos, high temperature, bio-soluble, calcium-magnesium-silicate (CMS) woven wool blanket, encapsulated in a scrim-reinforced foil, blanket thickness of 1.5 inches for ventilation duct applications.

      Ventilation Air Ducts: UL Design No. V-27

   2. 3M Fire Barrier Duct Wrap 15A: non-asbestos, biosoluble, patented inorganic fire resistant blanket encapsulated with a scrim-reinforced foil, blanket thickness of 1.5 inches for kitchen exhaust grease duct applications. Products supplied by 3M Fire Protection Products to the following system design Listings for the intended application:

      Kitchen Exhaust Grease Ducts: Intertek Design Listing No's. GD 531 F, GD 547 F, GD 556 F or GD 557 F.

      Firestop Listings: UL Design Nos. W-L-7180, W-J-7104, C-AJ-7096.

   3. 3M Fire Barrier Duct Wrap 20A: non-asbestos, biosoluble, patented inorganic fire resistant blanket encapsulated with a scrim-reinforced foil, blanket thickness of 2.0 inches for kitchen exhaust grease duct applications. Products supplied by 3M Fire Protection Products to the following system design Listings for the intended application:

      Kitchen Exhaust Grease Ducts: Intertek Design Listing No's. GD 531 F, GD 547 F, GD 556 F or GD 557 F.

      Firestop Listings: UL Design Nos. W-L-7180, W-J-7104, C-AJ-7096.

   4. 3M St. Paul, MN (800) 328-1687.

12. INSTALLATION OF DUCTWORK:

A. General: Assemble and install ductwork in accordance with recognized industry practices which will achieve air tight (5% leakage) and noiseless (no objectionable noise) systems, capable of performing each indicated service. Install each run with minimum of joints. Align ductwork accurately at connections, within 1/8" misalignment tolerance and with internal surfaces smooth. Support ducts rigidly with suitable ties, braces, hangers and anchors of type which will hold ducts true-to-shape and to prevent buckling.
B. Seal ductwork, after installation, to seal class recommended, and method prescribed in the latest edition of the SMACNA "HVAC Duct Construction Standards, Metal and Flexible".
C. Install concrete inserts for support of ductwork in coordination with formwork, as required to avoid delays in work.
D. Complete fabrication of work at project as necessary to match shop-fabricated work and accommodate installation requirements.
E. Locate ductwork runs, except as otherwise indicated, vertically and horizontally and avoid diagonal runs wherever possible. Locate runs as indicated by diagrams, details and notations or, if not otherwise indicated, run ductwork in shortest route which does not obstruct useable space or block access for servicing building and its equipment. Hold ducts close to walls, overhead construction, columns, and other structural and permanent-enclosure elements of building. Limit clearance to 1/2" where furring is shown for enclosure or concealment of ducts, but allow for insulation thickness, if any. Where possible, locate insulated ductwork for 1" clearance outside of insulation. Wherever possible in finished and occupied spaces, conceal ductwork from view, by locating in mechanical shafts, hollow wall construction or above suspended ceilings. Do not encase horizontal runs in solid partitions, except as specifically shown. Coordinate layout with suspended ceiling and lighting layouts and similar finished work.
F. Electrical Equipment Spaces: Do not run ductwork through transformer vaults and their electrical equipment spaces and enclosures.
G. Where ducts pass through interior partitions and exterior walls, conceal space between construction opening and duct or duct-plus insulation with sheet metal flanges of same gage as duct. Overlap opening on 4 sides by at least 1-1/2".
H. Coordinate duct installations with installation of accessories, dampers, coil frames, equipment, controls and other associated work of ductwork system.
I. Support ductwork in manner complying with the latest edition of the SMACNA "HVAC Duct Construction Standards, Metal and Flexible" hangers and supports section.

13. CLEANING AND PROTECTION:

A. Clean ductwork internally, unit-by-unit as it is installed, of dust and debris. Clean external surfaces of foreign substances which might cause corrosive deterioration of metal or, where ductwork is to be painted, might interfere with painting or cause paint deterioration.
B. Strip protective paper from stainless ductwork surfaces, and repair finish wherever it has been damaged.
C. Temporary Closure: At ends of ducts which are not connected to equipment or air distribution devices at time of ductwork installation, provide temporary closure of polyethylene film or other covering which will prevent entrance of dust and debris until time connections are to be completed.

14. BALANCING:

A. Refer to Division-15 section "Testing, Adjusting, and Balancing" for air distribution balancing of low pressure ductwork; not work of this section. Seal any leaks in ductwork that become apparent in balancing process.

SECTION 15870 - POWER AND GRAVITY VENTILATORS

1. RELATED DOCUMENTS:

A. Drawings and general provisions of Contract, including General and Supplementary Conditions and Division-1 Specification sections, apply to work of this section.
B. Division-15 Basic Mechanical Materials and Methods sections apply to work of this section.

2. DESCRIPTION OF WORK:

A. Extent of power and gravity ventilator work required by this section is indicated on drawings and schedules, and by requirements of this section.
B. Types of power and gravity ventilators specified in this section include the following:
   1. Power ventilators.
      a. Centrifugal rooftop ventilators.
   2. Prefabricated roof curbs.
C. Refer to Division-15 section "Testing, Adjusting, and Balancing" for balancing of power and gravity ventilators; not work of this section.
D. Refer to Division-15 temperature control systems sections for control work required in conjunction with power and gravity ventilators; not work of this section.
E. Refer to Division-16 sections for the following work; not work of this section.
   1. Power supply wiring from power source to power connection on ventilators. Include starters, disconnects, and required electrical devices, except where specified as furnished, or factory-installed, by manufacturer.
   2. Interlock wiring between ventilators; and between ventilators and field-installed control devices.
F. Provide the following electrical work as work of this section, complying with requirements of Division-16 sections:
   1. Control wiring between field-installed controls, indicating devices, and ventilators.
   2. Control wiring specified as work of Division-15 for Automatic Temperature Controls is work of that section.
   3. Interlock wiring specified as factory-installed is work of this section.

3. QUALITY ASSURANCE:

A. Codes and Standards:
   1. AMCA Compliance: Provide power ventilators which have been tested and rated in accordance with AMCA standards, and bear AMCA Certified Ratings Seal.
   2. UL Compliance: Provide power ventilators which are listed by UL and have UL label affixed.
   3. UL Compliance: Provide power ventilators which are designed, manufactured, and tested in accordance with UL 705 "Power Ventilators".
   4. NEMA Compliance: Provide motors and electrical accessories complying with NEMA standards.

4. SUBMITTALS:

A. Product Data: Submit manufacturer's technical data for power and gravity ventilators, including specifications, capacity ratings, dimensions, weights, materials, accessories furnished, and installation instructions.

5. POWER VENTILATORS:

A. General: Except as otherwise indicated, provide standard prefabricated power ventilator units of type and size indicated, modified as necessary to comply with requirements, and as required for complete installation.
B. Centrifugal Roof Ventilators: Provide centrifugal roof type, curb mounted, power ventilators of type, size, and capacity as scheduled, and as specified herein.
C. Type: Centrifugal fan, direct or belt driven as scheduled. Provide aluminum, galvanized steel, or fiberglass weatherproof housings as scheduled. Provide square base to suit roof curb. Provide permanent split-capacitor type motor for direct driven fans; capacitor-start, induction-run type motor for belt driven fans.
   1. Housing Design: Hooded dome type.
   2. Housing Design: Hooded low contour type.
   3. Housing Design: Upblast type.
D. Electrical: Provide factory-wired non-fusible type disconnect switch at motor in fan housing. Provide thermal overload protection in fan motor. Provide conduit chase within unit for electrical connection.
E. Bird Screens: Provide removable bird screens, 1/2" mesh, 16-ga aluminum or brass wire.
F. Dampers: Provide gravity-actuated louvered dampers in curb bases.
G. Refer to Division-15 automatic temperature control sections for damper motor and control sequence; not work of this section.
H. Manufacturer: Subject to compliance with requirements, provide centrifugal roof ventilators of one of the following:
   1. CaptiveAire
   2. Cook Co., Loren.
   3. Greenheck Fan Corp.

6. PREFABRICATED ROOF CURBS:

A. General: Provide manufacturer's standard shop-fabricated units, modified if necessary to comply with requirements.
B. Fabricate structural framing for units of structural quality sheet steel (ASTM A 570, Grade 40), formed to profiles indicated or, if not indicated, to manufacturer's standard profiles for coordination with roofing, insulation and deck construction. Include 45o cant strips and deck flanges with offsets to accommodate roof insulation. Weld corners and seams to form watertight units.
C. Clean and paint units with manufacturer's standard rust-inhibitive metal primer paint.
D. Fabricate units from zinc-coated steel, ASTM A 446, Grade C, designation G90 hot-dip coating, mill phosphatized. Clean and paint with rust-inhibitive metal primer paint, of type recommended by manufacturer, 2.0 mils dry film thickness.
E. Reinforce continuous runs of over 3'-0" length, by inserting welded stiffeners of heavy gage with flanges as required to provide sufficient rigidity and strength to withstand maximum lateral forces in addition to superimposed vertical loads.
F. Sloping Roof Decks: For deck slopes of 1/4" per foot and more, fabricate support units to form level top edge.
G. Gage and Height: Fabricate units of metal gage and at height above roof surface as indicated.
H. Where gage or height are not indicated, fabricate units of 14-ga metal, and nominal height of 14".
I. Provide treated wood nailer, not less than 1-5/8" thick and of width indicated, but not less than width of support wall assembly. Anchor nailer securely to top of metal frame unit.
J. Provide lumber pressure treated with water-borne preservatives for "above ground" use, complying with AWPB LP-2.
K. Fabricate exterior support profile to receive insulation of thickness indicated or, if not indicated, of 1" thickness.
L. Insulate units inside structural support wall with rigid glass fiber insulation board of approximately 3-lb. density and 1-1/2" minimum thickness, except as otherwise indicated.
M. Provide support liners where shown, formed of 22-ga galvanized sheet metal, mill phosphatized, flanged at lower edges.
N. Extend support liners through deck construction to coordinate with ductwork below as indicated.
O. Use perforated metal for support liners, with approximately 1000, 3/32" diameter holes per sq.ft.; to provide sound absorbing surfaces.
P. Metal Deck Reinforcement: Where indicated as integral part of support units, provide channel-shaped metal deck closure strips to reinforce opening through metal decking. Fabricate strips from 14-ga metal to match metal and finish of curb units, except as otherwise indicated.

7. INSTALLATION OF POWER AND GRAVITY VENTILATORS:

A. General: Except as otherwise indicated or specified, install ventilators in accordance with manufacturer's installation instructions and recognized industry practices to insure that ventilators serve their intended function.
B. Coordinate ventilator work with work of roofing, walls, and ceilings, as necessary for proper interfacing.
C. Ductwork: Refer to Division-15 section "Ductwork". Connect ducts to ventilators in accordance with manufacturer's installation instructions.
   1. Solder bottom joints and up 2" of side joints of duct under roof ventilator to retain any moisture entering ventilator.
D. Electrical Wiring: Install electrical devices furnished by manufacturer but not specified to be factory-mounted. Furnish copy of manufacturer's wiring diagram submittal to Electrical Installer.
E. Verify that electrical wiring installation is in accordance with manufacturer's submittal and installation requirements of Division-16 sections. Verify proper rotation direction of fan wheels. Do not proceed with equipment start-up until wiring installation is acceptable to equipment installer.
F. Remove shipping bolts and temporary supports within ventilators. Adjust dampers for free operation.

8. FIELD QUALITY CONTROL:

A. Testing: After installation of ventilators has been completed, test each ventilator to demonstrate proper operation of units at performance requirements specified.

SECTION 15910 - DUCTWORK ACCESSORIES

1. RELATED DOCUMENTS:

A. Drawings and general provisions of Contract, including General and Supplementary Conditions and Division 1 Specification sections, apply to work of this section.
B. Division-15 Basic Mechanical Materials and Methods sections apply to work of this section.

2. DESCRIPTION OF WORK:

A. Extent of ductwork accessories work is indicated on drawings and in schedules, and by requirements of this section.
B. Types of ductwork accessories required for project include the following:
   1. Dampers.
   2. Low pressure manual dampers.
   3. Control dampers.
   4. Counterbalanced relief dampers.
   5. Fire dampers.
   6. Turning vanes.
   7. Duct hardware.
   8. Duct access doors.
   9. Flexible connections.
C. Refer to other Division-15 sections for testing, adjusting, and balancing of ductwork accessories; not work of this section.

3. QUALITY ASSURANCE:

A. Codes and Standards:
   1. SMACNA Compliance: Comply with applicable portions of SMACNA "HVAC Duct Construction Standards, Metal and Flexible, Latest Edition".
   2. Industry Standards: Comply with ASHRAE recommendations pertaining to construction of ductwork accessories, except as otherwise indicated.
   3. UL Compliance: Construct, test, and label fire dampers in accordance with UL Standard 555 "Fire Dampers and Ceiling Dampers".
   4. NFPA Compliance: Comply with applicable provisions of NFPA 90A "Air Conditioning and Ventilating Systems", pertaining to installation of ductwork accessories.
   5. Comply with the requirements of the International Mechanical Code, site specific date.

4. SUBMITTALS:

A. Product Data: Submit manufacturer's technical product data to the Architect for each type of ductwork accessory, including dimensions, capacities, and materials of construction; and installation instructions.

5. DAMPERS:

A. Low Pressure Manual Dampers: Provide dampers of single blade type or multiblade type, constructed in accordance with SMACNA "HVAC Duct Construction Standards". Provide remote volume control regulators for volume control dampers where access is limited.
B. Control Dampers: Provide dampers with parallel blades for 2-position control, or opposed blades for modulating control. Construct blades of 16-ga. steel, provide heavy-duty molded self-lubricating nylon bearings, 1/2" diameter steel axles spaced on 9" centers. Construct frame of 2" x 1/2" x 1/8" steel channel for face areas 25 sq. ft. and under; 4" x 1-1/4" x 16-ga. channel for face areas over 25 sq. ft. Provide galvanized steel finish with aluminum touch-up.

6. FIRE DAMPERS:

A. Fabricated Fire Dampers: Provide dampers constructed in accordance with SMACNA "Fire Damper and Heat Stop Guide".
B. Fire Dampers: Provide fire dampers, of types and sizes indicated. Construct casings of 11-ga. galvanized steel with bonded red acrylic enamel finish. Provide fusible link rated at 160 to 165oF (71 to 74oC) unless otherwise indicated. Provide damper with positive lock in closed position, and with the following additional features:
   1. Damper Blade Assembly: Curtain type.
   2. Blade Material: Steel, match casing.

7. TURNING VANES:

A. Manufactured Turning Vanes: Provide turning vanes constructed of 1-1/2" wide curved blades set at 3/4" o.c., supported with bars perpendicular to blades set at 2" o.c., and set into side strips suitable for mounting in ductwork.

8. DUCT HARDWARE:

A. General: Provide duct hardware, manufactured by one manufacturer for all items on project, for the following:
   1. Test Holes: Provide in ductwork at fan inlet and outlet, and elsewhere as indicated, duct test holes, consisting of slot and cover, for instrument tests.
   2. Quadrant Locks: Provide for each damper, quadrant lock device on one end of shaft; and end bearing plate on other end for damper lengths over 12". Provide extended quadrant locks and end extended bearing plates for externally insulated ductwork.

9. DUCT ACCESS DOORS:

A. General: Provide where indicated, duct access doors of size indicated.
B. Construction: Construct of same or greater gage as ductwork served, provide insulated doors for insulated ductwork. Provide flush frames for uninsulated ductwork, extended frames for externally insulated duct. Provide one size hinged, other side with one handle-type latch for doors 12" high and smaller, 2 handle-type latches for larger doors.

10. FLEXIBLE CONNECTIONS:

A. General: Provide flexible duct connections wherever ductwork connects to vibration isolated equipment. Construct flexible connections of neoprene-coated flameproof fabric crimped into duct flanges for attachment to duct and equipment. Make airtight joint. Provide adequate joint flexibility to allow for thermal, axial, transverse, and torsional movement, and also capable of absorbing vibrations of connected equipment.

11. INSPECTION:

A. Examine areas and conditions under which ductwork accessories will be installed. Do not proceed with work until unsatisfactory conditions have been corrected in a manner acceptable to Installer.

12. INSTALLATION OF DUCTWORK ACCESSORIES:

A. Install ductwork accessories in accordance with manufacturer's installation instructions, with applicable portions of details of construction as shown in SMACNA standards, and in accordance with recognized industry practices to ensure that products serve intended function.
B. Install volume dampers where indicated on the plans. Remote control volume dampers shall be installed in all volume dampers located above hard ceilings or spaces where access to the damper is restricted. The remote volume control cable shall be free of kinks or bends, and shall be secured to the damper in conformance with the manufacturer's written instructions. The remote end of the regulator shall be placed out of sight as practical and shall be painted to match the ceiling color.
C. Install turning vanes in square or rectangular 90o elbows in supply and exhaust air systems, and elsewhere as indicated.
D. Install access doors to open against system air pressure, with latches operable from either side, except outside only where duct is too small for person to enter.
E. Coordinate with other work, including ductwork, as necessary to interface installation of ductwork accessories properly with other work.

13. ADJUSTING AND CLEANING:

A. Adjusting: Adjust ductwork accessories for proper settings, install fusible links in fire dampers and adjust for proper action.
B. Label access doors in accordance with Division-15 section "Mechanical Identification".
C. Final positioning of manual dampers is specified in Division-15 section "Testing, Adjusting, and Balancing".

SECTION 15932 - AIR OUTLETS AND INLETS

1. RELATED DOCUMENTS

A. Drawings and general provisions of Contract, including General and Supplementary Conditions and Division-1 Specification sections, apply to work of this section.

2. DESCRIPTION OF WORK

A. Extent of air outlets and inlets work is indicated by drawings and schedules, and by requirements of this section.
B. Types of air outlets and inlets required for project include the following:
   1. Air devices.
   2. Louvers.
C. Refer to other Division 15 sections for ductwork and duct accessories required in conjunction with air outlets and inlets; not work of this section.
D. Refer to other Division 15 sections for balancing of air outlets and inlets; not work of this section.

3. QUALITY ASSURANCE

A. Codes and Standards:
   1. ARI Compliance: Test and rate air outlets and inlets in accordance with ARI 650 "Standard for Air Outlets and Inlets".
   2. ASHRAE Compliance: Test and rate air outlets and inlets in accordance with ASHRAE 70 "Method of Testing for Rating the Air Flow Performance of Outlets and Inlets".
   3. NFPA Compliance: Install air outlets and inlets in accordance with NFPA 90A "Standard for the Installation of Air Conditioning and Ventilating Systems".

4. SUBMITTALS:

A. Product Data: Submit manufacturer's technical product data to the Architect for air outlets and inlets including the following:
   1. PRODUCT DELIVERY, STORAGE AND HANDLING:
      A. Deliver air outlets and inlets wrapped in factory-fabricated fiber-board type containers. Identify on outside of container type of outlet or inlet and location to be installed. Avoid crushing or bending and prevent dirt and debris from entering and settling in devices.
   2. CEILING AIR DIFFUSERS:
      A. General: Except as otherwise indicated, provide manufacturer's standard ceiling air diffusers where shown; of size, shape, capacity, and type indicated; constructed of materials and components as indicated, and as required for complete installation.
      B. Performance: Provide ceiling air diffusers that have, as minimum, temperature and velocity traverses, throw and drop, and noise criteria ratings for each size device as listed in manufacturer's current data.
      C. Ceiling Compatibility: Provide diffusers with border styles that are compatible with adjacent ceiling systems, and that are specifically manufactured to fit into ceiling module with accurate fit and adequate support. Refer to general construction drawings and specifications for types of ceiling systems which will contain each type of ceiling air diffuser.
      D. Diffuser Dampers: Fire Damper: Combination adjustable opposed blade damper and fusible link fire damper with UL approved link and assembly designed to meet requirements of NFPA 90A.
   3. LOUVERS:
      A. General: Except as otherwise indicated, provide manufacturer's standard louvers where shown; of size, shape, capacity, and type indicated; constructed of materials and components as indicated, and as required for complete installation..
      B. Performance: Provide louvers that have minimum free area, and maximum pressure drop for each type as listed in manufacturer's current data, complying with louver schedule.
      C. Substrate Compatibility: Provide louvers with frame and sill styles that are compatible with adjacent substrate, and that are specifically manufactured to fit into construction openings with accurate fit and adequate support, for weatherproof installation. Refer to general construction drawings and specifications for types of substrate which will contain each type of louver.
      D. Materials: Construct of aluminum extrusions, ASTM B 221, Alloy 6063-T52. Weld units or use stainless steel fasteners.
      E. Louver Screens: On inside face of exterior louvers, provide 1/2" square mesh anodized aluminum wire bird screens mounted in removable extruded aluminum frames.
   8. INSPECTION:
      A. Examine areas and conditions under which air outlets and inlets are to be installed. Do not proceed with work until unsatisfactory conditions have been corrected.
   9. INSTALLATION:
      A. General: Install air outlets and inlets in accordance with manufacturer's written instructions and in accordance with recognized industry practices to insure that products serve intended functions.
      B. Coordinate with other work, including ductwork and duct accessories, as necessary to interface installation of air outlets and inlets with other work.

SECTION 15990 - TESTING, ADJUSTING, AND BALANCING

1. RELATED DOCUMENTS:

A. Drawings and general provisions of Contract, including General and Supplementary Conditions and Division-1 Specification sections, apply to work of this section.
B. Division-15 Basic Mechanical Materials and Methods sections apply to work of this section.

2. DESCRIPTION OF WORK:

A. The purpose of starting, testing and adjusting this equipment is to put it into final operating condition for the Owner's use and benefit. Provide all tests of equipment and systems required to prove compliance with the drawings and specifications. Owner shall be made completely familiar with the complete working of all the mechanical system.
B. The testing, adjusting and balancing (TAB) of the air conditioning system will be performed by an independent technical firm employed directly by the Owner and shall not be a part of the contract. The air conditioning contractor shall provide and coordinate the services of qualified responsible mechanics and other personnel as required to correct, repair or replace all deficient items or conditions found during the testing, adjusting and balancing period. In order that all systems shall be properly tested, balanced and adjusted as required herein by these specifications, the Air Conditioning Contractor shall operate the systems for the length of time necessary to properly verify their completion and readiness for TAB, and shall further pay all costs of operation during the TAB period. He shall have a qualified technician available at the job site during the test and balance period to correct the contractor's work as required.
C. The HVAC systems Testing and Balancing is to be performed by others, but the contractor shall make the system ready for the TAB with a written confirmation of the following that all systems are ready:
   1. Duct systems are complete with terminals installed.
   2. Volume, smoke and fire dampers are open and functional.
   3. Clean air filters are installed.
   4. Fans are operating, free of vibration and rotating in the correct direction.
   5. Variable-frequency controllers startup is complete and safeties are verified.
   6. Automatic temperature control systems are operational.
   7. Ceilings are installed.
   8. Windows and doors are installed.
   9. Suitable access to balancing devices and equipment is provided.
D. Refer to Division-15 sections for installation and start-up of equipment to be tested, adjusted, and balanced; not work of this section.
E. Refer to Division-16 sections for electrical hook-up and wiring of equipment to be tested, adjusted, and balanced; not work of this section.

3. QUALITY ASSURANCE:

A. Codes and Standards:
   1. NEBB Compliance: Comply with NEBB's "Procedural Standards for Testing, Adjusting, and Balancing of Environmental Systems" as applicable to mechanical air and hydronic distribution systems, and associated equipment and apparatus.
   2. AABC Compliance: Comply with AABC's Manual MN-1 "AABC National Standards", as applicable to mechanical air and hydronic distribution systems, and associated equipment and apparatus.

4. SUBMITTALS:

A. Submit certified test reports, signed by Test and Balance Supervisor who performed TAB work. In addition, have report certified by Professional Engineer who is familiar with TAB work and also with project, and who is registered in jurisdiction where testing is being conducted.

5. JOB CONDITIONS:

A. Do not proceed with testing, adjusting, and balancing work until work has been completed and is operable. Ensure that there is no latent residual work still to be completed.

6. PATCHING MATERIALS:

A. Except as otherwise indicated, use same products as used by original Installer for patching holes in insulation, ductwork and housings which have been cut or drilled for test purposes, including access for test instruments, attaching jigs, and similar purposes.
B. At Tester's option, plastic plugs with retainers may be used to patch drilled holes in ductwork and housings.
C. Refer to Division-15 "Mechanical Related Work" section for patching of holes in insulation, ductwork and housings which have been cut or drilled for test purposes. In each case, patching is to be completed by original Installer.

7. TEST INSTRUMENTS:

A. Utilize test instruments and equipment for TAB work required, of type, precision, and capacity as recommended in the following TAB standards:
   1. NEBB's Procedural Standards for Testing, Adjusting, and Balancing of Environmental Systems.
   2. AABC's Manual MN-1 "AABC National Standards".
A. Examine installed work and conditions under which testing is to be done to ensure that work has been completed, cleaned, and is operable. Do not proceed with TAB work until unsatisfactory conditions have been corrected in manner acceptable to Tester.
B. Test, adjust and balance environmental systems and components, as indicated, in accordance with procedures outlined in applicable standards.
C. Test, adjust and balance system during summer season for air conditioning systems and during winter season for heating systems, including at least period of operation at outside conditions within 5oF (3oC) wet bulb temperature of maximum summer design condition, and within 10oF (6oC) dry bulb temperature of minimum winter design condition. When seasonal operation does not permit measuring final temperatures, then take final temperature readings when seasonal operation does permit.
D. Prepare report of test results, including instrumentation calibration reports, in format recommended by applicable standards.
E. Patch holes in insulation, ductwork, and housings, which have been cut or drilled for test purposes, in a manner recommended by original Installer.
F. Mark equipment settings, including damper control positions, valve indicators, fan speed control levers, and similar controls and devices, to show final settings at completion of TAB work. Provide markings with paint or other suitable permanent identification materials.

ARCHITECT:

DAVID SCOTT WINDLE, AIA

6201 CAMPUS CIRCLE DRIVE E.
IRVING, TEXAS 75038
TEL: 972.870.1288
WWW.IDSTUDIO4.COM
E-MAIL scottw@idstudio4.com

CORPORATE:
BRINKER RESTAURANT CORPORATION,
A VIRGINIA CORPORATION
3000 OLYMPUS BLVD.
DALLAS, TEXAS 75019
972.980.9917
www.brinker.com

09/23/2024
ISSUE FOR BID
THESE DOCUMENTS ARE FOR BIDDING PURPOSES ONLY. DO NOT USE FOR CONSTRUCTION.

RESTAURANT #CH1679
PROTOTYPE 18.5FS

CHILI'S TOOELE
951 N MAIN STREET
TOOELE, UT 84074

CLIENT: BRINKER RESTAURANT CORP.
A VIRGINIA CORPORATION

DATE	DESCRIPTION
6/27/2024	ISSUE FOR PERMIT
9/23/2024	ISSUE FOR BID

	DATE	DESCRIPTION

PROJECT NUMBER:
CHI24007

SHEET TITLE:
SPECIFICATIONS
15781 - 15990

SHEET NUMBER:
SP114

G. Prepare report of recommendations for correcting unsatisfactory mechanical performances when system cannot be successfully balanced; including, where necessary, modifications which exceed requirements of contract documents for mechanical work.
H. Retest, adjust, and balance systems subsequent to significant system modifications, and resubmit test results.

DIVISION 16 – ELECTRICAL
SECTION 16050 - BASIC METHODS AND REQUIREMENTS

1. SPECIAL NOTICE

A. Each Contractor shall read all relevant documents, become familiar with the job, scope of work, type of general construction, and the architectural, structural, mechanical and electrical drawings and specifications. Each Contractor shall coordinate his work with that of others.
B. The term "Contractor" used in this section of the specification shall mean the Contractor whose work is covered by this section.
C. When the term "Engineer" is used in this section of the specification, it shall mean the consulting electrical engineer.

2. SCOPE OF WORK

A. This section of the work shall comprise the furnishing of materials, equipment, tools, labor and transportation necessary for the complete installation of the electrical systems shown and hereinafter specified. Work is to be complete in every respect whether specifically mentioned in Contractor documents or not. This work and material includes, but is not limited to, the following items:
1. Panelboards, lighting fixtures, wiring devices and complete feeder and branch circuit wiring.
2. Power supply to all motors, plumbing equipment, including the installation and final connection of motor starters, compressors, pushbuttons, and other miscellaneous equipment furnished under other sections of work and/or by Owner.
3. Connections to Owner furnished smoke and fire suppression system monitoring system.
4. Backboard and empty conduit system for telephone distribution and other miscellaneous communication systems.
5. Fees, permits and provisions for metering equipment.
6. Extension and connection of electric service.
7. Interlocks
8. Dimming Switches
9. Temporary Power for Construction and Hiring Trailer

3. RESPONSIBITY OF THE CONTRACTOR

A. Each Contractor shall be responsible for all work in connection with his contract. He shall specifically and distinctly assume, all risk for damage or injury from whatever cause to property or person used or employed on or in connection with his work and of all damage or injury to any persons or property wherever located, resulting from any action of operation under the contract or in connection with the work, and undertake the promise to defend the Owner against all claims on account of any such damage or injury.
B. Each Contractor will be held responsible for the execution of a satisfactory and complete piece of work, in accordance with the true intent of the drawings and specifications and all bulletins and addenda which may be issued during the time of bidding. He shall provide, without extra charge, all incidental items required as part of his work, even though not particularly specified or indicated, and if he has good reason for objecting to the use of any materials, appliance or method of construction shown or specified, he shall make report of such objections to the General Contractor and obtain proper adjustment before the Contract is made, and shall proceed with the work, only with the understanding that a satisfactory job is required.
C. Each Contractor shall be responsible for compliance with all national, state, local and county codes, standards, ordinances and regulations.

4. RELATED DOCUMENTS

A. Drawings and general provisions of Contract, including General and Supplementary Conditions and Division 1 specification sections, apply to work of this section.
B. Furnish and install all electrical wiring, systems, equipment and accessories in accordance with the specifications and drawings. Capacities and ratings of motors, cable, panelboards, etc., and arrangement for specified items in general are shown on drawings.
C. All ampacities herein specified or indicated on the drawings are based on copper conductors, with the conduit and raceways accordingly sized. Aluminum conductors are not permitted.

5. COORDINATION WITH OTHER TRADES

A. The Electrical Contractor shall check with the General Contractor and other contractors, either under his control or those responsible solely to the Owner for any work being performed under this specification to determine whether there will be any interference with the electrical work. If the Electrical Contractor fails to check with the other contractors and the electrical work is later found to interfere with their work, then he shall make necessary changes without additional cost or delay to the Owner to eliminate such interferences.
B. Where lighting fixtures are shown to conflict with locations of structural members, mechanical or other equipment, the Electrical Contractor shall provide adequate support and wiring to clear same.

6. MINIMUM REQUIREMENTS

A. References to the National Electrical Code (NEC), Underwriters Laboratories, Inc. (UL), and National Fire Protection Association (NFPA) are a minimum installation requirement standard. Design drawings and other specification sections shall govern in those instances where requirements are greater than those specified in NEC.
B. The rules and regulations of the Federal, State, local, civil authorities and utility companies in force at the time of execution of the contract shall become a part of this specification. Work shall be in accordance with the requirements of applicable building codes noted on the title sheet of the drawing set.
C. No work shall be done unless the Superintendent of the Contractor is on the job site. Work shall be properly protected, all rubbish removed promptly, and exposed work shall be carefully cleaned prior to final acceptance.
D. The term "provide" shall include labor, materials, and equipment necessary to furnish and install, complete and operable, the item or system indicated.
E. In decisions arising from discrepancies, interpretation of Drawings and Specifications, substitutes, and other pertinent matters, the decision of the Owner's representative's approval shall be final.

7. SPECIFICATIONS AND DRAWINGS

A. The interrelation of the specifications, drawings and schedules shall be as hereinbefore described in the Architectural Sections of the specifications.
B. Should the drawings disagree in themselves, or with the specifications, contact the General Contractor.
C. The "Scope of Work" as stated, is intended to designate the general description of the work which shall be performed by each of the major contractors. It is not intended to include specifically, nor is it intended to limit the scope of the work where plans, schedules, notes or standards practice requires the inclusion of other specific items.
D. When the drawings do not give exact details as to the elevations of pipe, conduit and ducts, the contractors shall physically arrange the systems to fit in the space available at the elevations intended with the proper grades for the functioning of the systems involved. Piping, exposed conduit and the duct systems are generally intended to be installed true and square to the building construction, and located as high as possible against the structure in a neat and workmanlike manner. Work shall be concealed in all finished areas except as shown.

8. RECORDS FOR OWNER

A. Each Contractor shall accumulate during the job progress the following data in duplicate, prepared in a neat brochure or packet folder, and turn over to the Construction Manager:
1. All warranties, guarantees and manufacturer's directions on equipment and material covered by the Contract.
2. Copies of approved shop drawings.
3. Repair parts list of all major items and equipment including name, address and telephone number of local supplier or agent.

9. CODES AND STANDARDS

A. All materials and workmanship shall comply with all applicable local, county, state and nation codes, specifications, ordinances, utility company regulations and specified industry standards.
B. In case of difference between building codes, specifications, regulations and the Contract Documents, the most stringent shall govern. The Contractor shall promptly notify the General Contractor in writing of any such difference. Should the Contractor perform any work that does not comply with the requirements of the applicable building codes, state laws, local ordinance, shall bear all costs arising in correcting these deficiencies.
C. In addition to the local, county, and state ordinances, and the utility company regulations, the following industry standards and codes shall apply as applicable, except where the requirements of this specification are more stringent than the following standards, they shall take precedence:

ASTM	American Society of Testing Materials
IEEE	Institute of Electrical and Electronics Engineers
IES	Illuminating Engineering Society
NEC	National Electrical Code
NEMA	National Electrical Manufacturers Association
NFPA	National Fire Protection Association
UL	Underwriters' Laboratories
ADA	Americans with Disabilities Act
TAS	Texas Accessibility Standard

D. All material and equipment shall be listed, labeled or certified by Underwriters Laboratories, Inc., where such standards have been established. Equipment and material which are not covered by UL Standards will be accepted provided equipment and material is listed, labeled, certified or otherwise determined to meet safety requirements of a nationally recognized testing laboratory. Equipment of a class which no nationally recognized testing laboratory accepts, certifies, lists, labels, or determines to be safe, will be considered if inspected or tested in accordance with national industrial standards, such as NEMA, or ANSI. Evidence of compliance shall include certified test reports and definitive shop drawings.
C. Definitions:
1. Listed: Equipment is "listed" if of a kind mentioned in a list which:
a. Is published by a nationally recognized laboratory which makes periodic inspection of production of such equipment.
b. States that such equipment meets nationally recognized standards or has been tested and found safe for use in a specified manner.
2. Labeled: Equipment is labeled if:
a. It embodies a valid label, symbol, or other identifying mark of a nationally recognized testing laboratory such as Underwriters Laboratories, Inc.
b. The laboratory makes periodic inspections of the production of such equipment.
c. The labeling indicates compliance with nationally recognized standards or tests to determine safe use in a specified manner.
3. Certified: Equipment is "certified" if:
a. Equipment has been tested and found by a nationally recognized testing laboratory to meet nationally recognized standards or to be safe for use in a specified manner.
b. Production is periodically inspected by a nationally recognized testing laboratory.
c. It bears a label, tag, or other record of certification.
4. Nationally recognized Testing Laboratory: A testing laboratory which is approved, in accordance with OSHA regulations, by the Secretary of Labor.

10. QUALIFICATIONS (PRODUCTS AND SERVICES)

A. Manufacturers Qualifications: The manufacturer shall regularly and presently produce, as one of the manufacturer's principal products, the equipment and material specified for this project, and shall have manufactured the item for at least five years, unless otherwise noted elsewhere in the specifications or on the drawings.
B. Product Qualification:
1. Manufacturer's product shall have been in satisfactory operation on three installations of similar size and type, as this project, for approximately three years.
2. The Owner reserves the right to require the contractor to submit a list of installations where the products have been in operation before approval of said products.
C. Service Qualifications: There shall be a permanent service organization maintained or trained by the manufacturer which will render satisfactory service to this installation within four hours of receipt of notification that service is needed. Submit name and address of service organizations.

11. MANUFACTURED PRODUCTS

A. Materials and equipment furnished shall be of current production by manufacturers regularly engaged in the manufacture of such items, for which replacement parts should be available. Items not meeting this requirement, but which otherwise meet technical specifications, and merits of which can be established through reliable test reports or physical examination of representative samples, will be considered.
B. When more than one unit of the same class of equipment is required, such units shall be the product of a single manufacturer.
C. Equipment Assemblies and Components:
1. All components of an assembled unit need not be products of the same manufacturer, however, the assembled unit shall be the responsibility of a single manufacturer and warranted as such.
2. Manufacturers of equipment assemblies, which include components made by others, shall assume complete responsibility for the final assembled unit.
3. Components shall be compatible with each other and with the total assembly for the intended service.
4. Constituent parts which are similar shall be the product of a single manufacturer.
D. All factory wiring shall be identified on the equipment being furnished and on all wiring diagrams.

12. EQUIPMENT REQUIREMENTS

A. Equipment voltage ratings shall be in accordance with the requirements indicated on the drawings or as specified.
B. Prior to bid, written approval shall be obtained by the Contractor for any equipment that differs from those specified on the drawings and specifications. The Contractor shall be prepared to submit samples of the equipment when requested at no cost to the Owner.
1. The Contractor shall furnish drawings showing all installation details, shop drawings, technical data and other pertinent information as required to determine that the equipment is equivalent in quality and function to the equipment specified.
2. Approval by the Owner's construction manager of the equal equipment does not relieve the Contractor of the responsibility of furnishing and installing the equipment at no additional cost to the Owner.
3. Any other items required for the satisfactory installation of the equal equipment shall be furnished and installed at no additional cost to the Owner. This includes but shall not be limited to additions or changes to branch circuits, circuit protective devices, conduits, wire, feeders, controls, panels and correlation with other work, subject to the jurisdiction and approval of the Architect/Engineer.
C. Catalogue numbers, where given, are intended to give a basis for design, quality and function. Any other incidental equipment needed for a complete and functional installation shall be provided at no additional cost.
D. EQUIPMENT PROTECTION: Equipment and material shall be protected during shipment and storage against physical damage, dirt, moisture, cold and rain.
E. During installation, equipment, controls, controllers, circuit protective devices, etc., shall be protected against entry of foreign matter; and be vacuum cleaned both inside and outside before testing, operating and painting.
F. Damaged equipment shall be, as determined by the Owner's construction manager, placed in first class operating condition or be returned to the source of supply for repair or replacement or replaced at owner discretion.
G. Painted surfaces shall be protected with factory installed removable heavy kraft paper, sheet vinyl or equal.
H. Damaged paint on equipment and materials shall be refinished with the same quality of paint and workmanship as used by the manufacturer so repaired areas are not obvious or replaced at owner discretion.

13. WORK PERFORMANCE

A. Arrange, phase and perform work to assure electrical service for other buildings at all times.
B. New work shall be installed and connected to existing work neatly and carefully. Disturbed or damaged work shall be replaced or repaired to its prior conditions.
C. Coordinate location of equipment and conduit with other trades to minimize interferences.
D. Obtain and pay for all required installation inspections and deliver certificates approving installations to the Owner unless directed otherwise.

14. EQUIPMENT INSTALLATION AND REQUIREMENTS

A. Equipment location shall be as close as practical to locations shown on the drawings. Where architectural features govern location of work, refer to architectural drawings.
B. Working spaces shall not be less than specified in the National Electrical Code for all voltages specified.
C. Inaccessible Equipment:
1. Where the Owner/Architect/Engineer determines that the Contractor has installed equipment not conveniently accessible for operation and maintenance, equipment shall be removed and reinstalled as directed at no additional cost to the Owner.
2. "Conveniently accessibility" is defined as being capable of being reached without the use of ladders, or without climbing or crawling under or over obstacles such as motors, pumps, belt guards, transformers, piping, and duct work.
D. Equipment and Material:
1. New equipment and material shall be installed, unless otherwise specified.
2. Equipment and material shall be designed to assure satisfactory operation and operating life for environmental conditions where being installed. NEC and other code requirements shall apply to the installation in areas requiring special protection such as explosion-proof, watertight and weatherproof construction.
E. Utilities
1. The location, size and characteristics of the electric and telephone services and points of service entrance are shown in accordance with data given by various departments of cities and/or utility companies involved. The points of connection to the utility lines are, therefore, approximate only and shall be verified by the Contractor bidding each portion of the work. Each bidder shall include adequate funds in his bid lines regardless of exact locations and shall old the Owner harmless as to additional costs or extras regarding the utility connections.
F. Electric Service
1. This Contractor shall contact the local power company and make all arrangements, pay all fees, and acquire all permits as required for the installation of the electrical service and systems as hereinafter specified and shown.
2. The electric service shall be from the local utility company, with voltage phase, and wire, all as shown on plans. The Electrical Contractor shall properly coordinate all his work as required, shall install all conduit and conductors as necessary to complete the electrical service. He shall make provisions for the metering equipment in accordance with the utility company standards.
G. Telephone Services
1. The telephone service shall connection to the building as shown. This Contractor shall coordinate his work with the telephone company and shall furnish entrance conduits, backboards, pull strings, and distribution systems as hereinafter specified and indicated, or as required by the Telephone Company.
H. Cable TV Service
1. The Cable TV service shall connect to the building as shown. This Contractor shall coordinate his work with the Cable TV company and shall furnish entrance conduits, backboards, pull strings, and distribution systems as hereinafter specified and indiated, or as required by the Cable TV Company.
I. Fees and Permits
1. Each Contractor shall obtain all permits, inspection, and approvals applicable to his trade as required by regulatory authorities. All fees and costs of any nature whatsoever incidental ot these permits, inspections and approvals shall be assumed.
J. Continuity of Service:
1. No service shall be interrupted or changed without permission from the Architect and the Owner. Written permission shall be obtained before any work is started.
2. When interruption of services is required, all persons concerned shall be notified and a prearranged time agreed upon.

15. EQUIPMENT IDENTIFICATION

A. In addition to the requirements of the National Electrical Code, install an identification nameplate which will clearly indicate information required for use and maintenance of items such as switchboard, panelboards, cabinets, safety switches, separately enclosed circuit breakers, motor starters, communications systems cabinets, control devices and other significant equipment.
B. Nameplates shall be laminated white phenolic resin with a black core with engraved lettering, a minimum of 3/16-inch high. Nameplates that are furnished by manufacturer as a standard catalog item, or where other method of identification is herein specified, are exceptions. Hand written marker is not acceptable.

16. SHOP AND ERECTION DRAWINGS AND SAMPLES

A. The Architect/Engineer's approval shall be obtained for all equipment and material before delivery to the job site. Delivery, storage or installation of equipment or material which has not had prior approval will not be permitted at the job site. Submittals shall be made for all equipment and systems as indicated in the respective specification section.
B. All submittals shall include adequate descriptive literature, catalog cuts, shop drawings and other data necessary for the Architect/Engineer to ascertain that the proposed equipment and materials comply with specification and drawing requirements. Catalog cuts submitted for approval shall be legible and clearly identify equipment being submitted.
C. Shop and erection drawing submittals shall conform to the requirements of the General Conditions and Division-1 specifications except as modified herein.
D. Submit required and requested shop and erection drawings, for review by Architect/Engineer before ordering or installing any equipment or material. Equipment or material ordered or installed before Architect/Engineer review may not be accepted and may have to be removed from the project if deemed unacceptable.
E. Shop drawings shall consist of manufacturer's scale drawings, cuts or catalogs, including descriptive literature which shall clearly indicate the construction, material, physical dimensions, wiring diagrams and complete operating data clearly marked for each item. Data of general nature will not be accepted.
F. Shop drawings shall be submitted with a minimum of (2) sets. One set will be retained by the engineer and one will be returned to the contractor. All drawings are to be submitted no later than 30 days after the contract has been awarded.
1. Coordination drawings shall show major elements, components, and systems of mechanical equipment and materials in relationship with other building components. Prepare drawings to an accurate scale of 1/4"=1'-0" or larger. Indicate the locations of all equipment and materials, including clearances for installing and maintaining insulation, servicing and maintaining equipment, valve stem movement, and similar requirements. Indicate movement and positioning of large equipment into the building during construction.
G. Submittals for individual systems and equipment assemblies which consist of more than one item or component shall be made for the system or assembly as a whole. Partial submittals will not be considered for approval. Submittals shall be submitted for all applicable products and materials specified in each individual section of these specifications.
H. Make submittals for the equipment and materials in accordance with the following:
1. Mark the submittals, "SUBMITTED UNDER SECTION _____".
2. Submittals shall be marked to show specification reference including the section and paragraph numbers.
3. The submittals shall include the following:
a. Information that confirms compliance with contract requirements. Include the manufacturer's name, model or catalog numbers, catalog information, technical data sheets, shop drawings, pictures, nameplate data and test reports as required. Provide any additional information specifically requested in the individual specification section or on the drawings.
b. Elementary and interconnection wiring diagrams for fire alarm, sound system, TV system and other communication systems and equipment assemblies. All terminal points and wiring shall be identified on wiring diagrams.
c. Parts list which shall include those replacement parts recommended by the equipment manufacturer, quantity of parts, current price and availability of each part.
I. Shop drawings on paper 11"X17" or smaller in size shall be submitted in tabbed and indexed three ring binder. The binder shall not exceed 11-5/8" height. Partial submittals are unacceptable. The index shall indicate the related specification section number.
J. A Fee will be charged for Engineering review of drawings received after the time allotted as described in "D" above or for plans that have been rejected two or more times due to non-compliance or incompleteness. The fee will be determined by the Architect/Engineer and will accompany the re-submittal in the form of a cashiers check or money order made payable to the Engineer.
K. The General Contractor will certify that all electrical shop drawings are in conformance with the plans and specifications. Deviations from the plans and specifications shall be noted, and the specific area of the deviation clouded and in contrasting color (green) with a complete explanation for the reasons for the deviation. Any redesign of the system shall be Certified by a Professional Engineer, and will be accompanied by the fees as described in "F" above.
L. Carefully examine all shop drawings and mark-up as necessary before submitting to the Architect/Engineer for review. The consultant will only consider shop drawings bearing the contractor's stamp of approval.
M. The engineer's review shall not relieve the contractor from the responsibility for deviations from drawings and specifications. The engineer's review shall be construed to apply only to general arrangement and shall not relieve the contractor from the responsibility for the correctness of details and dimensions and provision of the correct equipment.
N. The contractor shall retain copies of all reviewed shop drawings on the job site for reference.
O. In addition to the requirement of SUBMITTALS, the Owner reserves the right to request the manufacturer to arrange for the Owner's representative(s) to see typical active systems in operation, when there has been no prior experience with the manufacturer or the type of equipment being submitted.
P. The Contractor shall be fully responsible for proper maintenance of equipment and systems until the instructions have been given to the Owner's personnel and the letter of release acknowledged.

17. CUTTING, PATCHING, EXCAVATION, BACKFILL, AND LAYOUT

A. Provide openings and excavation required for the installation of the electrical work. Patch work and backfill as required. Finished work shall match the existing adjoining work.
B. Verify all conditions affecting the work to be performed under this contract.
C. Carefully verify measurements at the site, determine the exact location of chases and openings required. Provide sleeves, inserts, and hangers as required. No columns, beams, joists, building foundations nor any other structural building component shall be cut, drilled or disturbed in any way. Conflicts shall immediately be brought to the attention of the Architect/Engineer.
D. All excavation on sites containing existing buildings and existing services, shall be done with hand shovel to avoid damage to existing services. Where hand shovel is not practical extreme caution shall be taken when performing excavation. The contractor will be resposible for locating any existing utilities. Any damage incurred by the Contractor shall be repaired by the Contractor in a manner approved by the Owner's construction manager at no cost and with no extension of time limitation.

18. EXPERIENCE

A. The Contractor performing this work shall be a licensed, reputable firm, regularly performing the type of work incorporated in this project and who also maintains, as part of the firm, a service department with qualified personnel who regularly perform this type of work. The Contractor shall, upon request, show evidence of at least three jobs of similar character and size installed within the preceding two years.

19. ELECTRICAL WORK FOR MECHANICAL SYSTEMS

A. Factory installed starters, controllers, and control equipment mounted in manufactured mechanical equipment necessary for mechanical equipment operation shall be furnished under Division 15 Mechanical.
B. Power wiring for motors and installation of starters shall be under Division 16 Electrical.
C. Temperature, humidity, pressure and similar controls essential to the operation of mechanical systems, and wiring and conduit thereof, including interlock wiring, shall be under Division 15 of Specifications, installed in accordance with requirements of Division 16.
D. Motors shall be furnished under Division 15 Mechanical of capacity required to operate equipment specified, but shall not be less than that specified.
E. All low voltage (120V and under) temperature control wiring for Division 15 equipment shall be provided under by Division 15, installed in accordance with requirements of Division 16.
F. Division 15 shall provide conduit when required for control wiring, installed in accordance with Division 16 requirements.

20. ELECTRICAL ENERGY, WATER AND SANITARY FACILTIES

A. Electrical energy, water and sanitary facitlies required for the construction of this project shall be provided as hereinbefore specified under the Architectural Sections of the work except all electrical energy required for welding shall be provided by the Contractor doing the welding in the form of portable gasoline power generators as allowed by local regulations.

21. MOTORS

A. All motors shall be furnished and installed under Division 15 Mechanical and shall be wired under Division 16 Electrical.

22. REMOVAL OF RUBBISH

A. Contractor shall keep premises free from accumulations of waste material or rubbish caused by his employees or work. At completion of work, he shall remove all his tools, scaffolding, surplus materials, and rubbish from building and site. He shall leave premises and his work in a clean orderly condition acceptable to the Owner.

23. QUIET OPERATION AND VIBRATION

A. All equipment provided under this section shall operate under all conditions of load free of objectionable sound and vibration. Sound and vibration conditions considered objectionable shall be corrected in an approved manner.
B. Vibration and sound control shall be by means of approved vibration eliminators or sound attenuators in a manner as specified and as recommended by the manufacturer.

24. CLEANING AND ADJUSTMENTS

A. Upon completion of the work, Contractor shall clean and re-lamp all light fixtures, clean and identify all equipment, adjust and test all equipment and apparatus which he has installed and make certain such apparatus and mechanisms are in proper working order and ready to test.
B. During construction protect all conduit and equipment from damage and dirt. Cap the open ends of all conduit and equipment.

25. STORAGE OF MATERIALS

A. All materials stored on site shall be properly protected from injury or deterioration. Materials shall not be stored in contact with ground or floor.
B. Do not remove manufacturer's packing materials until ready to install. Materials showing signs of corrosion, improper handling or storage shall be replaced at no cost to the Owner.
C. Provide continuous protection for all equipment already installed.

26. WATERPROOFING

A. Where any work pierces waterproofing including waterproof concrete, the method of installation shall be as approved by the Owner before the work is done.
B. Provide all necessary sleeves, caulking and flashing required to make openings absolutely watertight. Waterproof flashing materials shall be compatible with base materials.

27. TESTS

A. Contractor shall make all tests required to establish the adequacy, quality, safety, completed status and satisfactory operation of all systems to the satisfaction of the Owner's construction manager. Provide all instruments, labor and services necessary to conduct tests.

28. INSTRUCTIONS

A. Fully instruct Owner's personnel in the care and operation of electrical systems, including all communications, sound and fire alarm systems and furnish a letter to the Owner advising the particular person(s) who have received such instruction.

29. GUARANTEE

A. Equipment shall be started, tested, adjusted, and placed in satisfactory operating condition. Furnish a letter addressed to the Owner advising that the completed systems have been installed in accordance with the Plans and Specifications and that they are in proper operating condition. The Owner shall receive a written guarantee covering all defects in workmanship and material for a period of one year from date of final acceptance. Any defects appearing within this year period shall be repaired without additional cost to the Owner.

30. ACCEPTANCE

A. Before requesting final inspection:
1. Complete all work required. If any items are held in abeyance as incomplete for final inspection, list such items together with explanation for delay.
2. Submit statement that equipment is properly installed, adjusted, tested and operation is satisfactory.
3. Certify in writing to the Architect/Engineer that the Owner's representative has been instructed as to the care and operation of the system and that catalog service and maintenance information has been turned over to the Architect/Engineer.
4. Submit copy of written guarantee.
5. Submit copy of other data as may be outlined in these specifications.
B. Copies of the above data shall be submitted to the Architect/Engineer prior to requesting final inspection.

31. SINGULAR NUMBER

A. Where any device or part of equipment is referred to in these specifications in the singular number (such as "the switch"), such reference shall be deemed to apply to as many such devices as are required to complete the installation as shown on the drawings.

SECTION 16110 - RACEWAYS

1. RELATED DOCUMENTS

A. Drawings and general provisions of Contract, including General and Supplementary Conditions and Division 1 specification sections, apply to work of this section.
B. This section is a Division-16 Basic Electrical Materials and Methods section, and is part of each Division-16 section making reference to electrical raceways specified herein.

2. DESCRIPTION OF WORK

A. Extent of raceway work is indicated by drawings and schedules. Types of raceways specified in this section include the following:
1. Electrical metallic tubing (EMT).
2. Liquid tight flexible metal conduit.
3. Rigid metal conduit.
4. Flexible metal conduit.
5. Rigid non-metallic conduit.

3. QUALITY ASSURANCE

A. Manufacturers: Firms regularly engaged in manufacture of raceway systems of types and sizes required, whose products have been in satisfactory use in similar service for not less than 5 years.
B. Installer's Qualifications: Firm with at least 3 years of successful installation experience on projects with electrical raceway work similar to that required for this project.
C. Codes and Standards:
1. NEMA Compliance: Comply with applicable requirements of NEMA Standards Publications pertaining to raceways.
2. UL Compliance and Labeling: Comply with applicable requirements of UL safety standards pertaining to electrical raceway systems. Provide raceway products and components which have been UL-listed and labeled.
3. NEC Compliance: Comply with applicable requirements of NEC pertaining to construction and installation of raceway systems.

4. SUBMITTALS

A. Product Data: Submit manufacturer's technical product data, including specifications and installation instructions, for each type of raceway system required. Include data substantiating that materials comply with requirements.

5. METAL CONDUIT AND TUBING

A. General: Provide metal conduit, tubing, and fittings of types, grades, sizes, and weights (wall thicknesses) for each service indicated.
B. Rigid Steel Conduit: Provide rigid steel, zinc-coated, threaded type conforming to FS WW-C-581, ANSI C80.1 and UL 6.
C. Rigid Metal Conduit Fittings: Cast malleable iron, galvanized or cadmium plated, conforming to FS W-F-408, ANSI C80.4.
1. Use compression type fittings for connections.
2. Use compression type fittings for other miscellaneous connections.
D. Electrical Metallic Tubing (EMT): FS WW-C-563, ANSI C80.3 and UL 797.
E. EMT Fittings: FS W-F-408, ANSI C80.4. Die cast or malleable iron.
1. Use compression fittings for raintight connections.
2. Use compression type for concrete type connections.
3. Use compression type fittings for miscellaneous connections.
F. Liquid-Tight Flexible Metal Conduit: Provide liquid-tight flexible metal conduit; construct of single strip, flexible, continuous, interlocked, and double-wrapped steel; galvanized inside and outside; coat with liquid-tight jacket of flexible polyvinyl chloride (PVC). Shall be Sealtite or equal.
G. Liquid-Tight Flexible Metal Conduit Fittings: FS W-F-406, Type 1, Class 3, Style G. Provide cadmium plated, malleable iron fittings with compression type steel ferrule and neoprene gasket sealing rings, with insulated, or non-insulated throat.
H. Flexible Metal Conduit: FS WW-C-566 and UL 1. Formed from continuous length of spiral wound, interlocked zinc-coated strip steel.
I. Flexible Metal Conduit Fittings: Provide conduit fittings for use with flexible steel conduit of threadless hinged clamp type.
1. Straight Terminal Connectors: One piece body, female end with clamp and deep slotted machine screw for securing conduit, and male threaded end provided with locknut.
2. 45o or 90o Terminal Angle Connectors: Two-piece body construction with removable upper section, female end with clamp and deep slotted machine screw for securing conduit, and male threaded end provided with locknut.

6. NONMETALLIC CONDUIT

A. General: Provide nonmetallic conduit, ducts, and fittings of types, sizes, and weights for each service indicated. Where types and grades are not indicated, provide proper selection determined by Installer to fulfill wiring requirements which comply with provisions of NEC for raceways.
B. Electrical Plastic Conduit:
1. Heavy Wall Conduit: Schedule 40, 90 C, UL-rated, construct of polyvinyl chloride and conforming to NEMA TC-2, for direct burial, or normal above ground use, UL-listed and in conformity with NEC Article 347, ANSI C33.91.
C. PVC Conduit and Tubing Fittings: NEMA TC 3, mate and match to conduit or tubing type and material.

7. MANUFACTURERS

A. Subject to compliance with requirements, provide conduit bodies of one of the following:
Appleton Electric; Div of Emerson Electric Co.
Arrow-Hart Div; Crouse-Hinds Co.
Bell Electric Div; Square D Co.
Gould, Inc.
Killark Electric Mfg. Co.
O-Z/Gedney Div; General Signal Co.
Spring City Electrical Mfg. Co., or equivalent.

8. INSPECTION

A. Examine areas and conditions under which raceways are to be installed, and substrate which will support raceways. Notify Contractor in writing of conditions detrimental to proper completion of the work. Do not proceed with work until unsatisfactory conditions have been corrected in manner acceptable to Installer.

9. INSTALLATION OF RACEWAYS

A. General: Install raceways as indicated; in accordance with manufacturer's written installation instructions, and in compliance with NEC, and NECA's "Standards of Installation". Install units plumb and level, and maintain manufacturer's recommended clearances.
B. Coordinate with other work including wires/cables, boxes, and panel work, as necessary to interface installation of electrical raceways and components with other work.

10. INSTALLATION OF CONDUITS

A. General: Install concealed conduits in new construction work, either in walls, slabs, or above hung ceilings. Run conduits concealed in existing work where practical or specifically indicated on the drawings.
1. Mechanically fasten together metal conduits, enclosures, and raceways for conductors to form continuous electrical conductor. Connect to electrical boxes, fittings, and cabinets to provide electrical continuity and firm mechanical assembly.
2. Avoid use of dissimilar metals throughout system to eliminate possibility of electrolysis. Where dissimilar metals are in contact, coat surfaces with corrosion inhibiting compound before assembling.
3. Install miscellaneous fittings such as reducers, chase nipples, 3-piece unions, split couplings, and plugs that have been specifically designed and manufactured for their particular application. Install expansion fittings in raceways every 200' linear run or wherever structural expansion joints are crossed.
B. Conduit Installation: Follow minimum requirements in all areas as follows:
1. Use rigid steel galvanized conduit in service splines, where exposed to weather or subject to saturation with liquids, or subject to possible physical damage from vehicles or heavy machinery.
2. Use steel EMT above hung ceilings in offices, corridors, toilets, and lab areas, and in spaces with exposed ceilings.
3. Use rigid steel conduit or PVC heavy wall (Schedule 40) when raceways run below grade, under floors on grade or in concrete. All bends and elbows greater than 45 degrees shall be galvanized rigid steel conduit or schedule 40 pvc. All risers to cabinets and boxes when conduit is to be exposed shall be rigid steel conduit.
4. Conduit in walls to recessed panels and boxes shall be in accordance with NEC. PVC up to first point of termination with 4'-0" maximum in wall and EMT above 4'-0".
5. Use flexible conduit in movable partitions and from outlet boxes to lighting fixtures, and final 24" of connection to motors, control items or any equipment subject to movement or vibration, and in cells of precast concrete panels.
6. Use liquid-tight flexible conduit where subjected to one or more of the following conditions:
a. Exterior location.
b. Moist or humid atmosphere where condensate can be expected to accumulate.
c. Corrosive atmosphere.
d. Subjected to water spray or dripping oil, water, or grease, including kitchen areas.
7. Use hot-dipped galvanized conduit where conduit is routed outdoors or in anyway exposed to weather.

ARCHITECT:
DAVID SCOTT WINDLE, AIA
6201 CAMPUS CIRCLE DRIVE E.
IRVING, TEXAS 75038
TEL: 972.870.1288
WWW.IDSTUDIO4.COM
E-MAIL scottw@idstudio4.com

CORPORATE:
BRINKER RESTAURANT CORPORATION,
A VIRGINIA CORPORATION
3000 OLYMPUS BLVD.
DALLAS, TEXAS 75019
972.980.9917
www.brinker.com

09/23/2024
ISSUE FOR BID
THESE DOCUMENTS ARE FOR BIDDING PURPOSES ONLY. DO NOT USE FOR CONSTRUCTION.

RESTAURANT #CH1679
PROTOTYPE 18.5FS

CHILI'S TOOELE
951 N MAIN STREET
TOOELE, UT 84074

CLIENT: BRINKER RESTAURANT CORP.
A VIRGINIA CORPORATION

DATE	DESCRIPTION
6/27/2024	ISSUE FOR PERMIT
9/23/2024	ISSUE FOR BID

	DATE	DESCRIPTION

PROJECT NUMBER:
CHI24007

SHEET TITLE:
SPECIFICATIONS
15990 - 16110

SHEET NUMBER:
SP115

8. Electrical contractor will be responsible for the following for all underground conduits:
   a. Trenching and Excavation
   b. Backfill
   c. Compaction
9. MC cable may be used only where approved for use by the owner in advance of install, approved by the local authority having jurisdiction and approved by the Engineer. Where used, MC cable shall be concealed and supported in accordance with NEC.

C. Cut conduits straight, properly ream, and cut threads for heavy wall conduit deep and clean.
D. Field bend conduit with benders designed for purpose so as not to distort nor vary internal diameter.
E. Minimum conduit size shall be 1/2" unless noted otherwise. Homeruns shall be a minimum 3/4".
F. Fasten conduit terminations in sheet metal enclosures by two (2) locknuts, and terminate with bushings. Install locknuts inside and out side enclosure.
G. Conduits are not to cross pipe shafts, or ventilating duct openings.
H. Keep conduits a minimum distance of 6" from parallel runs of flues, hot water pipes or other sources of heat. Wherever possible, install horizontal raceway runs above water and steam piping.
I. Use of running threads at conduit joints and terminations is prohibited. Where required, use 3-piece union or split coupling.
J. Complete installation of electrical raceways before starting installation of cables/wires within raceways.
K. Install conduits so as not to damage or run through structural members. Avoid horizontal or cross runs in building partitions or side walls.
L. Exposed Conduits:
   1. In no case shall conduit be exposed to view in areas accessible to the public nor in any kitchen or other food services areas. The contractor shall be responsible for obtaining written approval for all and any exposed conduit routing prior to installation. Any non-approved exposed conduit will be subject to removal and re-routing by the contractor at no additional expense to the owner. The contractor shall be responsible for coordinating all conduit installation with structural members, finishes, sprinkler piping, ductwork, lighting, etc.
   2. Install any approved exposed conduits and extensions from concealed conduit systems neatly, parallel with, or at right angles to walls of building.
   3. Install exposed conduit work as not to interfere with ceiling inserts, lights or ventilation ducts or outlets.
   4. Support all conduits by use of hangers, clamps, or clips. Support conduits on each side of bends and on spacing not to exceed following: up to 1": 6'-0"; 1-1/4" and over: 8'-0". All conduits shall be adequately supported to prevent any noticable deflection, vibration or rattle.
M. Conduit Fittings:
   1. Construct locknuts for securing conduit to metal enclosure with sharp edge for digging into metal, and ridged outside circumference for proper fastening.
   2. Bushings for terminating conduits smaller than 1- 1/4" are to have flared bottom and ribbed sides, with smooth upper edges to prevent injury to cable insulation.
   3. Install insulated type bushings for terminating conduits 1-1/4" and larger. Bushings are to have flared bottom and ribbed sides. Upper edge to have phenolic insulating ring molded into bushing.
   4. All bushings of standard or insulated type to have screw type grounding terminal.
   5. Miscellaneous fittings such as reducers, chase nipples, 3-piece unions, split couplings, and plugs to be specifically designed for their particular application.
N. Concealed Conduits:
   1. Metallic raceways installed underground or in floors below grade, or outside are to have conduit threads painted with corrosion inhibiting compound before couplings are assembled. Draw up coupling and conduit sufficiently tight to ensure watertightness.
   2. Conduit in concrete slabs: Separate conduits by not less than diameter of largest conduit to ensure proper concrete bond. Conduits must have a minimum of three-quarter inch (3/4") concrete cover.
   3. Embedded conduit diameter is not to exceed one-third (1/3) of slab thickness. Conduit shall not be run in slabs less than 3 inches thick.
O. Underground Duct Banks and Underground Conduits: All underground conduits shall be installed per the National Electrical Code, in accordance with standard industry practices and in accordance with other sections of these specifications. Conduits in duct banks shall be neatly and securely installed in straight lines with manufactured elbows used for all turns and bends. Provide all required trenching, excavation, backfill, compaction, supports, manholes, etc. for a complete installation. Trenching, excavation, backfill and compaction shall be performed in accordance with applicable Division 2 and Division 3 sections of these specifications.
P. Low Voltage Control:
   1. Mechanical contractor (Division 15) to provide and install all necessary wire and raceway (EMT conduit) for low voltage control such as thermostats, timers etc., unless specifically shown otherwise on the drawings. Raceways shall be installed in accordance with Division 16 sections. Final wire connections shall be by mechanical contractor.

11. INSTALLATION OF RACEWAYS AND WIREWAYS
A. General: Mechanically assemble metal enclosures, and raceways for conductors to form continuous electrical conductor, and connect to electrical boxes, fittings and cabinets as to provide effective electrical continuity and rigid mechanical assembly.
   1. Avoid use of dissimilar metals throughout system to eliminate possibility of electrolysis. Where dissimilar metals are in contact, coat all surfaces with corrosion inhibiting compound before assembling.
   2. Install expansion fittings in all raceways wherever structural expansion joints are crossed.
   3. Make changes in direction of raceway run with proper fittings, supplied by raceway manufacturer. No field bends of raceway sections will be permitted.
   4. Properly support and anchor raceways for their entire length by structural materials. Raceways are not to span any space unsupported. Supporting conduits from ceiling grid, other conduits, ductwork or other non-structural members will not be permitted.
   5. Use boxes as supplied by raceway manufacturer wherever junction, pull or devices boxes are required. Standard electrical "handy" boxes, etc. shall not be permitted for use with surface raceway installations.

12. COMMUNICATIONS SYSTEMS RACEWAY
A. Communications systems raceways shall be provided for each telephone, data, security, sound, ITV, and fire alarm outlet or device indicated on the drawings. Conduit with pull string shall be as indicated on the drawings and as required for each system.

SECTION 16120 - WIRES AND CABLES

1. RELATED DOCUMENTS
A. Drawings and general provisions of Contract, including General and Supplementary Conditions and Division-1 Specification sections, apply to work of this section.
B. This section is a Division-16 Basic Electrical Materials and Methods section, and is part of each Division-15 and -16 section making reference to electrical wires and cables specified herein.

2. DESCRIPTION OF WORK
A. Extent of electrical wire and cable work is indicated by drawings and schedules.
B. Types of electrical wire, cable, and connectors specified in this section include the following:
   1. Copper conductors.
   2. Fixture wires.
   3. Flexible cords and cables.
   4. Wirenut connectors.
C. Applications of electrical wire, cable, and connectors required for project are as follows:
   1. For motor-branch circuits.
   2. For power distribution circuits
   3. For lighting circuits
   4. For appliance and equipment circuits

3. QUALITY ASSURANCE
A. Manufacturers: Firms regularly engaged in manufacture of electrical wire and cable products of types, sizes, and ratings required, whose products have been in satisfactory use in similar service for not less than 5 years.
B. Installer's Qualifications: Firm with at least 3 years of successful installation experience with projects utilizing electrical wiring and cabling work similar to that required for this project.
C. NEC Compliance: Comply with NEC requirements as applicable to construction, installation and color coding of electrical wires and cables.
D. UL Compliance: Comply with applicable requirements of UL Std 83, "Thermoplastic-Insulated Wires and Cables", and Std 486A, "Wire Connectors and Soldering Lugs for Use with Copper Conductors".
E. UL Compliance: Provide wiring/cabling and connector products which are UL-listed and labeled.
F. NEMA/ICEA Compliance: Comply with NEMA/ICEA Std Pub/ No.'s WC 5, "Thermoplastic-Insulated Wire and Cable for the Transmission and Distribution of Electrical Energy", and WC-30, "Color Coding of Wires and Cables", pertaining to electrical power type wires and cables.
G. IEEE Compliance: Comply with applicable requirements of IEEE Stds 82, "Test Procedures for Impulse Voltage Tests on Insulated Conductors", and Std 241, "IEEE Recommended Practice for Electric Power Systems in Commercial Buildings" pertaining to wiring systems.
H. ASTM Compliance: Comply with applicable requirements of ASTM B1, 2, 3, 8, and D-753. Provide copper conductors with conductivity of not less than 98% at 20oC (68oF).

4. AVAILABLE MANUFACTURERS
A. Subject to compliance with requirements, manufacturers offering products which may be incorporated in the work include, but are not limited to, the following:
   1. Wire and Cable:
      a. American Wire and Cable Co.
      b. Anaconda-Ericsson Inc; Wire and Cable Div.
      c. Belden Div; Cooper Industries
   2. Connectors:
      a. AMP, Inc.
      b. Appleton Electric Co.
      c. Burndy Corporation
      d. Thomas and Betts Corp.

5. WIRES, CABLES, AND CONNECTORS
A. General: Provide electrical wires, cables, and connectors of manufacturer's standard materials, as indicated by published product information; designed and constructed as recommended by manufacturer, for a complete installation, and for application indicated. Except as otherwise indicated, provide copper conductors with conductivity of not less than 98% at 20oC (68oF).
B. Building Wires: Provide factory-fabricated wires of sizes, ampacity ratings, and materials for applications and services indicated. Where not indicated, provide proper wire selection as determined by Installer to comply with projects installation requirements, NEC and NEMA standards. Select from the following UL types, those wires with construction features which fulfill project requirements:
   1. Provide conductors having "THW", "XHHW" "THWN" or "THHN" insulation rated not less than 600 volts.
   2. All conductors shall be soft-drawn annealed copper, 98% conductivity, new building wire. Conductors shall comply with the requirements of the NEC for the several services involved.
   3. No wire smaller than No. 12 AWG shall be utilized for any lighting or power circuit, and none smaller than No. 14 AWG shall be utilized for any control circuit.
   4. Conductors No. 10 AWG and smaller shall be solid unless otherwise specified, noted or indicated. Stranded conductors not terminated at solderless connectors shall be furnished with copper connecting lugs, drilled and reamed to the full diameter of the bare conductors.
   5. Main feeders and motor feeders shall run their entire length without joints or splices.
   6. Temperature ratings of conductors shall generally be 75° C. For high temperature applications, the temperature ratings shall be in accordance with the NEC for the ambient condition.
   7. Carry out a uniform and consistent scheme of phase and voltage identification throughout the building systems; identification shall be provided by the permanent color of the selected covering. On large conductors identification shall be secured by means of painted or tape color banding, plus a 1/2-inch wide yellow band on each conductor adjacent to the other color. Color coding shall be in accordance with governing codes, and shall be consistent with any existing color codes, which may be in use.
   8. MC cable conductors shall be 600 volt, insulated, U.L. listed, Solid copper conductors with aluminum interlocked covering. Cable shall have internal separate grounding conductor throughout its entire length.
   9. Direct burial cable conductors shall be limited to maximum of 24 volt and be of a type listed for such use. Conductors shall be multi-conductor cable type with separate integral ground wires.
   10. Unless otherwise noted above for copper conductor specifications. The aluminum conductor shall be used for service entrance feeder. Cable shall be U.L. listed Type SE, style SER and SEU, suitable for operation at 600 volt or less specified in the National Electrical Code. Conductors shall be aluminum alloy 8000 series, weather resistant PVC jacketed. Conductors individual conductors rated XHHW and THHN/THWN or USE-2/RHH/RHW-2
C. Cables: Provide UL-type factory-fabricated cables of sizes, ampacity ratings, and materials and jacketing/sheathing as indicated for services indicated. Where not indicated, provide proper selection as determined by Installer to comply with in-stallation requirements, NEC and NEMA standards.
D. Connectors:
   1. Make splices and connections in conductors using UL listed solderless pressure connectors. For all connections up to a maximum of one (1) No. 6 with two (2) No. 8 conductors, use Ideal "Wingnuts" of required sizes. Connections in conductors or combination of conductors larger than described above shall be made using Burndy cable fittings of the type and size required for the specific duty. After splice is securely "made-up", entire assembly shall be insulated with UL listed insulating tape to a value equivalent to the adjacent insulation. Ground connections shall be made using Burndy ground clamps or connectors of a type suitable and UL listed for duty involved.

6. INSTALLATION OF WIRES AND CABLES
A. General: Install electrical cables, wires, and wiring connectors as indicated, in compliance with applicable requirements of NEC, NEMA, UL, and NECA's "Standard of Installation", and in accordance with recognized industry practices.
B. Coordinate wire/cable installation work including electrical raceway and equipment installation work, as necessary to properly interface installation of wires/cables with other work.
C. Pull conductors simultaneously where more than one conductor is being installed in the same raceway.
D. Use pulling compound or lubricant, where necessary; compound used must not deteriorate conductor or insulation.
E. Use pulling means including, fish tape, cable, rope and basket weave or wire/cable grips which will not damage cables or raceway. Any cable damaged during installation shall be completely replaced.
F. Keep conductor splices to minimum. No joints shall be made in conductor except at outlet boxes or splice boxes. Newly installed conductors shall not be spliced unless specifically noted on the drawings.
G. Install splices and tapes which possess equivalent-or-better mechanical strength and insulation ratings than conductors being spliced.
H. Use splice and tap connectors which are compatible with conductor material.
I. Tighten electrical connectors and terminals, including screws and bolts, in accordance with manufacturer's published torque tightening values. Where manufacturer's torquing requirements are not indicated, tighten connectors and terminals to comply with tightening torques specified in UL Std 486A and B.
J. At least eight inches (8") of slack wire shall be left in every outlet box whether it be in use, or left for future use.
K. Color code wiring as follows:
   1. 120/208 volt, 3 phase, 4 wire: phase A-black, phase B-red, phase C-blue, neutral-white; ground conductor-green.
L. Wire and cable boxes and reels shall bear the date of manufacture and must not bear dates by more than one year preceeding contract date.
M. Minimum conductor sizes, except as specifically identified on the drawings, shall be as follows:
   1. No. 12 - Branch circuits of any kind, except as specified otherwise below.
   2. No. 14 - Signal systems, fire alarm system, unless specifically noted otherwise.
   3. No. 10 - Exit light circuits, emergency circuits, security lighting, security systems circuits and exterior light circuits.

7. FIELD QUALITY CONTROL
A. Prior to energization, test wires and cables for electrical continuity and for short-circuits.

SECTION 16135 - ELECTRICAL BOXES AND FITTINGS

1. RELATED DOCUMENTS
A. Drawings and general provisions of Contract, including General and Supplementary Conditions and Division-1 Specification sections, apply to work of this section.
B. This section is a Division-16 Basic Electrical Materials and Methods section, and is a part of each Division-16 section making reference to electrical wiring boxes and fittings specified herein.

2. DESCRIPTION OF WORK
A. Extent of electrical box and associated fitting work is indicated by drawings and schedules.
B. Types of electrical boxes and fittings specified in this section include the following:
   1. Outlet boxes
   2. Junction boxes
   3. Pull boxes
   4. Floor boxes
   5. Bushings
   6. Locknuts
   7. Knockout closures
   8. Manholes and handholes

3. QUALITY ASSURANCE
A. Manufacturers: Firms regularly engaged in manufacture of electrical boxes and fittings, of types, sizes, and capacities required, whose products have been in satisfactory use in similar service for not less than 3 years.
B. Installer's Qualifications: Firm with at least 3 years of successful installation experience on projects utilizing electrical boxes and fittings similar to those required for this project.
C. NEC Compliance: Comply with NEC as applicable to construction and installation of electrical wiring boxes and fittings.
D. UL Compliance: Comply with applicable requirements UL 50, UL 514-Series, and UL 886 pertaining to electrical boxes and fittings. Provide electrical boxes and fittings which are UL-listed and labeled.
E. NEMA Compliance: Comply with applicable requirements of NEMA Stds/Pub No.'s OS1, OS2, and Pub 250 pertaining to outlet and device boxes, covers, and box supports.

4. FABRICATED MATERIALS
A. Outlet Boxes: Provide galvanized coated flat rolled sheet-steel outlet wiring boxes, of shapes, cubic inch capacities, and sizes, including box depths as indicated, suitable for installation at respective locations. Construct outlet boxes with mounting holes, and with cable and conduit-size knockout openings in bottom and sides. Provide boxes with threaded screw holes, with corrosion-resistant cover and grounding screws for fastening surface and device type box covers, and for equipment type grounding.
   1. Outlet Box Accessories: Provide outlet box accessories as required for each installation, including box supports, mounting ears and brackets, wallboard hangers, box extension rings, fixture studs, cableclamps and metal straps for supporting outlet boxes, which are compatible with outlet boxes being used to fulfill installation requirements for individual wiring situations. Choice of accessories is Installer's code-compliance option.
B. Device Boxes: Provide galvanized coated flat rolled sheet-steel non-gangable device boxes, of shapes, cubic inch capacities, and sizes, including box depths as indicated, suitable for installation at respective locations. Construct device boxes for flush mounting with mounting holes, and with cable-size knockout openings in bottom and ends, and with threaded screw holes in end plates for fastening devices. Provide cable clamps and corrosion-resistant screws for fastening cable clamps, and for equipment type grounding.
   1. Device Box Accessories: Provide device box accessories as required for each installation, including mounting brackets, device box extensions, switch box supports, plaster ears, and plaster board expandable grip fasteners, which are compatible with device boxes being utilized to fulfill installation requirements for individual wiring situations. Choice of accessories is Installer's code-compliance option.
C. Available Manufacturers: Subject to compliance with requirements, manufacturers offering outlet boxes which may be incorporated in the work include, but are not limited to, the following:
   1. Appleton Electric;
   2. Bell Electric;
   3. Eagle Electric Mfg. Co.; Inc.
   4. Midland-Ross Corp.
   5. OZ/Gedney; General Signal Co.
   6. Pass and Seymour, Inc.
   7. RACO Div.; Harvey Hubbell Inc.
   8. Thomas & Betts Co.
D. Raintight Outlet Boxes: Provide corrosion-resistant cast-metal raintight outlet wiring boxes, of types, shapes and sizes, including depth of boxes, with threaded conduit holes for fastening electrical conduit, cast-metal face plates with spring hinged watertight caps suitably configured for each application, including face plate gaskets and corrosion-resistant plugs and fasteners.
E. Available Manufacturers: Subject to compliance with requirements, manufacturers offering raintight outlet boxes which may be incorporated in the work include, but are not limited to, the following:
   1. Appleton Electric;
   2. Crouse-Hinds Co.
   3. Bell Electric;
   4. Harvey Hubbell, Inc.
   5. OZ/Gedney; General Signal Co.
   6. RACO Div.
F. Junction and Pull Boxes: Provide galvanized code-gage sheet steel junction and pull boxes; with screw-on covers; of types, shapes and sizes, to suit each respective location and installation; with welded seams and equipped with stainless steel nuts, bolts, screws, and washers.
G. Available Manufacturers: Subject to compliance with requirements, manufacturers offering junction and pull boxes which may be incorporated in the work include, but are not limited to, the following:
   1. Appleton Electric; Emerson Electric Co.
   2. Arrow-Hart Div.; Crouse-Hinds Co.
   3. Bell Electric; Square D Company
   4. OZ/Gedney; General Signal Co.
   5. Spring City Electrical Mfg. Co.
H. Available Manufacturers: Subject to compliance with requirements, manufacturers offering floor boxes which may be incorporated in the work include, but are not limited to, the following:
   1. Arrow-Hart Div.; Crouse-Hinds Co.
   2. Harvey Hubbell, Inc.
   3. Midland-Ross Corp.
   4. Spring City Electrical Mfg. Co.
I. Bushings, Knockout Closures, and Locknuts: Provide corrosion-resistant box knockout closures, conduit locknuts and malleable iron conduit bushings, offset connections, of types and sizes, to suit respective installation requirements and applications.
J. Available Manufacturers: Subject to compliance with requirements, manufacturers offering bushings, knockout closures, locknuts, and connectors which may be incorporated in the work include, but are not limited to, the following:
   1. Arrow-Hart Div.; Crouse-Hinds Co.
   2. Appleton Electric Co.; Emerson Electric Co.
   3. Bell Electric; Square D Co.
   4. Midland-Ross Corp.
   5. OZ/Gedney Co.; General Signal Co.
K. Manholes and Handholes: Manholes and handholes for exterior use shall be pre-cast concrete with steel traffic rated covers, as manufactured by Brooks or equal. Manholes and handholes shall be the size necessary for the number of conduits and conductors indicated on the drawings which will enter the enclosure, plus the necessary capacity for the spare conduits and the associated estimated conductor fill. Provide manholes with the appropriate drainage and knockouts for conduits and other necessary access. Traffic covers shall be engraved with the appropriate identification, such as "ELECTRIC".

5. INSTALLATION OF ELECTRICAL BOXES AND FITTINGS
A. General: Install electrical boxes and fittings as indicated, in accordance with manufacturer's written instructions, applicable requirements of NEC and NECA's "Standard of Installation", and in accordance with recognized industry practices to fulfill project requirements.
B. Coordinate installation of electrical boxes and fittings with wire/cable, wiring devices, and raceway installation work.
C. Provide weathertight boxes and fittings for interior and exterior locations exposed to weather or moisture.
D. Provide knockout closures to cap unused knockout holes where blanks have been removed.
E. Install electrical boxes in those locations which ensure ready accessibility to enclosed electrical wiring.
F. Avoid installing boxes back-to-back in walls. Provide not less than 24" (600 mm) separation.
G. Position recessed outlet boxes accurately to allow for surface finish thickness.
H. Fasten electrical boxes firmly and rigidly to substrates, or structural surfaces to which attached, or solidly embed electrical boxes in concrete or masonry.
I. Each circuit in pull box shall be marked with a tag guide denoting panels which they connect to.
J. Manholes and handholes shall be installed for all underground conduit installations. The minimum number of manholes and handholes shall be as indicated on the drawings. The contractor shall provide any additional handholes or manholes necessary for ease of installation, code compliance or due to voluntary or required re-routing of the underground conduits at no additional cost to the Owner.

SECTION 16142 - ELECTRICAL CONNECTIONS FOR EQUIPMENT

1. RELATED DOCUMENTS
A. Drawings and general provisions of Contract, including General and Supplementary Conditions and Division-1 Specification sections, apply to work of this section.
B. This section is a Division-16 Basic Electrical Materials and Methods section, and is part of each Division-15 and 16 section making reference to electrical connections for equipment specified herein.

2. DESCRIPTION OF WORK
A. Extent of electrical connections for equipment is indicated by drawings and schedules. Electrical connections are hereby defined to include connections used for providing electrical power to equipment.
B. Applications of electrical power connections specified in this section include the following:
   1. From electrical source to motor starters.
   2. From motor starters to motors.
   3. To lighting fixtures.
   4. To grounds including earthing connections.
   5. To equipment of communication, CCTV and alarm systems.
C. Electrical connections for equipment, not furnished as integral part of equipment, are specified in Division-15 and other Division-16 sections, and are work of this section.
D. Motor starters and controllers, not furnished as integral part of equipment, are specified in applicable Division-16 sections, and are work of this section.
E. Refer to Division-15 specification sections and drawings for motor starters and controllers furnished integrally with equipment; not work of this section. Connections to this equipment is work of this section.
F. Junction boxes and disconnect switches required for connecting motors and other electrical units of equipment are specified in applicable Division-16 sections, and are work of this section.
G. Raceways and wires/cables required for connecting motors and other electrical units of equipment are specified in applicable Division-16 sections, and are work of this section.
H. Refer to other Division-16 and Division-15 sections for low voltage control system wiring; not work of this section.

3. QUALITY ASSURANCE
A. Manufacturers: Firms regularly engaged in manufacture of electrical connectors and terminals, of types and ratings required, and ancillary connection materials, including electrical insulating tape, soldering fluxes, and cable ties, whose products have been in satisfactory use in similar service for not less than 5 years.
B. Installer's Qualifications: Firm with at least 2 years of successful installation experience with projects utilizing electrical connections for equipment similar to that required for this project.
C. NEC Compliance: Comply with applicable requirements of NEC as to type products used and installation of electrical power connections (terminals and splices), for junction boxes, motor starters, and disconnect switches.
D. IEEE Compliance: Comply with Std 241, "IEEE Recommended Practice for Electric Power Systems in Commercial Buildings" pertaining to connections and terminations.
E. ANSI Compliance: Comply with applicable requirements of ANSI/NEMA and ANSI/EIA standards pertaining to products and installation of electrical connections for equipment.
F. UL Compliance: Comply with UL Std 486A, "Wire Connectors and Soldering Lugs for Use with Copper Conductors", including, but not limited to, tightening of electrical connectors to torque values indicated. Provide electrical connection products and materials which are UL-listed and labeled.
G. ETL Compliance: Provide electrical connection products and materials which are ETL-listed and labeled.

4. ACCEPTABLE MANUFACTURERS
A. Available Manufacturers: Subject to compliance with requirements, manufacturers offering products which may be incorporated in the work include, but are not limited to, the following:
   1. AMP Incorporated
   2. Appleton Electric Co.
   3. Arrow-Hart Div., Crouse-Hinds Co.
   4. Burndy Corporation
   5. General Electric Co.
   6. Gould, Inc.
   7. Harvey Hubbell Inc.
   8. Square D Company
   9. Thomas and Betts Corp.

5. MATERIALS AND COMPONENTS
A. General: For each electrical connection indicated, provide complete assembly of materials, including but not necessarily limited to, pressure connectors, terminals (lugs), electrical insulating tape, electrical solder, electrical soldering flux, heat-shrinkable insulating tubing, cable ties, solderless wirenuts, and other items and accessories as needed to complete splices and terminations of types indicated.
B. Metal Conduit, Tubing, and Fittings:
   1. General: Provide metal conduit, tubing, and fit tings of types, grades, sizes, and weights (wall thicknesses) indicated for each type service. Where types and grades are not indicated, provide proper selection as determined by Installer to fulfill wiring requirements and comply with NEC requirements for raceways. Provide products complying with Division-16 basic electrical materials and methods section "Raceways", and in accordance with the following listing of metal conduit, tubing, and fittings:
      a. Rigid steel conduit.
      b. Rigid metal conduit fittings.
      c. Electrical metallic tubing.
      d. EMT fittings.
      e. Liquid-tight flexible metal conduit.
      f. Liquid-tight flexible metal conduit fittings.
      g. Flexible metal conduit.
      h. Flexible metal conduit fittings.
C. Wires, Cables, and Connectors:
   1. General: Provide wires, cables, and connectors complying with Division-16 basic electrical materials and methods section "Wires and Cables".
   2. Wires/Cables: Unless otherwise indicated, provide wires/cables (conductors) for electrical connections which match, including sizes and ratings, of wires/cables which are supplying electrical power. Provide copper conductors with conductivity of not less than 98% at 20oC (68oF).
   3. Connectors and Terminals: Provide electrical con nectors and terminals which mate and match, including sizes and ratings, with equipment terminals and are recommended by equipment manufacturer for intended applications.

6. INSPECTION
A. Inspect area and conditions under which electrical connections for equipment are to be installed and notify Contractor in writing of conditions detrimental to proper completion of the work. Do not proceed with the work until unsatisfactory conditions have been corrected in a manner acceptable to Installer.

7. INSTALLATION OF ELECTRICAL CONNECTIONS
A. Install electrical connections as indicated; in accordance with equipment manufacturer's written instructions and with recognized industry practices, and complying with applicable requirements of UL, NEC, and NECA's "Standard of Installation", to ensure that products fulfill requirements.
B. Coordinate with other work, including wires/cables, raceway and equipment installation, as necessary to properly interface installation of electrical connections for equipment with other work.
C. Connect electrical power supply conductors to equipment conductors in accordance with equipment manufacturer's written instructions and wiring diagrams. Mate and match conductors of electrical connections for proper interface between electrical power supplies and installed equipment.
D. Provide the following electrical work as work of this section, complying with requirements of Division 15 sections:
   1. Power supply wiring from power source to power connection on chiller, fans, air handling units, pumps, duct heaters, water heaters, air compressor, air dryer, and unit control panels. Include starters, disconnects, time clocks, receptacles and required electrical devices, except where specified as furnished, or factory-installed, by manufacturer. Make all final electrical connections.
E. Maintain existing electrical service and feeders to occupied areas and operational facilities, unless otherwise indicated, or when authorized otherwise in writing by Owner, or Architect/Engineer. Provide temporary service during interruptions to existing facilities. When necessary, schedule momentary outages for replacing existing wiring systems with new wiring systems. When that "cutting-over" has been successfully accomplished, remove, relocate, or abandon existing wiring as indicated.
F. Cover splices with electrical insulating material equivalent to, or of greater insulation resistivity rating, than electrical insulation rating of those conductors being spliced. No new conductors shall be spliced unless specifically noted on the drawings.
G. Prepare cables and wires, by cutting and stripping covering armor, jacket, and insulation properly to ensure uniform and neat appearance where cables and wires are terminated. Exercise care to avoid cutting through tapes which will remain on conductors. Also avoid "ringing" copper conductors while skinning wire.
H. Trim cables and wires as short as practicable and arrange routing to facilitate inspection, testing, and maintenance.
I. Tighten connectors and terminals, including screws and bolts, in accordance with equipment manufacturers published torque tightening values for equipment connectors. Accomplish tightening by utilizing proper torquing tools, including torque screwdriver, beam-type torque wrench, and ratchet wrench with adjustable torque settings. Where manufacturer's torquing requirements are not available, tighten connectors and terminals to comply with torquing values contained in UL's 486A.
J. Provide flexible conduit for motor connections, and other electrical equipment connections, where subject to movement and vibration.
K. Provide liquid-tight flexible conduit for connection of motors and other electrical equipment where subject to movement and vibration, and also where connections are subjected to one or more of the following conditions:
   1. Exterior location.
   2. Moist or humid atmosphere where condensate can be expected to accumulate.
   3. Corrosive atmosphere.
   4. Water spray.
   5. Dripping oil, grease, or water, including kitchen areas.

8. FIELD QUALITY CONTROL
A. Upon completion of installation of electrical connections, and after circuitry has been energized with rated power source, test connections to demonstrate capability and compliance with requirements. Ensure that direction of rotation of each motor fulfills requirement. Correct malfunctioning units at site, then retest to demonstrate compliance.

SECTION 16143 - WIRING DEVICES

1. RELATED DOCUMENTS
A. Drawings and general provisions of Contract, including General and Supplementary Conditions and Division-1 Specification sections, apply to work of this section.
B. This section is a Division-16 Basic Electrical Materials and Methods section, and is part of each Division-16 section making reference to wiring devices specified herein.

2. DESCRIPTION OF WORK
A. The extent of wiring device work is indicated by drawings and schedules. Wiring devices are defined as single discrete units of electrical distribution systems which are intended to carry but not utilize electric energy.
B. Types of electrical wiring devices in this section include the following:
   1. Receptacles, including surge suppression type if applicable.
   2. Ground-fault circuit interrupters
   3. Switches
   4. Wallplates
   5. Plugs and connectors
   6. Time Switches / Time Clocks

3. QUALITY ASSURANCE
A. Installer's Qualifications: Firm with at least 2 years of successful installation experience on projects utilizing wiring devices similar to those required for this project.
B. NEC Compliance: Comply with NEC as applicable to installation and wiring of electrical wiring devices.
C. UL Compliance: Comply with applicable requirements of UL 20, 486A, 498, and 943 pertaining to installation of wiring devices. Provide wiring devices which are UL-listed and labeled.
D. IEEE Compliance: Comply with applicable requirements of IEEE Std 241, "Recommended Practice for Electric Power Systems in Comercial Buildings", pertaining to electrical wiring systems.
E. NEMA Compliance: Comply with applicable portions of NEMA Stds Pub/No. WD 1, "General-Purpose Wiring Devices", WD 2, "Semiconductor Dimmers for Incandescent Lamps", and WD 5, "Specific,-Purpose Wiring Devices".
F. FS Compliance: Comply FS W-C-596 (Series) and FS W-S-896 (Series) pertaining to electrical power connectors and toggle switches.

4. SUBMITTALS
A. Product Data: Submit manufacturer's data on electrical wiring devices to Architect.

5. ACCEPTABLE MANUFACTURERS
A. Manufacturers: Subject to compliance with requirements, provide wiring devices of one of the following (for each type and rating of wiring device):
   1. Hubbell
   2. Arrow-Hart Div.
   3. General Electric Co.
   4. Eagle Electric Co.
   5. Leviton
   6. Pass - Seymour
   7. Time Switches: Tork, Intermatic or Paragon

6. FABRICATED WIRING DEVICES
A. General: Provide factory-fabricated wiring devices, in types, colors, and electrical ratings for applications indicated and which comply with NEMA Stds Pub/No. WD 1. Provide bone color devices and bone colored nylon, impact resistant coverplates, except as other wise indicated; color selection shall be verified prior to ordering by Contractor with Architect/Engineer.
B. Receptacles:
   1. Heavy-Duty Duplex: Provide specification grade duplex receptacles, 2-pole, 3-wire, grounding, 20-amperes, 125-volts, with metal plaster ears, design for side and back wiring with spring loaded, screw activated pressure plate, with NEMA configuration 5-20R unless otherwise indicated. Hubbell or equal. 15 amp rated receptacles may be used on circuits with two or more receptacles in accordance with NEC.
   2. Ground-Fault Interrupters: Provide "feed-thru" type ground-fault circuit interrupters, with heavy-duty duplex receptacles, capable of protecting connecting downstream receptacles on single circuit, and of being installed in a 2-3/4" deep outlet box without adapter, grounding type UL-rated Class A, Group 1, rated 20 amperes, 120-volts, 60 Hz; with solid-state ground-fault sensing and indication; with 5 milliamperes ground-fault trip level; equip with NEMA configuration 5-20R. Device must have a positive trip identification and reset. Provide bone color device.
   3. Special Receptacles: Special configuration receptacles shall be standard NEMA plug configuration as specified on the drawings or as required. Provide heavy duty, specification grade receptacles, with black nylon face and brushed satin stainless steel cover plate.
C. Switches:
   1. Snap: Provide general-duty flush single-pole, quiet type toggle switches, 20-amperes, 120-277 volts AC, with mounting yoke insulated from mechanism, equip with plaster ears, switch handle, and side-wired screw terminals.
   2. 2-way: Provide general-duty flush double-pole AC quiet switches, 20-amperes, 120-277 volts AC, with mounting yoke insulated from mechanism, equip with plaster ears, switch handles, side-wired screw terminals, with break-off tab features, which allows wiring with separate or common feed.
   3. Three-way: Provide general-duty flush 3-way AC quiet type switches, 20-amperes, 120-277 volts AC, with mounting yoke insulated from mechanism, equip with plaster ears, lock type switch handles, sidewired screw terminals, with break-off tab features, which allows wiring with separate or common feed.
   4. Four-way: Provide general-duty flush 4-way AC quiet switches, 20-amperes, 120-277 volts AC, with mounting yoke insulated from mechanism, equip with plaster ears, switch handles, side-wired screw terminals, with break-off tab features, which allows wiring with separate or common feed.
   5. Touch Snap: Provide soft-touch snap switches, capable of effortless-fingertip operation; single-pole AC quiet, with lighted rocker switch handles; sidewired screw terminals for connecting copper-clad aluminum wire, 20-amperes, 120-277 volts rating. Equip with plaster ears.
   6. Switches to be bone color with bone colored nylon, impact resistant coverplate, black on millwork / all front of house.
D. Combination Devices: Provide general-duty 3-way quiet switch, 20-amperes, 120-277 volts AC, with toggle switch handle, and 3-wire grounding receptacle, 20 amperes, 120-volts, equip with plaster ears, and with break-off tab feature which allows wiring with separate or common feed, with NEMA configuration 5-20R.
E. Incandescent Lamp Dimmers: Provide Marlin dimming system.
F. Time Switches, Time Clocks: Unless otherwise specifically noted on the drawings provide electro-mechanical 24 hour dial type time switch with day omitting capability and 24 hour reserve timing motor. Provide with a positive manual on-off switch, voltage as required or specified on the drawings, minimum 40 amps per pole, minimum double pole, double throw. Provide additional poles as required or specified on the drawings. Time switches shall be Tork or equal by Intermatic or Paragon.

7. WIRING DEVICE ACCESSORIES
A. Wallplates: Provide wallplates for single and combination wiring devices, of types, sizes, and with ganging and cutouts as required. Select plates which mate and match wiring devices to which attached. Construct with metal screws for securing plates to devices; screw heads colored to match finish of plates. Provide plates possessing the following additional construction features:
   Material and Finish: Bone colored nylon, impact resistant, black on millwork / all front of house
B. Floor Service Outlets: Provide flush type floor service receptacle outlets and fittings of types and ratings indicated. Construct of die cast aluminum, satin finish and of the size necessary for the slab thickness provided. Provide one or two gang box as indicated on the drawings with 20-ampere, 125-volt, duplex receptacle, NEMA configuration 5-20R for power, unless indicated otherwise. Provide data or telephone outlets as indicated with a 3/4" diameter bushed hole for data and a standard telephone outlet for telephone. Boxes shall be sized as required for the number of outlets and number of conductors to enter and leave the box. Provide brass cover plate with snap cover which shall be a protective cover which will prevent breakage of the installed wiring devices. Provide brass tile or carpet flange as required.

8. TELEPHONE/DATA OUTLETS
A. Provide blank bone colored nylon, impact resistant wallplate for all indicated unused telephone/data outlets, black on millwork / all front of house.

ARCHITECT:
DAVID SCOTT WINDLE, AIA
6201 CAMPUS CIRCLE DRIVE E.
IRVING, TEXAS 75038
TEL: 972.870.1288
WWW.IDSTUDIO4.COM
E-MAIL scottw@idstudio4.com

CORPORATE:
BRINKER RESTAURANT CORPORATION,
A VIRGINIA CORPORATION
3000 OLYMPUS BLVD.
DALLAS, TEXAS 75019
972.980.9917
www.brinker.com

09/23/2024
ISSUE FOR BID
THESE DOCUMENTS ARE FOR BIDDING PURPOSES ONLY. DO NOT USE FOR CONSTRUCTION.

RESTAURANT #CH1679
PROTOTYPE 18.5FS

CHILI'S TOOELE
951 N MAIN STREET
TOOELE, UT 84074

CLIENT: BRINKER RESTAURANT CORP.
A VIRGINIA CORPORATION

DATE	DESCRIPTION
6/27/2024	ISSUE FOR PERMIT
9/23/2024	ISSUE FOR BID

	DATE	DESCRIPTION

PROJECT NUMBER:
CHI24007

SHEET TITLE:
SPECIFICATIONS
16110 - 16143

SHEET NUMBER:
SP116

9. INSTALLATION OF WIRING DEVICES

A. Install wiring devices as indicated, in accordance with manufacturer's written instructions, applicable requirements of NEC and NECA's "Standard of Installation", and in accordance with recognized industry practices to fulfill project requirements.
B. Coordinate with other work, including painting, electrical boxes and wiring work, as necessary to interface installation of wiring devices with other work.
C. Install wiring devices only in electrical boxes which are clean; free from excess building materials, dirt, and debris.
D. Install galvanized steel wallplates on any exposed surface mounted devices.
E. Install wallplates after painting work is completed.
F. Tighten connectors and terminals, including screws and bolts, in accordance with equipment manufacturer's published torque tightening values for wiring devices. Where manufacturer's torquing requirements are not indicated, tighten connectors and terminals to comply with tightening torques specified in UL Stds 486A and B. Use properly scaled torque indicating hand tool.
G. Contractor to provide ground fault protective type receptacles for any location within 2'-0" of sinks or other source of water. Feed through protection from one ground fault protected receptacle on a circuit is not acceptable.
H. Mounting height of boxes for devices as shown on legend, unless otherwise noted on the plan. Refer to architectural drawings to avoid interferences with millwork. Where two or more devices are shown at the same location, use gang box and one face plate. Verify all device locations with Owner prior to rough-in. Exact device locations may be adjusted by the Owner to avoid interferences or for general convenience at no additional cost to the Owner.
I. Floor boxes shall be installed flush with the slab and shall strictly follow manufacturer's installation instructions. Boxes shall be installed at right angles to the building lines and multiple boxes shall be in-line straight and even. Boxes observed to be installed crooked shall be removed and reinstalled.

10. PROTECTION OF WALLPLATES AND RECEPTACLES

A. Upon installation of wallplates and receptacles, advise Contractor regarding proper and cautious use of convenience outlets. At time of Substantial Completion, replace those items which have been damaged, including those burned and scored by faulty plugs.

11. GROUNDING

A. Provide equipment grounding connections for wiring devices, unless otherwise indicated. Tighten connections to comply with tightening torques specified in UL Std 486 A to assure permanent and effective grounds.

12. TESTING

A. Prior to circuitry, test wiring for electrical continuity, for short-circuits and for grounding. Ensure proper polarity of connections is maintained. Subsequent to energization, test wiring devices to demonstrate compliance with requirements.

13. WARRANTY

A. All wiring devices, including any dimmers or dimming systems, shall have a minimum one year parts and labor warranty.

SECTION 16150 - MOTOR CONTROLLERS AND CONTACTORS

1. RELATED DOCUMENTS

A. Drawings and general provisions of Contract including General and Division 1 Specification Sections, apply to work of this section.

2. SCOPE

A. The work, apparatus and materials which shall be furnished under these specifications and accompanying drawings shall include all items specified hereinafter and shown on the drawings. All other materials necessary for the complete installation shall be furnished and installed by the Contractor to provide complete electrical systems as indicated on the drawings and as specified herein.
B. Coordinate all required interlocks with Division 15. Motor starters shall contain the necessary auxiliary contacts and control coil voltage to interface with the HVAC temperature control system and fire alarm control system.

3. DESCRIPTION OF WORK

A. Extent of motor controller work is indicated by drawings and schedules. Types of motor controllers specified in this section include the following:

1. Manual motor starters.
2. Combination disconnect/FVNR motor starters.

4. QUALITY ASSURANCE

A. Manufacturers: General Electric, Square D, Allen Bradley.
B. Installer's Qualifications: Firm with at least 3 years of successful installation experience on projects with electrical motor controller work similar to that required for this project.
C. Codes and Standards:

1. NEMA Compliance: Comply with applicable requirements of NEMA Standards Publications pertaining to motor controllers.
2. UL Compliance and Labeling: Comply with applicable requirements of UL safety standards pertaining to motor controllers. Provide motor controllers and components which have been UL-listed and labeled.
3. NEC Compliance: Comply with applicable requirements of NEC pertaining to construction and installation of motor controllers.

5. SUBMITTALS

A. Product Data: Submit manufacturer's technical product data, including specifications and installation instructions, for each type of motor controller required. Include data substantiating that materials comply with requirements to Architect.

6. INDIVIDUAL MOTOR CONTROLLERS

A. Manual motor starters for 115 volts, single phase motors one horsepower and smaller, shall be single pole, horsepower rated switches with thermal overload units and heaters. Starters shall be Allen-Bradley Bulletin 609, General Electric CR-101 or Square D Class 2510 with stainless steel cover plates.
B. Magnetic full voltage starters for three phase motors shall be three pole, horsepower rated, magnetically operated with three thermal overload units and heaters. Starters shall be Allen-Bradley Bulletin 509, General Electric CR-306 or Square D Class 8536. Provide Hand-Off-Auto selector switch, pilot lights to indicate starter's position (Amber - Red - Green), a minimum of two normally open and two normally closed auxiliary contacts, control power transformer fused on primary and secondary, control coil, and three overload heaters with reset button. Provide control power and coil voltage as required for interlock with the HVAC temperature control system and fire alarm system. Starters shall be the Nema size indicated on the drawings but shall be a minimum size one.
C. Combination magnetic, full voltage starters for three phase motors shall be three pole horsepower rated, magnetically operated contacts, with three thermal overload units and heaters. A three pole horsepower rated, fusible disconnect switch shall also be included integral within the enclosure. Provide fuses sized as recommended by the motor manufacturer. Starters shall be Allen-Bradley Bulletin 512, General Electric CR-308 or Square D Class 8538. Provide Hand-Off-Auto selector switch, pilot lights to indicate starter's position (Amber - Red - Green), a minimum of two normally open and two normally closed auxiliary contacts, control power transformer fused on primary and secondary, control coil, and three overload heaters with reset button. Provide control power and coil voltage as required for interlock with the HVAC temperature control system and fire alarm system. Starters shall be the Nema size indicated on the drawings but shall be a minimum size one.
D. Provide enclosure type suitable for the environment in which it is installed. Enclosure shall be interlocked so the door cannot be opened without turning the unit off. This interlock shall be capable of being defeated by properly trained personnel.

7. MOTOR CONTROLLERS, CONTACTORS AND ASSOCIATED CONTROLS

A. Unless otherwise indicated, motor controllers shown on the drawings shall be furnished and installed under this section. The full load current and starting characteristics of each motor shall be verified for proper selection of motor over load devices. The Contractor shall furnish and install all steel shapes, etc., necessary for a support of all motor controllers.
B. Unless otherwise indicated, all control devices, such as thermostats, firestats, etc., shall be installed in place and wired under other sections of the specifications. Coordinate required starter auxiliary contacts and coil voltages for a properly operational system.
C. Motor controllers shall be installed in accordance with all applicable NEC installation requirements.

8. IDENTIFICATION OF EQUIPMENT

A. Identification shall be provided for all motor controllers installed by the Contractor. Identification shall consist of white laminated plastic plates with black engraved letters.

SECTION 16170 - CIRCUIT AND MOTOR DISCONNECTS

1. RELATED DOCUMENTS

A. Drawings and general provisions of Contract, including General and Supplementary Conditions and Division-1 Specification sections, apply to work of this section.
B. Division-16 Basic Electrical Materials and Methods section, apply to work of this section.

2. DESCRIPTION OF WORK

A. Extent of circuit and motor disconnect switch work is indicated by drawings and schedules.
B. Types of circuit and motor disconnect switches in this section include the following:

1. Equipment disconnects.
2. Appliance disconnects.
3. Motor-circuit disconnects.

C. Wires/cables, raceways, and electrical boxes and fittings required in connection with circuit and motor disconnect work are specified in other Division-16 Basic Electrical Materials and Methods sections.

3. QUALITY ASSURANCE

A. Manufacturers: Firms regularly engaged in manufacture of circuit and motor disconnect switches of types and capacities required whose products have been in satisfactory use in similar service for not less than 3 years.
B. Installer's Qualifications: Firm with at least 3 years of successful installation experience with projects utilizing circuit and motor disconnect work similar to that required for this project.
C. NEC Compliance: Comply with NEC requirements pertaining to construction and installation of electrical circuit and motor disconnect devices.
D. UL Compliance: Comply with requirements of UL 98, "Enclosed and Dead-Front Switches". Provide circuit and motor disconnect switches which have been UL-listed and labeled.
E. NEMA Compliance: Comply with applicable requirements of NEMA Stds Pub No. KS 1, "Enclosed Switches" and 250, "Enclosures for Electrical Equipment (1000 Volts Maximum)".

4. SUBMITTALS

A. Product Data: Submit manufacturer's data on circuit and motor disconnect switches.
B. Wiring Diagrams: Submit power and control wiring diagrams for circuit and motor disconnects including connections to power and control panels, and feeders.

5. ACCEPTABLE MANUFACTURERS

A. Available Manufacturers: Subject to compliance with requirements, manufacturers offering circuit and motor disconnects which may be incorporated in the work include the following:

1. General Electric Co.
2. Square D Company
3. ITE/Seimens

6. FABRICATED SWITCHES

A. Heavy-Duty Safety Switches: Provide surface-mounted, heavy-duty type, sheet-steel enclosed safety switches, of types, sizes and electrical characteristics indicated; fusible or non-fusible type as indicated, amperes as indicated, 60 Hz, 3-blades, 4-poles, solid neutral; and incorporating quick-make, quick-break type switches; construct so that switch blades are visible in OFF position with door open. Equip with operating handle which is integral part of enclosure base and whose operating position is easily recognizable, and is padlockable in OFF position; construct current carrying parts of high-conductivity copper, with silver-tungsten type switch contacts, and positive pressure type reinforced fuse clips. Provide NEMA Type 3R enclosures, where applicable. Provide grounding kit. Provide 240 volt rated switches for 208Y/120 volt systems and 600 volt rated switches for 277Y/480 volt systems.

1. Fuses: Provide fuses for safety switches, as recommended by the manufacturer of the equipment to be protected, of classes, types, and ratings needed to fulfill electrical requirements for service indicated. Provide R-clips for all fuse holders.

7. INSTALLATION OF CIRCUIT AND MOTOR DISCONNECT SWITCHES

A. Install circuit and motor disconnect switches as indicated, complying with manufacturer's written instructions, applicable requirements of NEC, NEMA, and NECA's "Standard of Installation", and in accordance with recognized industry practices.
B. Coordinate circuit and motor disconnect switch installation work with electrical raceway and cable work, as necessary for proper interface.
C. Install disconnect switches for use with motor-driven appliances, and motors and controllers within sight of controller position unless otherwise indicated.
D. Provide a nameplate indicating the equipment served and protected.

8. GROUNDING

A. Provide equipment grounding connections, sufficiently tight to assure a permanent and effective ground, for electrical disconnect switches where indicated.

9. FIELD QUALITY CONTROL

A. Subsequent to completion of installation of electrical disconnect switches, energize circuitry and demonstrate capability and compliance with requirements. Where possible, correct malfunctioning units at project site, then retest to demonstrate compliance; otherwise remove and replace with new units and retest.
B. Painting: repair all scratches to factory painted and primed finish with factory supplied touch-up paint.

SECTION 16180 - OVERCURRENT PROTECTIVE DEVICES

1. RELATED DOCUMENTS

A. Drawings and general provisions of Contract, including General and Supplementary Conditions and Division-1 Specification sections, apply to work of this section.
B. This section is a Division-16 Basic Electrical Materials and Methods section, and is part of each Division-16 section making reference to overcurrent protective devices specified herein.

2. DESCRIPTION OF WORK

A. Extent of overcurrent protective device work is indicated by drawings and schedules.
B. Types of overcurrent protective devices in this section include the following:

1. Circuit Breakers:

a. Air, molded-case, for installation in panels.
b. Air, molded-case, for individual, separately enclosed mounting.
c. For installation in existing panels.

2. Fuses:

a. Class RK5, dual-element time-delay.

C. Refer to other Division-16 sections for cable/wire and connector work required in conjunction with overcurrent protective devices; not work of this section.

3. QUALITY ASSURANCE

A. Manufacturers: Firms regularly engaged in manufacture of overcurrent protective devices, of types, sizes, and ratings required, whose products have been in satisfactory use in similar service for not less than 5 years.
B. Installer: Qualified with at least 5 years of successful installation experience on projects with electrical installation work similar to that required for project.
C. NEC Compliance: Comply with NEC requirements as applicable to construction and installation of overcurrent protective devices.
D. UL Compliance: Comply with applicable requirements of UL 489, "Molded-Case Circuit Breakers and Circuit-Breaker Enclosures", and UL 198D, "High-Interrupting-Capacity Class K Fuses". Provide overcurrent protective devices which have been UL-listed and labeled.
E. NEMA Compliance: Comply with applicable requirements of NEMA Std Pub Nos. AB 1, AB 2, and SG 3 pertaining to molded-case and low-voltage power type circuit breakers.
F. FS Compliance: Comply with Federal Specification W-C-375B/GEN pertaining to molded-case circuit breakers.

4. SUBMITTALS

A. Product Data: Submit manufacturer's data on overcurrent protective devices, including: amperes, voltages and current ratings, interrupting ratings, current limitations, internal inductive and non-inductive loads, time-current trip characteristics curves, and mounting requirements.
B. Maintenance Stock, Fuses: For types and ratings required, furnish additional fuses, amounting to one unit for every 5 installed units, but not less than one unit of each.

5. ACCEPTABLE MANUFACTURERS

A. Available Manufacturers: Subject to compliance with requirements, manufacturers offering products which may be incorporated in the work include, but are not limited to, the following:

1. Circuit Breakers: General Electric Co, Square D Co., ITE/Seimens
2. Fuses:Bussmann Div.; McGraw-Edison Co., Gould, Inc., Cefco

6. CIRCUIT BREAKERS

A. General: Except as otherwise indicated, provide circuit breakers and ancillary components, of types, sizes, ratings, and electrical characteristics indicated, which comply with manufacturer's standard design, materials, components, and construction in accordance with published product information, and as required for a complete installation.
B. Molded-Case Circuit Breakers: Provide factory assembled, molded-case circuit breakers of frame size indicated; rated 600 volts or 240 volts as required, 60 Hz, 3-poles with interrupting ratings as shown on drawings. Provide breakers with permanent thermal and instantaneous magnetic trips in each pole, and with fault-current limiting protection, ampere ratings as indicated. Construct with overcenter, trip-free, toggle-type operating mechanisms with quick-make, quick-break action and positive handle trip indication. Handle ties are not permitted. Provide push-to-trip button on cover for mechanical tripping circuit breakers. Construct breakers for mounting and operating in any physical position and operating in an ambient temperature of 40oC. Provide breakers with mechanical screw type removable connector lugs, AL/CU rated. Circuit breakers shall have the short circuit interrupting rated indicated on the drawings or as required for the short circuit current available.
C. Molded-Case Circuit Breakers for Installation in Panelboards: Shall meet the same specifications as in Part B above. Shall be manufactured by the same manufacturer as the panelboard.
D. Provide all accesories indicated on the drawings, including accesories indicated on the panel schedules, such as shunt trips, ground fault protection, undervoltage trips, etc. Accessories shall be manufactured by the same manufacturer as the circuit breaker.
E. All circuit breakers used to protect heating, ventilation or air conditioning circuits shall be listed HACR type.
F. Smart Circuit Breakers for Installation in Panelboards: Shall meet the same specifications as in Part B above. Shall be manufactured by the same manufacturer as the panelboard.

7. FUSES

A. General: Except as otherwise indicated, provide fuses of types, sizes, ratings, and average time/current and peak let-through current characteristics indicated, which comply with manufacturer's standard design, materials, and construction in accordance with published product information, and with industry standards and configurations.
B. Class RK5 Dual-Element Time-Delay Fuses: Provide UL Class RK-5 dual element time-delay fuses rated 600 V, 60 Hz, amperes as required by the manufacturer of the equipment being protected, with 200,000 RMS symmetrical interrupting current rating for protecting motors.

8. INSTALLATION OF OVERCURRENT PROTECTIVE DEVICES

A. Install overcurrent protective devices as indicated, in accordance with manufacturer's written instructions and with recognized industry practices to ensure that protective devices comply with requirements. Comply with NEC and NEMA standards for installation of overcurrent protective devices.
B. Coordinate with other work, including electrical wiring work, as necessary to interface installation of overcurrent protective devices with other work.
C. Fasten circuit breakers without causing mechanical stresses, twisting or misalignment being exerted by clamps, supports, or cabling.
D. Set field-adjustable circuit breakers for trip settings as indicated, subsequent to installation of units.
E. Install fuses, if any, in fused circuit breakers.

9. ADJUST AND CLEAN

A. Inspect circuit-breaker operating mechanisms for malfunctioning and, where necessary, adjust units for free mechanical movement.

10. FIELD QUALITY CONTROL

A. Prior to energization of overcurrent protective devices, test devices for continuity of circuitry and for short-circuits. Correct malfunctioning units, and then demonstrate compliance with requirements.

SECTION 16190 - SUPPORTING DEVICES

1. RELATED DOCUMENTS

A. Drawings and general provisions of Contract, including General and Supplementary Conditions and Division-1 Specification sections, apply to work of this section.
B. This section is a Division-16 Basic Electrical Materials and Methods section, and is a part of each Division-16 section making reference to electrical supporting devices specified herein.

2. DESCRIPTION OF WORK

A. Extent of supports, anchors, sleeves, and seals is indicated by drawings and schedules and/or specified in other Division-16 sections.
B. Types of supports, anchors, sleeves, and seals specified in this section include the following:

1. Clevis hangers
2. C-clamps
3. I-beam clamps
4. One-hole conduit straps
5. Round steel rods
6. Lead expansion anchors
7. Toggle bolts
8. Wall and floor seals

C. Supports, anchors, sleeves, and seals furnished as part of factory-fabricated equipment, are specified as part of that equipment assembly in other Division-16 sections.

3. QUALITY ASSURANCE

A. Manufacturers: Firms regularly engaged in manufacture of supporting devices, of types, sizes, and ratings required, whose products have been in satisfactory use in similar service for not less than 3 years.
B. NEC Compliance: Comply with NEC requirements as applicable to construction and installation of electrical supporting devices.

4. MANUFACTURED SUPPORTING DEVICES

A. General: Provide supporting devices which comply with manufacturer's standard materials, design and construction in accordance with published product information, and as required for complete installation; and as herein specified. Where more than one type of supporting device meets indicated requirements, selection is Installer's option.
B. Supports: Provide supporting devices of types, sizes, and materials indicated; and having the following construction features:

1. Clevis Hangers: For supporting 2" rigid metal con duit; galvanized steel; with 1/2" dia. hole for round steel rod; approximately 54 pounds per 100 units.
2. Reducing Couplings: Steel rod reducing coupling, 1/2" x 5/8"; black steel; approximately 16 pounds per 100 units.
3. C-Clamps: Black malleable iron; 1/2" rod size; approximately 70 pounds per 100 units.
4. I-Beam Clamps: Black steel, 1-1/4" x 3/16" stock; 3/8" cross bolt; flange width 2"; approximately 52 pounds per 100 units.
5. One-Hole Conduit Straps: For supporting 3/4" rigid metal conduit; galvanized steel; approximately 7 pounds per 100 units.
6. Hexagon Nuts: For 1/2" rod size; galvanized steel; approximately 4 pounds per 100 units.
7. Round Steel Rod: Black steel; 1/2" dia.; approximately 67 pounds per 100 feet.
8. Offset Conduit Clamps: For supporting 2" rigid metal conduit; black steel; approximately 200 pounds per 100 units.

C. Anchors: Provide anchors of types, sizes, and materials indicated, with the following construciton features:

1. Lead Expansion Anchors: 1/2", approximately 38 pounds per 100 units.
2. Toggle Bolts: Springhead; 3/16" x 4", approximately 5 pounds per 100 units.

D. Available Manufacturers: Subject to compliance with requirements, manufacturers offering anchors which may be incorporated in the work include, but are not limited to, the following:

1. Abbeon Cal Inc.
2. Ackermann Johnson Fastening Systems, Inc.
3. Elcen Metal Products Co.
4. Ideal Industries, Inc.
5. Joslyn Mfg. and Supply Co.
6. McGraw Edison Co.
7. Rawlplug Co., Inc.
8. Star Expansion Co.
9. Expansion Bolt Co.

E. Sleeves and Seals: Provide sleeves and seals, of types, sizes, and materials indicated, with the following construction features:

1. Wall and Floor Seals: Provide factory-assembled watertight wall and floor seals, of types and sizes indicated; suitable for sealing around conduit, pipe, or buring passing through concrete floors and walls. Construct seals with steel sleeves, malleable iron body, neoprene sealing grommets and rings, metal pressure rings, pressure clamps, and cap screws.

F. U-Channel Strut Systems: Provide U-channel strut system for supporting electrical equipment, 12-gage hot-dip galvanized steel, of types and sizes indicated; construct with 9/16" dia. holes, 8" o.c. on top surface, with standard finish, and with the following fittings which mate and match U-channel.

1. Fixture hangers
2. Channel hangers
3. Thinwall conduit clamps
4. Rigid conduit clamps
5. Conduit hangers
6. U-bolts

G. Available Manufacturers: Subject to compliance with requirements, manufacturers offering channel systems which may be incorporated in the work include, but are not limited to, the following:

1. Greenfield Mfg. Co.; Inc.
2. Midland-Ross Corp.
3. OZ/Gedney Div.; General Signal Corp.
4. Power-Strut Div.; Van Huffel Tube Corp.
5. Unistrut Div.; GTE Products Corp.

H. Pipe Sleeves: Provide pipe sleeves of one of the following:

1. Sheet Metal: Fabricate from galvanized sheet metal; round tube closed with snaplock joint, welded spiral seams, or welded longitudinal joint. Fabricate sleeves from the following gage metal: 3" and smaller, 20-gage; 4" to 6", 16-gage; over 6", 14-gage.
2. Steel Pipe: Fabricate from Schedule 40 galvanized steel pipe; remove burrs.
3. Iron Pipe: Fabricate from cast-iron or ductile-iron pipe; remove burrs.
4. Plastic Pipe: Fabricate from Schedule 40 PVC plas tic pipe; remove burrs.

I. Sleeve Seals: Provide sleeves for piping which penetrates foundation walls below grade, or exterior walls. Calk between sleeve and pipe with non-toxic, UL-classified calking material to ensure watertight seal.

5. INSTALLATION OF SUPPORTING DEVICES

A. Install hangers, anchors, sleeves, and seals as indicated, in accordance with manufacturer's written instructions and with recognized industry practices to insure supporting devices comply with requirements. Comply with requirements of NECA and NEC for installation of supporting devices.
B. Coordinate with other electrical work, including raceway and wiring work, as necessary to interface installation of supporting devices with other work. Coordinate support locations with other structural and mechanical trades. Supports shall not be attached to mechanical or electrical piping, conduit, ductwork, ceiling grid system or any other non-structural member.
C. Install hangers, supports, clamps, and attachments to support piping properly from building structure. Arrange for grouping of parallel runs of horizontal conduits to be supported together on trapeze type hangers where possible. Install supports with spacings indicated and in compliance with NEC requirements.

SECTION 16195 - ELECTRICAL IDENTIFICATION

1. RELATED DOCUMENTS

A. Drawings and general provisions of Contract, including General and Supplementary Conditions and Division-1 Specification sections, apply to work of this section.
B. Division-16 Basic Electrical Materials and Methods section apply to work specified in this section.

2. DESCRIPTION OF WORK

A. Extent of electrical identification work is indicated by drawings and schedules.
B. Types of electrical identification work specified in this section include the following:

1. Electrical power, control, and communication conductors.
2. Operational instructions and warnings.
3. Equipment/system identification signs.

3. QUALITY ASSURANCE

A. Manufacturers: Firms regularly engaged in manufacture of electrical identification products of types required, whose products have been in satisfactory use in similar service for not less than 3 years.
B. NEC Compliance: Comply with NEC as applicable to installation of identifying labels and markers for wiring and equipment.
C. UL Compliance: Comply with applicable requirements of UL Std 969, "Marking and Labeling Systems", pertaining to electrical identification systems.

4. ACCEPTABLE MANUFACTURERS

A. Available Manufacturers: Subject to compliance with requirements, manufacturers offering electrical identification products which may be incorporated in the work include, but are not limited to, the following:

1. Brady, W.H. Co.

5. ELECTRICAL IDENTIFICATION MATERIALS

A. General: Except as otherwise indicated, provide manufacturer's standard products of categories and types required for each application. Where more than single type is specified for an application, selection is Installer's option, but provide single selection for each application.

6. ENGRAVED PLASTIC-LAMINATE SIGNS

A. General: Provide engraving stock melamine plastic laminate, complying with FS L-P-387, in sizes and thicknesses indicated, engraved with engraver's standard letter style of sizes and wording indicated, white face and black core plies (letter color) except as otherwise indicated, punched for mechanical fastening except where adhesive mounting is necessary because of substrate.

1. Thickness: 1/8", except as otherwise indicated.
2. Fasteners: Self-tapping stainless steel screws, except contact-type permanent adhesive where screws cannot or should not penetrate substrate.

7. LETTERING AND GRAPHICS

A. General: Coordinate names, abbreviations and other designations used in electrical identification work, with corresponding designations shown, specified or scheduled. Provide numbers, lettering, and wording as indicated or, if not otherwise indicated, as recommended by manufacturer or as required for proper identification and operation/maintenance of electrical systems and equipment.

8. APPLICATION AND INSTALLATION

A. General Installation Requirements:

1. Install electrical identification products as indicated, in accordance with manufacturer's written instructions and requirements of NEC.
2. Coordination: Where identification is to be applied to surfaces which require finish, install identification after completion of painting.
3. Regulations: Comply with governing regulations and requests of governing authorities for identification of electrical work.

9. OPERATIONAL IDENTIFICATION AND WARNINGS

A. General: Wherever reasonably required to ensure safe and efficient operation and maintenance of electrical systems, and electrically connected mechanical systems and general systems and equipment, including prevention of misuse of electrical facilities by unauthorized personnel, install self-adhesive plastic signs or similar equivalent identification, instruction or warnings on switches, outlets and other controls, devices and doors of electrical enclosures. Where detailed instructions or explanations are needed, provide plasticized tags with clearly written messages adequate for intended purposes.

10. EQUIPMENT/SYSTEM IDENTIFICATION

A. General: Install engraved plastic-laminate sign on each major unit of electrical equipment in building; including central or master unit of each electrical system including communication/ control/signal systems, unless unit is specified with its own self-explanatory identification or signal system. Except as otherwise indicated, provide single line of text, 1/2" high lettering, on 1-1/2" high sign (2" high where 2 lines are required), black lettering in white field. Provide text matching terminology and numbering of the contract documents and shop drawings. Provide signs for each unit of the following categories of electrical work:

1. Switchboard, panelboards, electrical cabinets, disconnect switches and enclosures
2. Access panel/doors to electrical facilities
3. Transformers
4. Intercom system master station
5. TV/audio monitoring master station
6. Fire alarm master station
7. Each switch in main switchboard
8. Communications systems terminal cabinets; sound, CCTV, clock, telephone, etc.

B. Install signs at locations indicated or, where not otherwise indicated, at location for best convenience of viewing without interference with operation and maintenance of equipment. Secure to substrate with fasteners, except use adhesive where fasteners should not or cannot penetrate substrate.

SECTION 16450 - GROUNDING

1. RELATED DOCUMENTS

A. Drawings and general provisions of Contract, including General and Supplementary Conditions and Division-1 Specification sections, apply to work of this section.
B. Division-16 Basic Electrical Materials and Methods section apply to work of this section.

2. DESCRIPTION OF WORK

A. Extent of grounding work is indicated by drawings and schedules.
B. Types of grounding specified in this section include the following:

1. Solid grounding

C. Applications of grounding work in this section including the following:

1. Underground metal water piping
2. Metal building frames
3. Grounding electrodes
4. Grounding rods
5. Service equipment
6. Enclosures
7. Equipment

D. All electrical systems shall be properly grounded to the incoming water service with approved pressure pipe clamps in accordance with Article 250 of the National Electrical Code. All interior raceway systems, the main switchboards, lighting and power panelboards, transformers and all motors over 10 horsepower in size shall be properly grounded. In addition to these, the neutral leg of each voltage system shall be similarly grounded as required by code or as shown. Where motors and other similar devices are connected using rubber cords, the device shall be grounded using a green ground wire properly connected to both the device and the distribution system ground.

3. QUALITY ASSURANCE

A. Manufacturers: Firms regularly engaged in manufacture of electrical connectors, terminals and fittings, of types and ratings required, and ancillary grounding materials, including stranded cable, copper braid and bus, ground rods and plate electrodes, whose products have been in satisfactory use in similar service for not less than 3 years.
B. Installer: Qualified with at least 3 years of successful installation experience on projects with electrical grounding work similar to that required for project.
C. NEC Compliance: Comply with NEC requirements as applicable to materials and installation of electrical grounding systems, associated equipment and wiring. Provide grounding products which are UL-listed and labeled.
D. UL Compliance: Comply with applicable requirements of UL Standards Nos. 467 and 869 pertaining to electrical grounding and bonding.
E. IEEE Compliance: Comply with applicable requirements of IEEE Standard 142 and 241 pertaining to electrical grounding.

4. SUBMITTALS

A. Product Data: Submit manufacturer's data on grounding systems and and accessories.
B. Shop Drawings: Submit layout drawings of grounding systems and accessories including, but not limited to, ground wiring, copper braid and bus, ground rods, and plate electrodes.

5. ACCEPTABLE MANUFACTURERS

A. Available Manufacturers: Subject to compliance with requirements, manufacturers offering grounding products which may be incorporated in the work include, but not limited to, the following:

1. Burndy Corp.
2. Crouse-Hinds Co.
3. Electrical Components Div.; Gould Inc.
4. Thomas and Betts Corp.

6. GROUNDING SYSTEMS

A. Materials and Components:

1. General: Except as otherwise indicated, provide electrical grounding systems indicated; with assembly of materials, including, but not limited to, cables/wires, connectors, terminals (solderless lugs), grounding rods/electrodes and plate electrodes, bonding jumper braid, surge arresters, and additional accessories needed for complete installation. Where more than one type unit meets indicated requirements, selection is Installer's option. Where materials or components are not indicated, provide products complying with NEC, UL, IEEE, and established industry standards for applications indicated.

B. Grounding Electrodes:

1. 3/4 inch diameter, 8 feet length steel rod with electrolytic hardened copper exterior by Copperweld or Thmopson Lighting Protection, Inc.

B. Conductors: Unless otherwise indicated, provide electrical grounding conductors for grounding connections matching power supply wiring materials and sized according to NEC.

1. Equipment and Enclosures: Bare stranded, medium hard drawn copper, size per NEC.
2. Circuit and System: Green, insulated, Type THHN/THWN, copper 90 degrees C, size per NEC.

C. Ground Rods: Solid copper or copper clad steel, minimum 3/4" dia. x 10'. Provide longer rods if necessary for required resistivity.
D. Electrical Grounding Connection Accessories: Provide electrical insulating tape, heat-shrinkable insulating tubing, welding materials, bonding straps, as recommended by accessories manufacturers for type services indicated.
E. Ground enhancement material:" ERICO electrical products group mixture of concrete and electrical conductive material.

7. INSPECTION

A. Installer must examine areas and conditions under which electrical grounding connections are to be made and notify Contractor in writing of conditions detrimental to proper completion of work. Do not proceed with work until unsatisfactory conditions have been corrected in a manner acceptable to Installer.

8. INSTALLATION OF ELECTRICAL GROUNDING

A. General: Install electrical grounding systems where shown, in accordance with applicable portions of NEC, with NECA's "Standard of Installation", and in accordance with recognized industry practices, to ensure that products comply with requirements and serve intended functions.
B. Coordinate with other electrical work as necessary to interface installation of electrical grounding system work with other work.
C. Install clamps on conduits only on thoroughly cleaned metal contact surfaces, to ensure electrical conductivity and circuit integrity.
D. All ground connections to water service entrance shall be installed to be exposed and visible for inspection at all times. Insulation shall not be installed over ground connections.
E. A water pipe, by itself, is not an adequate grounding electrode and must be supplemented by dual grounding electrodes, a minimum of 8 feet apart, and effectively bonded together. The supplemental ground shall be per Code with the "Footing type electrode" taking precedence when possible.
F. All ground connections shall be made on surfaces which have been cleaned of all paint, dirt, oil, etc., so that connections are bare metal to bare metal contact. All ground connections shall be tight and shall be made with U.L. listed grounding devices, fittings, bushings, etc.
G. Duplex receptacles of any amperage shall be grounding type and shall have a separate grounding contact. A separate jumper shall be installed between the grounding terminal on the device and the metallic box. The Contractor may provide U.L. listed self-grounding receptacles in lieu of providing the separate jumper.
H. Single and duplex receptacles shall have all grounded metal mechanically bonded together. Pressure bonding only is not acceptable.
I. Single and duplex receptacles will be installed with the grounding contacts down.
J. Hospital grade or high abuse type which will be installed with the ground contacts up.

1. Shop equipment receptacles shall be installed with the ground contacts up.

K. In all cases where flexible metallic conduit, nonmetallic rigid conduit or liquid tight flexible conduit is used, a green wire ground conductor shall be used to provide ground continuity between the equipment of device and the conduit raceway system.
L. Provide a separate green wire ground conductor for each branch circuit originating from each panelboard. This ground shall be used to ground the device or load fed, and shall be bonded to components of the raceway system, such as junction boxes, starter or disconnect switch enclosures, equipment cases, etc. The green wire ground conductor shall terminate in the panelboard at the green wire ground bus. Ground conductors for branch circuits shall be of size indicated in NEC, except minimum size ground conductor shall be No. 12 AWG.
M. Each branch feeder originating at the switchboard(s) shall have a green wire ground conductor originating at the ground bus in the switchboard and terminating at the green wire ground bus in the panelboard. This green wire ground conductor shall be of size indicated in NEC except in no instance smaller than No. 8 AWG.
N. The green wire ground conductor is in addition to the neutral conductor and in no case shall the neutral conductor serve as the grounding means.
O. Multiple conductors in a single lug not permitted. Each grounding conductor shall terminate in its own terminal lug.

ARCHITECT:

DAVID SCOTT WINDLE, AIA

6201 CAMPUS CIRCLE DRIVE E.
IRVING, TEXAS 75038
TEL: 972.870.1288
WWW.IDSTUDIO4.COM
E-MAIL scottw@idstudio4.com

CORPORATE:
BRINKER RESTAURANT CORPORATION,
A VIRGINIA CORPORATION
3000 OLYMPUS BLVD.
DALLAS, TEXAS 75019
972.980.9917
www.brinker.com

09/23/2024
ISSUE FOR BID
THESE DOCUMENTS ARE FOR BIDDING PURPOSES ONLY. DO NOT USE FOR CONSTRUCTION.

RESTAURANT #CH1679
PROTOTYPE 18.5FS

CHILI'S TOOELE
951 N MAIN STREET
TOOELE, UT 84074

CLIENT: BRINKER RESTAURANT CORP.
A VIRGINIA CORPORATION

DATE	DESCRIPTION
6/27/2024	ISSUE FOR PERMIT
9/23/2024	ISSUE FOR BID

#	DATE	DESCRIPTION

PROJECT NUMBER:
CHI24007

SHEET TITLE:
SPECIFICATIONS
16143 - 16450

SHEET NUMBER:
SP117

SECTION 16470 - DISTRIBUTION SYSTEMS AND EQUIPMENT (600 VOLTS AND BELOW)

1. RELATED REQUIREMENTS
   A. The conditions of the Contract, including the General Conditions and Supplementary Conditions, and Division 00 – Contract and Bid Information, apply to work covered by this Section.
   B. Comply with Division 16 Sections, as applicable. Refer to other Divisions for coordination of work.
2. DESCRIPTION
   A. Provide labor, materials, equipment, tools and services, and perform operations required for, and reasonably incidental to the providing of distribution systems and equipment.
   B. This system shall be as manufactured by W.R. Controls / Wesco Distribution Inc.
3. SERVICE ENTRANCE RATED SWITCHBOARDS
   A. Provide service entrance rated switchboard, UL listed and labeled. Bussing shall be copper. Ampacity and fault current ratings shall be as indicated on the drawings. Provide an engraved nameplate on each main and feeder device. If U.L. listed series rated circuit breakers are utilized, provide an engraved nameplate on switchboard noting type of circuit breakers to be used.
4. PANELBOARDS
   A. Provide circuit breaker lighting panelboards for 277/480V, 3-phase, 4 wire service and 208/120V, 3-phase, 4-wire service or as indicated on the Drawings. Panelboards shall have main circuit breakers or main lugs only as indicated on the Drawings, and shall be sequence-phased, equipped with the quantities and sizes of quick-make, quick-break thermal-magnetic branch circuit breakers of the capacities and multipole configuration as indicated. All buses shall be copper, braced to withstand the stress of a fault equal to the lowest rated branch device. Panelboards shall be furnished in code required gauge galvanized steel cabinets with fronts and doors, and shall be equipped with solid neutral bars having numbered terminals. At the completion of the job, neatly type in on the index card the identification of each circuit. If U.L. listed series rated circuit breakers are utilized, provide an engraved nameplate on panelboard noting type of circuit breakers to be used.
   B. Circuit breakers shall have interrupting capacities to withstand short circuit currents available at the points in the system where they are to be installed.
   C. On all multi-section panelboards, the lugs and buses on each section shall be of the same current rating as the main overcurrent device protecting the feeder serving the panel, and each section shall have a separate neutral, ground bar and phase conductors.
   D. Where double section panels are indicated in the Contract Documents, the incoming panel section buses shall be provided with double lugs, except when the incoming panel section is scheduled to be provided with a main circuit protective device.
5. APPROVED MANUFACTURERS
   A. Approved manufacturers are Cutler Hammer, GE, Siemens, and Square D.
6. SWITCHBOARD/PANELBOARD WIRING
   A. Conductors within the cabinets of switchboards and panelboard shall be neatly laced together with plastic cable clamps, nylon banding or other approved means, and shall be of the length required to allow for bends in conductors (in small sizes bends shall be "square"), and to accomplish neat and strain-free connections.
7. ELECTRIC CONTROLS
   A. Typical control components may consist of but not limited to relays, transformers, contactors, pilot lights, switches, terminal strips, CPI System.
   B. Components will vary depending upon application and additional components other than those mentioned above may be required.
   C. All components shall be factory mounted and wired by WR Controls / WESCO Distribution Inc. unless otherwise specified.
   D. All component wiring shall be copper conductors with a minimum insulation rating of 75°C.

SECTION 16480 - POWER SERVICE ENTRANCE

1. RELATED REQUIREMENTS
   A. The conditions of the Contract, including the General Conditions and Supplementary Conditions, and Division 01 - General Requirements, apply to work covered by this Section.
   B. Comply with Division 26 Sections, as applicable. Refer to other Divisions for coordination of work.
2. DESCRIPTION
   A. Provide labor, materials, equipment, tools and services, and perform operations required for, and reasonably incidental to the providing of electrical services.
   B. The electrical service entrance installation shall comply with the requirements of the electric utility company.
   C. Service entrance conduits shall be schedule 40 PVC or coated rigid galvanized steel as allowed by code and authorities having jurisdiction.
3. SERVICE ENTRANCE EQUIPMENT
   A. Refer to Section 16470.
4. INSTALLATION OF SERVICE ENTRANCE COMPONENTS
   A. Install service entrance components as indicated, in accordance with equipment manufacturer's written instructions, and with recognized industry practices, to ensure that service entrance components fulfill requirements. Comply with applicable installation requirements of NEC and NEMA standards.
   B. Coordinate with other electrical work, including utility company wiring, as necessary to interface installation of service entrance equipment work with other work.
   C. Excavation and Backfill: Refer to Section 16050.
5. GROUNDING
   A. Provide equipment bonding and grounding connectors, sufficiently tight to assure a permanent and effective ground, for service entrance equipment and wiring/cable as indicated.
6. ADJUST AND CLEAN
   A. Adjust operating mechanisms for free mechanical movement.
   B. Touch-up scratched or marred enclosure surfaces to match original finishes.
7. FIELD QUALITY CONTROL
   A. Upon completion of installation of service entrance components and electrical circuitry, energize circuitry and demonstrate capability and compliance with requirements. Correct malfunctioning components at site, then retest to demonstrate compliance; or otherwise, remove and replace with new components and retest.

SECTION 16490 - COMMUNICATION SERVICE ENTRANCE

1.1 RELATED REQUIREMENTS
   A. The conditions of the Contract, including the General Conditions and Supplementary Conditions, and Division 01 - General Requirements, apply to work covered by this Section.
   B. Comply with Division 26 Sections, as applicable. Refer to other Divisions for coordination of work.

1.2 DESCRIPTION
   A. Provide labor, materials, equipment, tools and services, and perform operations required for, and reasonably incidental to the providing of communication service entrances for telephone.
   B. The communication service entrance installation shall comply with the requirements of the respective utility service companies.

1.3 UNDERGROUND SERVICE FROM UNDERGROUND TELEPHONE
   A. Underground conduit(s) shall be scheduled 40 PVC or coated rigid galvanized steel conduits , diameter as indicated on the drawings, as required by telephone utility company.
   B. Hand holes/pull boxes shall be as required by telephone company.
   C. Provide a pull string from origination point to termination point.

1.4 INSTALLATION OF COMMUNICATION SERVICE ENTRANCE COMPONENTS
   A. Install service entrance components as indicated, in accordance with the respective communications utility service company instructions.
   B. Excavation and Backfill: Refer to Section 260500.

SECTION 16510 - INTERIOR BUILDING LIGHTING

1. RELATED DOCUMENTS
   A. Drawings and general provisions of Contract, including General and Supplementary Conditions and Division-1 Specification sections, apply to work of this section.
   B. Division-16 Basic Electrical Materials and Methods section apply to work specified in this section.
2. DESCRIPTION OF WORK
   A. Extent of interior lighting fixture work is indicated by drawings and schedules.
   B. Types of interior lighting fixtures in this section include the following:
      1. Fluorescent
      2. Incandescent
      3. High Intensity Discharge
      4. LED Lighting
   C. Applications of interior lighting fixtures required for project including the following:
      1. General lighting
      2. Supplementary lighting
      3. Task lighting
      4. Emergency lighting
3. QUALITY ASSURANCE
   A. Manufacturers: Firms regularly engaged in manufacture of interior lighting fixtures of types and ratings required, whose products have been in satisfactory use in similar service for not less than 5 years.
   B. Installer: Qualified with at least 3 years of successful installation experience on projects with interior lighting fixture work similar to that required for project.
   C. NEC Compliance: Comply with NEC as applicable to installation and construction of interior building lighting fixtures.
   D. NEMA Compliance: Comply with applicable requirements of NEMA Std Pub Nos. LE 1 and LE 2 pertaining to lighting equipment.
   E. ANSI/IES Compliance: Comply with ANSI 132.1 pertaining to interior lighting fixtures.
   F. ANSI/UL Compliance: Comply with ANSI/UL standards pertaining to interior lighting fixtures for hazardous locations.
   G. UL Compliance: Provide interior lighting fixtures which have been UL-listed and labeled.
   H. CBM Labels: Provide fluorescent-lamp ballasts which comply with Certified Ballast Manufacturers Association standards and carry the CBM label.
4. SUBMITTALS
   A. Product Data: Submit manufacturer's data on interior building lighting fixtures, lamps and ballasts to Architect. Lighting fixtures shall be in strict accordance with the fixture schedule. Substitutions will not be accepted without formal written prior approval. Requests for review of substitutions shall be submit a minimum of 10 days prior to bid. Any other requests will be rejected.
   B. Shop Drawings: Submit fixture shop drawings in booklet form with separate sheet for each fixture, assembled in luminaire "type" alphabetical order, with proposed fixture and accessories clearly indicated on each sheet to Architect.
5. ACCEPTABLE MANUFACTURERS
   A. Manufacturers/Catalog Numbers: Subject to compliance with requirements, provide fixtures manufactured by manufacturers as indicated on the fixture schedule. No substitutions are allowed. Catalog numbers given on the fixture schedule are intended to provide the general description of the required fixture and its quality. Additional accessories, mounting hardware, options, etc., not specifically described by the catalog number but required for a properly operating and installed fixture or as described by additional notation on the drawings or in the specifications, shall be provided. Preferred fixture supplies: Meletio Electic Dallas, Texas (214-352-3900 Bridge Mason).
6. INTERIOR LIGHTING FIXTURES
   A. This Contractor shall furnish and install all lighting fixtures as specified and scheduled for each and every outlet in accordance with the type designation shown on the drawings. If a type designation is omitted, the fixtures shall be of the same type as is shown for rooms of similar usage.
   B. Fixtures are specified in the schedule by manufacturer's name and catalogue number. No substitutions are allowed. Preferred Fixture Supplier: Meletio Electric, Dallas, Texas (214-352-3900 Bridget Mason).
   C. All lighting fixtures for recessed installation shall be furnished with proper thermal cutouts as required by the National Electric Code and shall bear applicable UL labels indicating suitability for a recessed installation as required for each individual application.
   D. Lamps:
      1. All lamps used on this project shall be new, delivered to the job site in the original packing cases and sleeves and shall be of the same manufacturer. All incandescent lamps shall be 130 volt rated if on dimmed circuit. All fluorescent lamps and high intensity discharge lamps shall be of the color and temperature indicated in the lighting fixture schedule. All high intensity discharge lamps for interior application shall be phosphor coated type.
      2. All lamps including parking lot fixture lamps shall be furnished and installed by the General Contractor.
      3. Approved Manufacturers: EcoStory, TCP, General Electric and Liteway.
   E. Ballast for fluorescent and H.I.D. lamps, unless otherwise scheduled shall be Class "A" sound rated, high power factor, two lamps, if possible, and manufactured in accordance with CBM standards ETL certified and UL approved. Each ballast shall be protected by an automatic built-in non-resetting thermal protector in the core and coil assembly. All ballasts shall be rated to operate at deviation which the electric service company is allowed by franchise. Ballasts for fluorescent lamps shall be of the "low energy" type. Exterior fixture ballasts in North prototypes shall be 0° ballasts. Approved manufacturers: Advance, General Electric, Jefferson, and Universal.
7. INSTALLATION OF INTERIOR LIGHTING FIXTURES
   A. This Contractor shall install a lighting fixture as specified and scheduled on each and every outlet in accordance with the type designations shown. If a type designation is omitted, the fixture shall be of the same type as is shown for rooms of similar usage. Verify before purchase and installation.
   B. It shall be the Contractor's responsibility to check the architectural finishes and, regardless of the catalog number prefixes and suffixes shown, furnish frames, supports and hangers, and other miscellaneous appurtenances, to properly coordinate with said finishes. Where ceiling construction requires reinforcing to support the weight of the fixtures, it shall be furnished by this Contractor.
   C. Immediately before final inspection, this Contractor shall thoroughly clean all fixtures inside and out, including plastic and glassware, shall adjust all trim to properly fit adjacent surfaces, replace broken or damaged parts and lamp and test all fixtures for electrical as well as mechanical operation.
8. ADJUST AND CLEAN
   A. Clean interior lighting fixtures of dirt and debris upon completion of installation
   B. Protect installed fixtures from damage during remainder of construction period.
9. FIELD QUALITY CONTROL
   A. Upon completion of installation of interior lighting fixtures, and after building circuitry has been energized, apply electrical energy to demonstrate capability and compliance with requirements. where possible, correct malfunctioning units at site, then retest to demonstrate compliance; otherwise, remove and replace with new units, and proceed with retesting.
   B. At the time of Substantial Completion, replace lamps in interior lighting fixtures which are observed to be noticeably dimmed after Contractor's use and testing, as judged by Owner.
   C. Refer to Division-1 sections for the replacement/restoration of lamps in interior lighting fixtures, where used for temporary lighting prior to time of Substantial Completion.
10. GROUNDING
   A. Provide tight equipment grounding connections for each interior lighting fixture installation.

SECTION 16520 - EXTERIOR BUILDING LIGHTING

1. RELATED DOCUMENTS
   A. Drawings and general provisions of Contract, including General and Supplementary Conditions and Division-1 Specification sections, apply to work of this section.
   B. Division-16 Basic Electrical Materials and Methods section apply to work specified in this section.
2. DESCRIPTION OF WORK
   A. Extent of exterior lighting fixture work is indicated by drawings and schedules.
   B. Types of exterior lighting fixtures in this section include the following:
      1. High Intensity Discharge
      2. Fluorescent
   C. Applications of exterior lighting fixtures required for project including the following:
      1. Outdoor supplementary lighting
3. QUALITY ASSURANCE
   A. Manufacturers: Firms regularly engaged in manufacture of exterior lighting fixtures of types and ratings required, whose products have been in satisfactory use in similar service for not less than 5 years.
   B. Installer: Qualified with at least 3 years of successful installation experience on projects with exterior lighting fixture work similar to that required for project.
   C. NEC Compliance: Comply with NEC as applicable to installation and construction of exterior building lighting fixtures.
   D. UL Compliance: Provide exterior lighting fixtures which are UL-listed and labeled.
   E. CBM Labels: Provide ballasts which comply with Certified Ballast Manufacturers Association standards and carry the CBM label.
4. SUBMITTALS
   A. Product Data: Submit manufacturer's data on exterior lighting fixtures, lamps, and ballasts to Architect.
   B. Shop Drawings: Submit dimensioned drawings of exterior lighting fixture. Submit fixture shop drawings in booklet form with separate sheet for each fixture, assembled in luminaire "type" alphabetical order, with proposed fixture and accessories clearly indicated on each sheet to Architect. Provide photometric data for each fixture type. Clearly indicate fixture lamp and ballast type and manufacturer.
5. ACCEPTABLE MANUFACTURERS
   A. Manufacturers/Catalog Numbers: Subject to compliance with requirements, provide fixtures manufactured by manufacturers as indicated on the fixture schedule. No substitutions are allowed. Catalog numbers given on the fixture schedule are intended to provide the general description of the required fixture and its quality. Additional accessories, mounting hardware, options, etc., not specifically described by the catalog number but required for a properly operating and installed fixture or as described by additional notation on the drawings or in the specifications, shall be provided. Preferred fixture supplies: Meletio Electic Dallas, Texas (214-352-3900 Bridge Mason).
6. EXTERIOR LIGHTING FIXTURES
   A. This Contractor shall furnish and install all lighting fixtures as specified and scheduled for each and every outlet in accordance with the type designation shown on the drawings. If a type designation is omitted, the fixtures shall be of the same type as is shown for rooms of similar usage.
   B. Fixtures are specified in the schedule by manufacturer's name and catalogue number. No substitutions are allowed. Preferred Fixture Supplier: Meletio Electric, Dallas, Texas (214-352-3900 Bridget Mason).
   C. All lighting fixtures for recessed installation shall be furnished with proper thermal cutouts as required by the National Electric Code and shall bear applicable UL labels indicating suitability for a recessed installation as required for each individual application.
   D. Lamps:
      1. All lamps used on this project shall be new, delivered to the job site in the original packing cases and sleeves and shall be of the same manufacturer. All incandescent lamps shall be 130 volt rated if on dimmed circuit. All fluorescent lamps and high intensity discharge lamps shall be of the color and temperature indicated in the lighting fixture schedule. All high intensity discharge lamps for interior application shall be phosphor coated type.
      2. All lamps including parking lot fixture lamps shall be furnished and installed by the General Contractor.
      3. Approved Manufacturers: EcoStory, TCP, General Electric and Liteway.
   E. Ballast for fluorescent and H.I.D. lamps, unless otherwise scheduled shall be Class "A" sound rated, high power factor, two lamps, if possible, and manufactured in accordance with CBM standards ETL certified and UL approved. Each ballast shall be protected by an automatic built-in non-resetting thermal protector in the core and coil assembly. All ballasts shall be rated to operate at deviation which the electric service company is allowed by franchise. Ballasts for fluorescent lamps shall be of the "low energy" type. Exterior fixture ballasts in North prototypes shall be 0° ballasts. Approved manufacturers: Advance, General Electric, Jefferson, and Universal.
7. INSTALLATION OF EXTERIOR LIGHTING FIXTURES
   A. Install exterior lighting fixtures at locations and heights as indicated, in accordance with fixture manufacturer's written instructions, applicable requirements of NEC, NECAs "Standard of Installation", NEMA standards, and with recognized industry practices to ensure that lighting fixtures fulfill requirements.
   B. Coordinate with other electrical work as appropriate to properly interface installation of exterior lighting fixtures with other work.
   C. Fasten fixtures securely to required structural supports; and check to ensure that solid pendant fixtures are plumb.
8. POLES
   A. Light poles shall be furnished with full base covers. Light poles and base covers shall be factory or field painted to match light fixture unless otherwise indicated on plans or schedule .
9. ADJUST AND CLEAN
   A. Clean exterior lighting fixtures of dirt and debris upon completion of installation.
   B. Protect installed fixtures from damage during remainder of construction period.
10. FIELD QUALITY CONTROL
   A. Upon completion of installation of exterior lighting fixtures, and after building circuitry, apply electrical energy to lighting fixtures to demonstrate capability and compliance with requirements. Where possible, correct malfunctioning units at site, then retest to demonstrate compliance; otherwise, remove and replace with new units, and proceed with retesting.
   B. At the time of Substantial Completion, replace lamps in exterior lighting fixtures which are observed to be noticeably dimmed after Contractor's use and testing, as judged by Owner. Furnish stock or replacement lamps amounting to 15% (but not less than one lamp in each case) of each type and size lamp used in each type fixture. Deliver replacement stock as directed to Owner's storage space.
   C. Refer to Division-1 sections for the replacement/restoration of lamps in exterior lighting fixtures, where used for temporary lighting prior to time of Substantial Completion.
11. GROUNDING
   A. Provide tight equipment grounding connections for each exterior lighting fixture installation.

SECTION 16721 - FIRE ALARM AND SMOKE DETECTION SYSTEMS (NOT IN CONTRACT)

1. SECTION INCLUDES
   A. A combination addressable and hard wired fire alarm and smoke detection system.
2. REFERENCES.
   A. NFPA 70 - National Electrical Code - 2005
   B. NFPA 72 - National Fire Alarm Code - 2006.
   D. NFPA 101 - Life Safety Code - 2006.
   E. ANSI All7.1-1986 American National Standard for Buildings and Facilities Providing Accessibility and Usability for Physically Handicapped People.
   F. American With Disabilities Act of 1990 and applicable sections of the Uniform Federal Accessibility Standard.
3. REGULATORY REQUIREMENTS
   A. System: UL listed.
   B. Conform to requirements of NFPA 101 and the Local Fire Marshall.
4. DESCRIPTION OF SYSTEM
   A. The system shall be an addressable, microprocessor based fire alarm control system with transient protection on each circuit and walk-through test capability. The system shall have the capability to control and supervise all the addressable devices and non-addressable appliance and auxiliary control circuits. Each component of the system shall be UL listed for its use. The system shall have a Dynamic LCD display and be located in a constantly attended location while the building is occupied.
5. QUALIFICATIONS
   A. Manufacturer: Company specializing in smoke detection and fire alarm systems with five (5) years documented experience.
   B. Installer: Company specializing in smoke detection and fire alarm systems with five (5) years documented experience with projects of equivalent scope of work and size and certified by the Florida State Licensing Board as fire alarm installing contractor. The actual installer shall be liscensed to install fire alarm systems and shall be certified by the system manufacturer to install the system. Proof of certification and liscensure shall be provided upon request.
6. SUBMITTALS
   A. Submit six (6) copies shop drawings and product data.
   B. Provide complete point to point wiring diagrams, data sheets, and equipment ratings, layout, dimensions, and finishes. Indicate the location of surge protection devices.
   C. Submit manufacturer's installation instructions.
   D. Submit manufacturer's certificate that the system meets or exceeds specified requirements - certification per NFPA 72.
   E. Submit copy of Contractor's license before work begins.
   F. Submit battery calculations indicating the required battery, including the specified spare capacity.
   G. Submit voltage drop calculations.
   H. Provide training for four (4) people on the operation, maintenance, and repair of the system at the Contractor's expense. Training shall be certified by the manufacturer and be at different times for each person. Include transportation, room and board where needed.
7. PROJECT RECORD DRAWINGS
   A. Contractor shall provide (2) plus Electrical sets of as-built drawings to the Owner upon completion of project.
   B. As-builts shall include the location of end-of-line devices, surge protection devices and exact conduit and wire routing. Numbers and types or conductors shall be indicated for each circuit.
8. OPERATION AND MAINTENANCE DATA
   A. Provide (2) plus Electrical copies of operation and maintenance data prior at the completion of construction for all point devices, CPUs, and all other equipment.
   B. Include operating instructions, and maintenance and repair procedures.
   C. Provide manufacturer representative's letter stating that the system is operational.
   D. Maintain system for a minimum of one (1) year, after complete acceptance by the Owner, in accordance with NFPA 72 and 72E.
   E. Provide, at the end of the first year after construction completion, a yearly certification as outlined by the State Fire Marshal's Rule 4A-48.
9. DELIVERY, STORAGE, AND HANDLING
   A. Products shall be delivered to job site in manufacturers original shipping packages.
   B. Provide storage and protection of products, as needed.
10. MANUFACTURERS
   A. Notifier System AFP300.
   B. Equal by EST.
   C. Equal by ADT
   NOTE : Approval of manufacturer's equipment does not any way relieve the Contractor from meeting the performance criteria as outlined in the Plans and Specifications.
11. FIRE ALARM CONTROL PANEL (FACP)
   A. Control panel construction shall be modular with solid state, microprocessor based electronics and shall conform to all requirements made necessary by the Local Fire Marshall. It shall display only those primary controls and displays essential to operation during a fire alarm condition. Keyboards or keypads shall not be required to operate the system during fire alarm conditions. A local audible device shall sound during alarm, trouble or supervisory conditions. This audible device shall sound differently during each condition to distinguish one (1) condition from another without having to view the panel. This audible device shall also sound during each keypress to provide an audible feedback to ensure that the key has been pressed properly. The panel shall be complete with all required cards for the points necessary for all the devices indicated, plus capability for expansion to 30% more points, minimum. Provide the necessary hard wired circuits for all the indicating appliance and auxiliary control devices. Provide a two spare indicating appliance circuits in addition to the required indicating appliance circuits to serve the appliances shown on the drawings.
      1. Provide Voice Evacuation System as required by Local Codes or jurisdiction. Provide microphone, pre-recorded voice message and amplifier and other required devices for a voice annunciated system. Pre-recorded message shall be capable of being revised and re-recored. Confirm exact message required by the local fire marshal prior to installation.
   B. The following primary controls shall be visible through a front access panel:
      1. Eighty character liquid crystal display. Individual red system alarm LED.
      2. Individual yellow supervisory service LED. Individual yellow trouble LED.
      3. Green "power on" LED.
      4. Alarm acknowledge key.
      5. Supervisory acknowledge key.
      6. Trouble acknowledge key.
      7. Alarm silence key.
      8. System reset key.
   C. The control shall provide the following:
      1. Setting of time and date.
      2. LED testing. Alarm, trouble, and abnormal condition listing.
      3. Enabling and disabling of each monitor point separately.
      4. Activation and deactivation of each control point separately.
      5. Changing operator access levels.
      6. Walk test enable.
      7. Running diagnostic functions.
      8. Displaying software revision level.
      9. Displaying historical logs.
      10. Displaying card status.
      11. Point listing.
      12. Speaker silence switch.
   D. For maintenance purposes, the following lists shall be available from the point lists menu.
      1. All points listed by address.
      2. Monitor point list.
      3. Signal/speaker list.
      4. Auxiliary control list.
      5. Feedback point list.
      6. Pseudo point list.
      7. LED/switch status list.
12. DEVICES AND ACCESSORIES
   A. Manual Station: Semi-flush mounted, supervised, normally open single action manual station. Manual stations shall be single action and shall be constructed of cast metal or lexan with raised white lettering and a smooth high gloss finish. The station shall have a hinged front with key lock. stations which utilize screwdrivers, Allen wrenches, or other commonly available tools shall not be accepted. Stations shall be keyed alike with the fire alarm control panel. When the station is operated, the handle shall lock in a protruding manner to facilitate quick visual identification of the activated station. Stations shall be the addressable type.
   B. Heat Detector: Easy installation, low profile with wide base to cover mounting plate and box. Detectors shall be white and have a dangling disk to indicate element operation. Detectors will be fixed temperature with thermostats rated at 135 degrees F, except when the plans call for a 194 or 200 degrees F rating. The detector shall be the addressable type for use with an addressable system and shall be UL listed for this purpose.
      1. Heat detectors installed in hazardous environments shall be the explosion proof type.
   C. Smoke Detectors: NFPA 72E; photoelectric type with plug-in base, supervised visual indication of detector actuation, suitable for mounting on four inch (4") outlet box.
      1. Detectors shall be listed to U.L. Standard 268 and shall be documented compatible with the control equipment to which it is connected. Detectors shall be listed for this purpose by Underwriters Laboratories, Inc. The detectors shall obtain their operating power from the fire alarm panel supervised detection loop. The operating voltage shall be 24 VDC (nominal). Removal of the detector head shall interrupt the supervisory circuit of the fire alarm detection loop and cause a trouble signal to be generated at the control panel. Detectors shall be the addressable type for use on an addressable type system.
      2. Each detector shall have a flashing status indicating LED for visual supervision. When the detector is actuated, the flashing LED will latch on steady and at full brilliance. The detector may be reset by actuating the control panel reset switch.
      3. To minimize nuisance alarms, voltage and RF transient suppression techniques shall be employed as-well-as a smoke verification circuit and an insect screen. The detector design shall provide full solid-state construction and compatibility with other normally open fire alarm detection loop devices (heat detectors, pull stations, etc.). The detector head shall be easily disassembled to facilitate cleaning.
   D. Horns/Speakers: Moisture repellent, fire retardant speaker or horn designed for smooth frequency response with minimal distortion. Horn/Speakers shall be listed and approved for use as a fire alarm indicating appliance. Horn/Speakers shall all sound the same general alarm sound. Outdoor speakers shall be weatherproof and listed for use as an outdoor fire alarm indicatong appliance.
      1. Sound Level: 87 dB at 10 feet not to exceed 120 dbA.
   E. Visual Flashing Lamps (Xenon Strobe): Visual indicating appliances shall be comprised of xenon flashtube and be entirely solid state. These devices shall be UL listed and be capable of either ceiling or wall mounting. The lexan lens shall be pyramidal in shape to allow better visibility. Separate alarm indicating circuits shall be provided for strobes. The maximum strobe pulse duration shall be 0.2 seconds with a maximum duty cycle of 40 percent. The intensity shall be a minimum 100 candela and the flash rate shall be at least 1 Hz but not to exceed 3 Hz. Strobe must meet current ADA requirements.
   F. Audio/Visual Alarm Indicating Appliance: Audio/Visual units shall provide a common enclosure for the fire alarm audible and visual alarm devices. The housing shall be designed to accommodate either horns, bells, chimes, or speakers. The unit shall be complete with a tamper resistant, pyramidal shaped lexan lens with "Fire" lettering visible from a 180 degree field of view. The front panel or bezel which is constructed of cast metal maybe inverted so that the lens is below the audible device. The lamp assembly shall incorporate a built-in reflector for more efficient light propagation and a special shock-mounting arrangement to resist 'Bulb failure due to vibration. Lamp shall be provided with a 4 wire connection to insure properly supervised in/out system connection. Unit shall be complete with all mounting hardware including backbox. Audio/Visual unit shall be UL Listed for its intended purpose. The visual flashing lamps shall meet the specification indicated above in Part E.
      1. Minimum dB: 87 dB at 10 feet per UL 464.
   G. Duct Smoke Detectors: Duct smoke detectors shall be of the solid state photoelectric type and shall operate on the light scattering photodiode principle. The detectors shall be designed to ignore invisible airborne particles or smoke densities that are below the factory set alarm point. No radioactive materials shall be used. Detectors shall be the addressable type for use on an addressable type system. Detectors shall be provided with the capability of performing automatic fan shutdown either directly from the detector or via the main control panel. All required wiring and supervision shall be provided for all required fan shutdown. Provide all relays and supervise relays as required.
   H. Provide all required auxiliary control circuits for hood fire suppression system supervision, appliance shutdown, door release, hood supply fan shutdown, gas shutdown, dampers, valve closure and other required control functions located on the drawings or otherwise specified. All auxiliary control circuits shall be indicated on the annunciator as a separate zone or shall be addressable so the device can be identified quickly and accurately.
   I. Provide wall mounted, magnetic door holder/automatic door release devices. Door holder shall have a minimum 25 lbs. holding force.
13. BATTERY BACK-UP
   A. The system shall be battery back-up for 24 hours with five (5) minutes of alarm capabilities (per NFPA 72) with all system indicating appliances operating, including strobes. Provide battery with 30% spare capacity for the potential addition of indicating appliances.
14. LIGHTNING PROTECTION
   A. Provide surge protection on all circuits.
   B. Provide lightning protection at all points entering and leaving the building (including walkways) and at the FACP location shown on the drawings. The 120 volt power circuit shall be provided with lightning protection.
   C. Surge protection shall be manufactured and listed for use with the fire alarm system.
15. ENTIRE BUILDING
   A. All pull stations, heat detectors, and smoke detectors shall, when placed in an alarm mode, sound the building general alarm, flash strobe lights, shutdown AHUs, release door holders, and annunciate the address of the initiating device or the zone of any other existing hard wired devices to the FACP.
   B. All pull stations, heat detectors, smoke detectors, and duct smoke detectors shall, when placed in a trouble mode, indicate the address of the device or zone of any existing device experiencing trouble to the FACP.
   C. Duct smoke detectors shall be hardwired interlocked to shutdown their respective units on alarm or detection of smoke. Duct smoke detectors shall sound a supervisory signal to the FACP and shall not sound the general alarm.
   D. The system shall be fully programmed and completely operational prior to acceptance. The FACP and CPU shall have the capability to be fully programmable by Owner's personnel.
   E. The Manufacturer shall provide the necessary documentation and training to allow the Owner's personnel to maintain and change software.
   F. Program data shall be stored in non-volatile memory with battery back-up. Program data shall not be lost due to temporary outages, surges, dips, etc.
16. INSTALLATION OF FIRE ALARM AND DETECTION SYSTEMS
   A. Install fire alarm and detection systems as indicated, in accordance with equipment manufacturer's written instructions and complying with applicable portions of NEC and NECAs "Standard of Installation" and NFPA-72E.
   B. Wiring Systems and Materials
      1. Wiring shall be in accordance with requirements of the National Electrical Code and NFPA Regulation 72. The fire alarm system, including components, conduit, boxes and wiring shall be completely installed and wiring and conduit shall be properly tagged and color coded. The Electrical Contractor shall make final connections as shown and required by the equipment manufacturer's wiring instructions.
      2. Color Code - The color codes of the fire alarm cabling shall conform with the following:
         a. Speaker - Red (+) and Black (-).
         b. Pull Station/Heat/Smoke Detector - Blue and Yellow.
         c. Fan shut-down - White.
         d. Visual Flashing Lamps (Xenon Strobes) - Purple and Orange.
         e. Spare wires - Any different color, must be same throughout the building.
      3. All wiring to be installed in conduit with continuous ground.
      4. All junction box covers shall be painted red. All lengths of conduits shall have at least one red stripe.
      5. AHU shutdown relays and equipment control relays shall be mounted within three (3) feet of controlled device. AHU shutdown relays shall be wired on a separate circuit.
      6. Visual flashing lamps and speakers shall be wired on alternate circuits to provide coverage in the event of the failure of one circuit. Provide the required number of circuits for the indicated number of alarm indicating devices.
   C. Provide conduit, wire and circuit breakers to connect fire alarm control panels to emergency circuit. The fire alarm circuit breaker shall be accessible to authorized personnel only and shall be marked FIRE ALARM CIRCUIT CONTROL. Provide handle lock for circuit breaker handle.
   D. Provide a disable switch for system speakers at the Fire Alarm Control Panel. Label switch 'ALARM SILENCE SWITCH'. (If the switch is left in the disable position during normal system operation, a trouble signal shall sound at the control panel.).
17. QUALITY ASSURANCE
   A. NEC Compliance comply with NEC as applicable to construction and installation of fire alarm and detection system components and accessories.
   B. UL Compliance and Labeling - Provide fire alarm and detection system components which are UL listed and labeled. Installation is to be by a UL listed installer.
   C. Misc. compliance - The fire alarm system is to be installed in accordance with the equipment manufacturer's written instructions and comply with all applicable portions of the NECAs "Standard Installation" and all local codes and ordinances.
18. FIELD QUALITY CONTROL
   A. Inspect relays and signals for malfunctioning, and where necessary adjust units for proper operation to fulfill project requirements. Any fine adjustment shall be performed by specially trained personnel in direct employ of manufacturer of the fire alarm detection system equipment. The Manufacturer's representative shall perform a quality inspection off the final installation and, in the presence of the Electrical Contractor, Architect/Engineer, and Owner's Representatives, shall perform a complete functional test of the system. A system certification verifying the proper system operation shall be required prior to acceptance by the Owner.
19. SYSTEM GUARANTEE
   A. All components, parts, and assemblies supplied by the Manufacturer shall be guaranteed against defects in materials and workmanship for a period of twelve (12) months commencing the date of substantial completion. Warranty service shall be provided by a qualified factory trained representative of the equipment manufacturer. Service response time shall be a maximum of four (4) hours before arrival to site.
   B. Testing: The Contractor shall perform all electrical and mechanical tests required by the equipment manufacturer's form and National Fire Protection Association - 72H. All test and report costs shall be in the contract price. A checkout report shall be prepared by the installation technicians and submitted in triplicate, one (1) copy of which will be registered with the equipment manufacturer. The report shall include, but not be limited to:
      1. A complete list of equipment installed and wired.
      2. Indication that all equipment is properly installed and functions and conforms with these specifications.
      3. Test result of individual initiating devices and indicating appliances.
      4. Serial numbers, locations by zone and model number for each installed detector.
      5. Response time on thermostats and flame detectors (if used).
      6. Technician's name, certificate number and date.
   C. Documentation: After completion of the tests and adjustments listed above, the Contractor shall submit the following information to the Owner.
      1. A copy of the test report described in this specification and a Certificate of Compliance prepared as per National Fire Protection Association Standard 72A Chapter 2, Section 2-2.4, and State Fire Marshal's Rule 4A-48 to be complete at final test.
      2. Affixed to FACP a standard service tag, as described in rule 4A-48 for fire alarm contractors by the Office of the State Fire Marshal.
      3. Final tests and inspection shall be held in presence of the Owners' representatives and to their satisfaction. The Contractor shall supply personnel and required auxiliary equipment for this test without additional cost to the Owner.
      4. To assure that wire size, power supply, number of devices on a circuit, etc. are suitable to support 100% of devices being in alarm or operated simultaneously, this test shall include the following:
         a. Place all sensors and monitor modules in alarm. Each shall display it's address and alarm condition. At least the first ten (10) devices on each circuit shall also have their alarm LEDs lighted.
         b. Operate all control modules for the alarm or operated condition. Each module shall display it's address and condition.
         c. Reset all alarmed and operated devices. The panel shall display the address or zone of any off-normal devices.
         d. Test a representative number of sensors for alarm verification by momentarily testing for alarm. The sensor shall not initiate an alarm. Then, test by placing the sensor in alarm such that it remains in alarm for the selected verification time. The sensor shall initiate an alarm.
         e. Acceptance of the system shall also require a demonstration of the stability of the system. This shall be adequately demonstrated if the system operates for a ninety (90) day test period without any unwarranted alarms. Should unwarranted alarm(s) occur, the Contractor shall readjust or replace the detector(s) and begin another ninety (90) day test period. As required by the Engineer the Contractor shall recheck the detectors using the fire test after each readjustment or replacement of detectors. This test shall not start until the Owner has obtained beneficial use of the building under tests.

ARCHITECT:

DAVID SCOTT WINDLE, AIA

6201 CAMPUS CIRCLE DRIVE E.
IRVING, TEXAS 75038
TEL: 972.870.1288
WWW.IDSTUDIO4.COM
E-MAIL scottw@idstudio4.com

CORPORATE:
BRINKER RESTAURANT CORPORATION,
A VIRGINIA CORPORATION
3000 OLYMPUS BLVD.
DALLAS, TEXAS 75019
972.980.9917
www.brinker.com

09/23/2024
ISSUE FOR BID
THESE DOCUMENTS ARE FOR BIDDING PURPOSES ONLY. DO NOT USE FOR CONSTRUCTION.

RESTAURANT #CH1679
PROTOTYPE 18.5FS

CHILI'S TOOELE
951 N MAIN STREET
TOOELE, UT 84074

CLIENT: BRINKER RESTAURANT CORP.
A VIRGINIA CORPORATION

DATE	DESCRIPTION
6/27/2024	ISSUE FOR PERMIT
9/23/2024	ISSUE FOR BID

⚠	DATE	DESCRIPTION

PROJECT NUMBER:
CHI24007

SHEET TITLE:
SPECIFICATIONS
16470 - 16721

SHEET NUMBER:
SP118

f. If the requirements provided in the paragraph above are not completed within thirty (30) days after beginning the tests described therein, the Contractor shall replace the system with another acceptable manufacturer and the process repeated until acceptance of the equipment by the Owner.

g. Before final acceptance of work; the Contractor shall deliver (2) plus Electrical copies of a composite "Operating and Shop Maintenance Manual." Each manual shall contain, but not be limited to:

h. A statement of guarantee including date of termination and name and phone number of the person to be called in the event of equipment failure.

i. Individual factory issued manuals containing all technical information on each piece of equipment installed. In the event that such manuals are not obtainable from the factory, it shall be the responsibility of the Contractor to compile and include them. Advertising brochures or operational instructions shall not be used in lieu of the required technical manuals.

j. One (1) copy of all approved shop drawings, instruction sheets, operating instructions, and spare parts bulletins.

k. A training session, for personnel selected by the Owner, shall be presented by a fully qualified, trained representative of the equipment manufacturer who is thoroughly knowledgeable of the specific installation.

l. Provide a written description of standard control panel functions and user instructions at each FACP. These instructions shall be written in standard laymen's English so that an unfamiliar operator can accomplish basic functions such as reset.

D. Warranty : All equipment and systems shall be warranted by the Contractor for a period of one (1) year following the date of final acceptance. The warranty shall include parts, labor, prompt field service, pick-up, and delivery.

1. Provide one (1) year of testing as per National Fire Protection Association 72, which shall consist of:

2. At the end of the one year warranty period provide a Test and Written report which certify that all initiating devices have been tested and which indicate the result of the inspection as required by the Owner. Provide the required certification tag. Problems discovered during this testing and inspection shall be covered under the warranty. It is the contractor's responsibilty to perform this testing prior to the end of the one year warranty or provide an extended warranty if the test is performed after the warranty period was scheduled to expire.

ARCHITECT:

DAVID SCOTT WINDLE, AIA

6201 CAMPUS CIRCLE DRIVE E.
IRVING, TEXAS 75038
TEL: 972.870.1288
WWW.IDSTUDIO4.COM
E-MAIL scottw@idstudio4.com

CORPORATE:
BRINKER RESTAURANT CORPORATION,
A VIRGINIA CORPORATION
3000 OLYMPUS BLVD.
DALLAS, TEXAS 75019
972.980.9917
www.brinker.com

09/23/2024

ISSUE FOR BID

THESE DOCUMENTS ARE FOR BIDDING PURPOSES ONLY. DO NOT USE FOR CONSTRUCTION.

RESTAURANT #CH1679
PROTOTYPE 18.5FS

CHILI'S TOOELE

951 N MAIN STREET
TOOELE, UT 84074

CLIENT: BRINKER RESTAURANT CORP.
A VIRGINIA CORPORATION

DATE	DESCRIPTION
6/27/2024	ISSUE FOR PERMIT
9/23/2024	ISSUE FOR BID

△	DATE	DESCRIPTION

PROJECT NUMBER:

CHI24007

SHEET TITLE:

SPECIFICATIONS
16721

SHEET NUMBER:

SP119

APPROVED

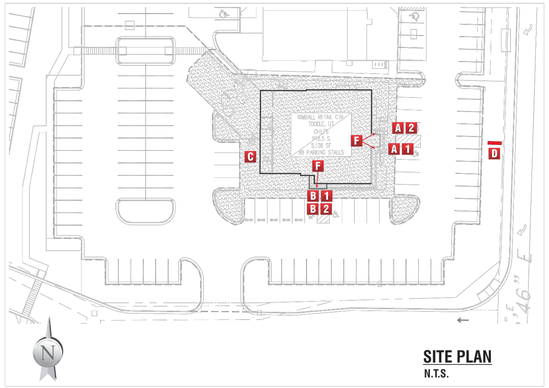

SITE PLAN
N.T.S.

SIGN SCHEDULE

A 1	8'-0" OCL/ HALO PEPPER-S / SILVER CLOUD | ONE (1) REQ.
A 2	7'-6" PCL/LED WORDMARK | ONE (1) REQ.
B 1	7'-0" OCL/ HALO PEPPER-S/ SILVER CLOUD| ONE (1) REQ.
B 2	6'-0" PCL/ LED "TO GO" ON RACEWAY | ONE (1) REQ.
C	8'-5" PCL "CHILI'S" WORDMARK ON CLOUD BKGD | ONE (1) REQ.
D	D/F MONUMENT SIGN W/ PLEX-FACED CHANNEL LTRS - ONE (1) REQ'D
F	LED Lighting accent on towers. - SEE ROOF PLAN

NOTE BELOW FOR ALL FOLLOWING PAGES AS REQUIRED.

CUSTOMER TO PROVIDE:
(For New / Remodel Construction) ADEQUATE BEHIND THE WALL BACKING AND ACCESS AS REQUIRED TO INSTALL SIGNAGE. CUSTOMER TO FORWARD COPY OF FINAL APPROVED SIGNAGE DRAWINGS TO BUILDING SITE CONTACT SO THAT THESE PROVISIONS CAN BE MADE DURING CONSTRUCTION AND PRIOR TO SIGN INSTALLATION.

ALL BRANCH(PRIMARY ELECTRICAL SERVICE) CIRCUITS FINAL CONNECTION TO EACH SIGN(WITHIN 5 FT.)TO BE BY CERTIFIED ELECTRICIAN:
A. All branch circuits for signs must be totally dedicated to signs (including dedicated ground and dedicated neutral per circuit).
B. Sign circuits must not be shared with other loads such as lighting, air conditioning, and other equipment.
C. Sign circuits must be on a time clock that is separate from the building time clock and must be provided.
D. Number and size of circuits for each sign to meet Federal Heath Sign's requirement.

Any deviation from the above recommendations may result in:
1. Damage to or improper operation of the sign(s).
2. Delays and additional costs.

Notes: □ Certain electrical components of signs will fail prematurely if signs are not shut-off for a period of time, once, each day. For best performance, we recommend signs to be connected to an automatic controlling device such as an Energy Management System, Time Clock or Photo Cell that automatically shuts-off the sign for a period of time, each day. Failure to do so will cause damage to the electrical components of the sign and will void the warranty.

□ Some dimming devices will also adversely affect sign electrical components, causing failure. Any dimming of the sign without consultation with Federal Heath Sign Co. will void the warranty.

INSTALLER IS RESPONSIBLE FOR:
PROVIDING AND INSTALLING ALL COMPONENTS REQUIRED TO RUN SECONDARY WIRING (CONNECTORS, GTO CONDUIT, ETC.) TO BE DETERMINED BY LOCAL CODE AND SITE CONDITIONS.

ELECTRICAL NOTES:
INSTALLATION OF THESE (ELECTRICAL) SIGNS SHALL CONFORM TO THE REQUIREMENTS OF ARTICLE 600 OF THE N.E.C., U.L. 48 AND / OR OTHER APPLICABLE LOCAL CODES.
THIS INCLUDES PROPER GROUNDING AND BONDING OF THE SIGN.

PROVIDING ALL NEEDED INSTALLATION HARDWARE AS DETERMINED BY LOCAL CODE AND SITE CONDITIONS.

SEALING BUILDING PENETRATIONS WITH SILICONE TO PREVENT MOISTURE PENETRATION @ EXTERIOR LOCATIONS..

FEDERAL HEATH SIGN COMPANY
www.federalheath.com
1845 Precinct Line Road, Suite 100, Hurst, Texas 76054
T 817.285.0674 F 817.285.0153

Revisions:
Original Drawing: DM2.7.17.24
R1) Cog. mon. to end; w/ curved cap on base. DM2.7.18.24
R5) Decrease size of base on monument. DM2.7.19.24

Account Rep: Michelle Busing
Project Manager: Mark Morehart
Drawn By: Melanie Gray
Project / Location:
W. 1000 N & Main Street
Tooele, UT 84074

Client Approval/Date:
Landlord Approval/Date:

This original drawing is provided as part of a planned project and is not to be exhibited, copied or reproduced without the written permission of Federal Heath Sign Company LLC or its authorized agent. © FHSC
Colors Depicted In This Rendering May Not Match Actual Material Finishes. Refer To Product Samples For Exact Color Match.

Job Number: 23-85060-10
Date: July 19, 2024
Sheet Number: 1 Of 7
Design Number: 23-85060-10 R10

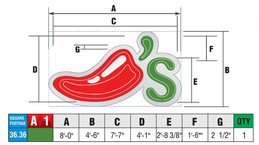

SQUARE FOOTAGE	A 1	A	B	C	D	E	F	G	QTY
36.34		8'-0"	4'-6"	7'-7"	4'-1"	2'-8 3/8"	1'-9""	2 1/2"	1

VINYL COLORS: WHITE 3630-20 (Opt.) | RED 3630-59 | BLACK 3630-53 | BLUE 3630-57 | GREEN 3630-61 | GOLD 3630-70 | SILVER 3630-77 | * Apply 3630-22 Black Vertical Silver to Opaque Cut When Required
COLORS: WHITE LED | YELLOW GREEN LED | GOLD LEDS | PEPPER GREEN | PEPPER RED | PEPPER YELLOW | PEPPER ORANGE

A 1 Front & Backlit OCL Pepper-S with Self-contained Transformers

PEPPER S:
FRONT AND BACKLIT "PEPPER S" : 8" OVERALL DEPTH (3"+5") OPEN CHANNEL PEPPER S.
RETURNS INSIDE AND OUTSIDE PAINTED TO MATCH FACE COLORS (RED OR GREEN)
W/ EXPOSED NEON (NO PK HOUSINGS) ON FRONT FACE TO BE:
-CLEAR RED NEON
-#10 GREEN NEON
-3500k WHITE AT HIGHLIGHT.

PAINT 3" ALUMINUM PERIMETER CHANNEL (HIGHLITE) AROUND WHITE AREAS WHITE (INSIDE AND OUT)
*PEPPER S" TO HAVE 3" STANDOFF FROM BKGD. PANEL AND HALO BACKLIGHTED W/ CHILI'S WHITE JT LED's.
*PEPPER S" TO MOUNT ON A .125" FLAT ALUM. PANEL BKGD. CLOUD PAINTED
T/M SPRAYLAT #171 BRUSHED ALUMINUM AND TO BE CLIP- MOUNTED TO WALL.
*PEPPER S" TO HAVE A CLEAR LEXAN BACKER PANEL OVERLAYED W/ 210-314 DUSTED CRYSTAL VINYL.

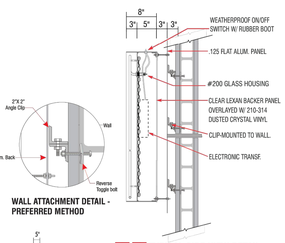

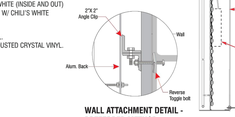

WALL ATTACHMENT DETAIL - PREFERRED METHOD

A 1 TYPICAL SIDE VIEW DETAIL

INSTALLER NOTE:
INSTALLER RESPONSIBLE TO CHOOSE THE APPROPRIATE FASTENERS PER THE WALL TYPE

ELECTRICAL REQUIREMENTS
Total: T.B.D. Amps
# of 120V, 20A Circuits Req'd T.B.D.
ALL BRANCH CIRCUITS SHALL BE DEDICATED TO SIGNS (INCLUDING GROUND AND NEUTRAL) AND SHALL NOT BE SHARED WITH OTHER LOADS.

REFER TO PAGE 1 FOR ADDITIONAL ELECTRICAL AND INSTALLATION INFORMATION & REQUIREMENTS

INSTALLATION OF THIS SIGN SHALL CONFORM TO ARTICLE 600 OF THE NEC, UL 48 AND OR OTHER APPLICABLE LOCAL CODES, INCLUDING THE PROPER GROUNDING AND BONDING OF THE SIGN.

THE LOCATION OF THE DISCONNECT SWITCH, AFTER INSTALLATION SHALL COMPLY WITH ARTICLE 600.6(A) OF THE NEC.

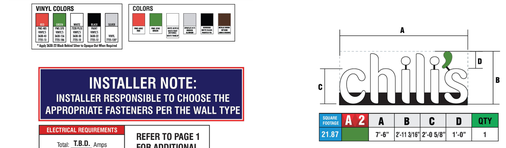

SQUARE FOOTAGE	A 2	A	B	C	D	QTY
21.87		7'-6"	2'-11 3/16"	2'-0 5/8"	1'-0"	1

A 2 PCL "Chili's" Word-Mark with Raceway

CHILI'S WORD-MARK TO BE PLEX-FACE, ALUMINUM CHANNEL LETTER CONSTR.
ILLUMINATED W/ CHILI'S WHITE JT LED'S.
LETTERS TO HAVE WHITE ACRYLIC FACES ("APOSTROPHE" TO BE OVERLAID W/ 3630-156 VIVID GREEN VINYL ON 1st SURFACE)
RETURNS ON ALL ELEMENTS TO BE PAINTED BERRIDGE MATTE BLACK.
TRIMCAP RETAINERS ON LETTERS TO BE WHITE.
PAINT TRIMCAP ON "APOSTROPHE" GREEN T/M 3630-156 VIVID GREEN VINYL.
LETTERS MOUNTED ON AN 8 3/8" RACEWAY PAINTED BERRIDGE MATTE BLACK.
USE SEAL-TIGHT CONDUIT FOR ELECTRICAL FROM "I" TO DOTS, AND "S TO APOSTROPHE".
PAINT SEAL-TIGHT BERRIDGE MATTE BLACK.

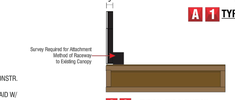

A 2 TYPICAL END ELEVATION
N.T.S.

LED Accent Lighting F

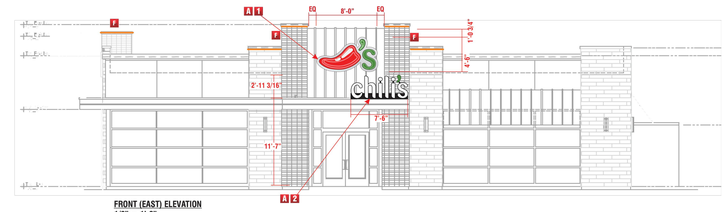

FRONT (EAST) ELEVATION
1/8" = 1'-0"

FEDERAL HEATH SIGN COMPANY
www.federalheath.com
1845 Precinct Line Road, Suite 100, Hurst, Texas 76054
T 817.285.0674 F 817.285.0153
Revisions:
Original Drawing: DM2.7.17.24
R1) Cog. mon. to end; w/ curved cap on base. DM2.7.18.24
R5) Decrease size of base on monument. DM2.7.19.24
Account Rep: Michelle Busing
Project Manager: Mark Morehart
Drawn By: Melanie Gray
Project / Location:
W. 1000 N & Main Street
Tooele, UT 84074
Client Approval/Date:
Landlord Approval/Date:
This original drawing is provided as part of a planned project and is not to be exhibited, copied or reproduced without the written permission of Federal Heath Sign Company LLC or its authorized agent. © FHSC
Colors Depicted In This Rendering May Not Match Actual Material Finishes. Refer To Product Samples For Exact Color Match.
Job Number: 23-85060-10
Date: July 19, 2024
Sheet Number: 2 Of 7
Design Number: 23-85060-10 R10

B 1 Front & Backlit OCL Pepper-S with Self-contained Transformers

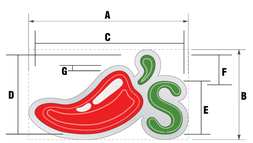

Scale: 3/8" = 1'-0"

SQUARE FOOTAGE	B 1	A	B	C	D	E	F	G	QTY
28	CUSTOM	7'-0"	3'-11 1/2"	6'-6 3/8"	3'-5"	2'-4"	1'-4"	2 3/4"	1

PEPPER S:
FRONT AND BACKLIT "PEPPER S" : 8" OVERALL DEPTH (3"+5") OPEN CHANNEL PEPPER S.
RETURNS INSIDE AND OUTSIDE PAINTED TO MATCH FACE COLORS (RED OR GREEN)
W/ EXPOSED NEON (NO PK HOUSINGS) ON FRONT FACE TO BE:
-CLEAR RED NEON
-#10 GREEN NEON
-3500k WHITE AT HIGHLIGHT.
PAINT 3" ALUMINUM PERIMETER CHANNEL (HIGHLITE) AROUND WHITE AREAS WHITE (INSIDE AND OUT)
*PEPPER S" TO HAVE 3" STANDOFF FROM BKGD. PANEL AND HALO BACKLIGHTED W/ CHILI'S WHITE JT LED's.
*PEPPER S" TO MOUNT ON A .125" FLAT ALUM. PANEL BKGD. CLOUD PAINTED
T/M SPRAYLAT #171 BRUSHED ALUMINUM AND TO BE CLIP- MOUNTED TO WALL.
*PEPPER S" TO HAVE A CLEAR LEXAN BACKER PANEL OVERLAYED W/ 210-314 DUSTED CRYSTAL VINYL.

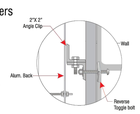

WALL ATTACHMENT DETAIL - PREFERRED METHOD

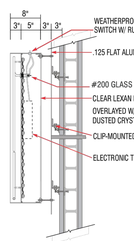

B 1 TYPICAL SIDE VIEW DETAIL

B 2 PCL Letters on Raceway - Canopy Mounted

TO GO:
5" DEEP PLASTIC FACE CHANNEL LETTERS PAINTED WHITE
ON RETURNS, WITH WHITE TRIM CAP RETAINERS. WHITE ACRYLIC FACES.
WARM WHITE LED INTERNAL LIGHTING.
INSTALL LETTERS ON A RACEWAY PAINTED BERRIDGE MATTE BLACK.
MOUNT RACEWAY TO TOP OF CANOPY AT TO GO ENTRANCE.

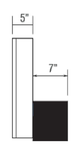

B 2 END VIEW
N.T.S.

VINYL COLORS: WHITE 3630-20 (Opt.) | RED 3630-59 | BLACK 3630-53 | BLUE 3630-57 | GREEN 3630-61 | GOLD 3630-70 | SILVER 3630-77 | * Apply 3630-22 Black Vertical Silver to Opaque Cut When Required
COLORS: WHITE LED | YELLOW GREEN LED | GOLD LEDS | PEPPER GREEN | PEPPER RED | PEPPER YELLOW | PEPPER ORANGE

INSTALLER NOTE:
INSTALLER RESPONSIBLE TO CHOOSE THE APPROPRIATE FASTENERS PER THE WALL TYPE

ELECTRICAL REQUIREMENTS
Total: T.B.D. Amps
# of 120V, 20A Circuits Req'd T.B.D.
ALL BRANCH CIRCUITS SHALL BE DEDICATED TO SIGNS (INCLUDING GROUND AND NEUTRAL) AND SHALL NOT BE SHARED WITH OTHER LOADS.

REFER TO PAGE 1 FOR ADDITIONAL ELECTRICAL AND INSTALLATION INFORMATION & REQUIREMENTS

INSTALLATION OF THIS SIGN SHALL CONFORM TO ARTICLE 600 OF THE NEC, UL 48 AND OR OTHER APPLICABLE LOCAL CODES, INCLUDING THE PROPER GROUNDING AND BONDING OF THE SIGN.

THE LOCATION OF THE DISCONNECT SWITCH, AFTER INSTALLATION SHALL COMPLY WITH ARTICLE 600.6(A) OF THE NEC.

LED Accent Lighting F

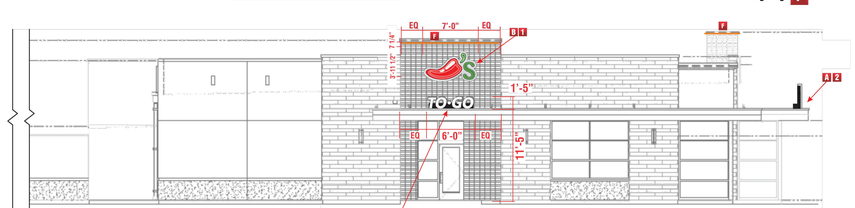

LEFT (SOUTH) ELEVATION
1/8" = 1'-0"

FEDERAL HEATH SIGN COMPANY
www.federalheath.com
1845 Precinct Line Road, Suite 100, Hurst, Texas 76054
T 817.285.0674 F 817.285.0153
Revisions:
Original Drawing: DM2.7.17.24
R1) Cog. mon. to end; w/ curved cap on base. DM2.7.18.24
R5) Decrease size of base on monument. DM2.7.19.24
Account Rep: Michelle Busing
Project Manager: Mark Morehart
Drawn By: Melanie Gray
Project / Location:
W. 1000 N & Main Street
Tooele, UT 84074
Client Approval/Date:
Landlord Approval/Date:
This original drawing is provided as part of a planned project and is not to be exhibited, copied or reproduced without the written permission of Federal Heath Sign Company LLC or its authorized agent. © FHSC
Colors Depicted In This Rendering May Not Match Actual Material Finishes. Refer To Product Samples For Exact Color Match.
Job Number: 23-85060-10
Date: July 19, 2024
Sheet Number: 3 Of 7
Design Number: 23-85060-10 R10

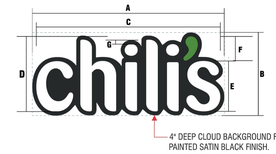

4" DEEP CLOUD BACKGROUND FOR ELECTRICAL PAINTED SATIN BLACK FINISH.

SQUARE FOOTAGE	C	A	B	C	D	E	F	G	QTY
30.85		8'-5"	3'-8"	8'-1"	3'-3 3/4"	2'-2 1/2"	1'-1"	2"	1

C PCL "Chili's" Word-Mark on Cloud Background

CHILI'S WORD-MARK TO BE PLEX-FACE, ALUMINUM CHANNEL LETTER CONSTR.
ILLUMINATED W/CHILI'S JT WHITE LED'S.
LETTERS TO HAVE WHITE ACRYLIC FACES ("APOSTROPHE" TO BE OVERLAYED W/ 3630-156 VIVID GREEN VINYL ON 1ST SURFACE)
RETURNS AND TRIMCAP RETAINERS ON LETTERS TO BE WHITE.
PAINT RETURNS & TRIMCAP ON "APOSTROPHE" GREEN T/M PMS 370C GREEN.

Color Key: SATIN BLACK | PMS 370C SAMPLE | WHITE RETURNS | GREEN 3630-156 VIVID GREEN (ON FACES) | WHITE 3630-20 (OPT.) FACES

ALTERNATE MOUNTING METHODS:

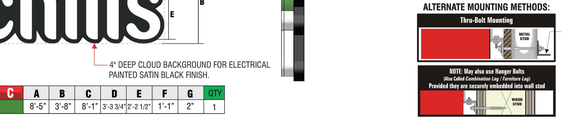

INSTALLATION NOTE:
VERIFY FINAL INSTALLATION REQUIREMENTS PER FIELD CONDITIONS.

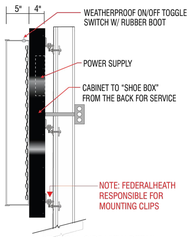

TYPICAL SIDE VIEW DETAIL
N.T.S.

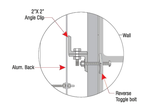

WALL ATTACHMENT DETAIL - PREFERRED METHOD

INSTALLATION OF THIS SIGN SHALL CONFORM TO ARTICLE 600 OF THE NEC, UL 48 AND OR OTHER APPLICABLE LOCAL CODES, INCLUDING THE PROPER GROUNDING AND BONDING OF THE SIGN.

THE LOCATION OF THE DISCONNECT SWITCH, AFTER INSTALLATION SHALL COMPLY WITH ARTICLE 600.6(A) OF THE NEC.

ELECTRICAL REQUIREMENTS
Total: T.B.D. Amps
# of 120V, 20A Circuits Req'd T.B.D.
ALL BRANCH CIRCUITS SHALL BE DEDICATED TO SIGNS (INCLUDING GROUND AND NEUTRAL) AND SHALL NOT BE SHARED WITH OTHER LOADS.

REFER TO PAGE 1 FOR ADDITIONAL ELECTRICAL AND INSTALLATION INFORMATION & REQUIREMENTS

LED Accent Lighting F

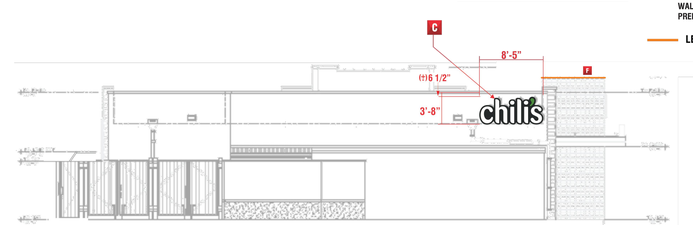

REAR (WEST) ELEVATION
1/8" = 1'-0"

FEDERAL HEATH SIGN COMPANY
www.federalheath.com
1845 Precinct Line Road, Suite 100, Hurst, Texas 76054
T 817.285.0674 F 817.285.0153
Revisions:
Original Drawing: DM2.7.17.24
R1) Cog. mon. to end; w/ curved cap on base. DM2.7.18.24
R5) Decrease size of base on monument. DM2.7.19.24
Account Rep: Michelle Busing
Project Manager: Mark Morehart
Drawn By: Melanie Gray
Project / Location:
W. 1000 N & Main Street
Tooele, UT 84074
Client Approval/Date:
Landlord Approval/Date:
This original drawing is provided as part of a planned project and is not to be exhibited, copied or reproduced without the written permission of Federal Heath Sign Company LLC or its authorized agent. © FHSC
Colors Depicted In This Rendering May Not Match Actual Material Finishes. Refer To Product Samples For Exact Color Match.
Job Number: 23-85060-10
Date: July 19, 2024
Sheet Number: 4 Of 7
Design Number: 23-85060-10 R10

ARCHITECT:
DAVID SCOTT WINDLE, AIA
6201 CAMPUS CIRCLE DRIVE E.
IRVING, TEXAS 75038
TEL: 972.870.1288
WWW.IDSTUDIO4.COM
E-MAIL scottw@idstudio4.com

CORPORATE:
BRINKER RESTAURANT CORPORATION, A VIRGINIA CORPORATION
3000 OLYMPUS BLVD.
DALLAS, TEXAS 75019
972.980.9917
www.brinker.com

THE INFORMATION INCLUDED ON THIS SHEET IS PROVIDED FOR REFERENCE ONLY. NO RESPONSIBILITY FOR ERRORS, OMISSIONS, OR CODE COMPLIANCE WITH INFORMATION PROVIDED ON THIS SHEET IS ASSUMED.

09/23/2024
ISSUE FOR BID
THESE DOCUMENTS ARE FOR BIDDING PURPOSES ONLY. DO NOT USE FOR CONSTRUCTION.

RESTAURANT #CH1679
PROTOTYPE 18.5FS

CHILI'S TOOELE
951 N MAIN STREET
TOOELE, UT 84074

CLIENT: BRINKER RESTAURANT CORP. A VIRGINIA CORPORATION

DATE	DESCRIPTION
6/27/2024	ISSUE FOR PERMIT
9/23/2024	ISSUE FOR BID

DATE	DESCRIPTION

PROJECT NUMBER:
CHI24007

SHEET TITLE:
SIGNAGE SHEET

SHEET NUMBER:
SIGN101

SHOWN FOR REFERENCE ONLY -

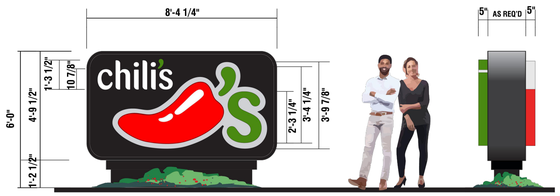

D DOUBLE-FACED MONUMENT SIGN | ONE (1) REQ'D
40 SQ.FT. 3/8" = 1'-0"

END VIEW

STANDARD INSTALL ID TO BE DIRECT PIPE EMBEDMENT INTO CONCRETE FOOTING PER FH ENGINEERING SPECS.

INSTALLER NOTE:
INSTALLER RESPONSIBLE TO CHOOSE THE APPROPRIATE FASTENERS PER THE WALL TYPE

ELECTRICAL REQUIREMENTS	
Total: T.B.D. Amps	REFER TO PAGE 1 FOR ADDITIONAL ELECTRICAL AND INSTALLATION INFORMATION & REQUIREMENTS
# of 120V, 20A Circuits Req'd T.B.D.	
ALL BRANCH CIRCUITS SHALL BE DEDICATED TO SIGNS (INCLUDING GROUND AND NEUTRAL) AND SHALL NOT BE SHARED WITH OTHER LOADS	

INSTALLATION OF THIS SIGN SHALL CONFORM TO ARTICLE 600 OF THE NEC, UL 48 AND OR OTHER APPLICABLE LOCAL CODES, INCLUDING THE PROPER GROUNDING AND BONDING OF THE SIGN.

THE LOCATION OF THE DISCONNECT SWITCH, AFTER INSTALLATION SHALL COMPLY WITH ARTICLE 600.6(A) OF THE NEC.

Installers: Do not take direction from Brinker on-site operations. Please call your contact at Federal Heath Sign Company (800-527-9495) with any questions on signage placement or if you have been asked to modify the signage installation in any way that is different from what is shown on the approved Federal Heath drawing.

VINYL COLORS

PMS 485 SWATCH 7515-C	PMS 376 SWATCH 7515-C	WHITE SWATCH 7515-C	BLACK SWATCH 7515-C	CLEAR
* Apply 3630-21 Black Behind Silver to Opaque Cut Vinyl Required				PANT. 7515-C

COLORS

PMS 485	PMS 376	ANTI-GLARE BLACK (MATTE FINISH)	PANTONE 7515-C	PANTONE 7515-C (SATIN FINISH)	PANTONE 7515-C (GLOSS FINISH)

CABINET
Cabinet constructed of aluminum. All exterior surfaces (faces & filler) to be Satin Black Finish. Silver Cloud Bkgd Behind Pepper-S Painted MP58669 "Sunset Silver".

PEPPER-S
5" Face Channel Fabricated Aluminum Pepper-S w/ 1" Trimcap Retainers and White Acrylic Faces. Overlay Red Chili Pepper on 1st Surface w/ #3630-43 Red vinyl (Highlights to show-thru White). Returns on Pepper to Match PMS-485C Red. w/ Red Trimcap to Match. Overlay *Apostrophe & S* 1st Surface w/ #3630- 156 Green Vinyl. Returns to Match PMS-370C Green, w/ 1" Green Trimcap to Match. Illuminate internally w/ #Chili's White JT LED's.

BASE w/ DECORATIVE CAP
Aluminum Base Over Steel Support Pipe. Paint Satin Black finish.
***NOTE: Decorative cap on base is die-cut to follow the curve of the oval cabinet.**

ELECTRICAL REQUIREMENTS
Total: T.B.D. Amps
(__) 120V 20A Circuit Required.
ALL BRANCH CIRCUITS SHALL BE DEDICATED TO SIGNS (INCLUDING GROUND AND NEUTRAL) AND SHALL NOT BE SHARED WITH OTHER LOADS.

MANUFACTURING WILL PROVIDE A STUB PIPE WITH SIGN CABINETS ONLY IF O.A.H. (CABINET & STUB PIPE) DOES NOT EXCEED 9'-7" MAXIMUM SHIPPING HEIGHT RESTRICTIONS.

ALL SUPPORTING STEEL, INCLUDING STUB PIPE IF IT NOT INCLUDED WITH CABINET, TO BE SHIPPED TO INSTALLATION SITE BY AN OUTSIDE SUPPLIER OR BY THE INSTALLATION CONTRACTOR, AS DETERMINED BY PROJECT MANAGEMENT.

ALL SUPPORTING STEEL TO BE SHIPPED TO INSTALLATION SITE BY AN OUTSIDE SUPPLIER OR INSTALLATION CONTRACTOR AS DETERMINED BY PROJECT MANAGEMENT.

FEDERAL HEATH SIGN COMPANY
www.federalheath.com
18445 Pinstriped Line Road, Suite 100, Hurst, Texas 76054
T: 817.685.8570 F: 817.685.8723

Revisions:
Original Drawing: (MG) 7.17.24
R1) Cog more, tie end, w/ curved cap on base. (MG) 7.18.24
R9) Decrease size of base on monument. (MG) 7.19.24

Account Rep: Michelle Busing
Project Manager: Mark Morehart
Drawn By: Melanie Gray
Project / Location:
W. 1000 N & Main Street
Tooele, UT 84074

Underwriters Laboratories Inc. — ELECTRICAL TO USE U.L. LISTED AND LABELED MATERIALS AND TO BE INSTALLED ACC. W.N.E. STANDARDS

ALL ELECTRICAL SIGNS ARE TO COMPLY WITH U.L. 48 AND OR OTHER APPLICABLE LOCAL CODES, INCLUDING THE PROPER GROUNDING AND BONDING OF ALL SIGNS.

Client Approval/Date:
Landlord Approval/Date:

This original drawing is provided as part of a planned project and is not to be exhibited, copied or reproduced without the written permission of Federal Heath Sign Company LLC or its authorized agent. © FHSC

Colors Depicted In This Rendering May Not Match Actual Material Finishes. Refer To Product Samples For Exact Color Match.

Job Number: 23-85060-10
Date: July 19, 2024
Sheet Number: 5 Of 7
Design Number: 23-85060-10 R10

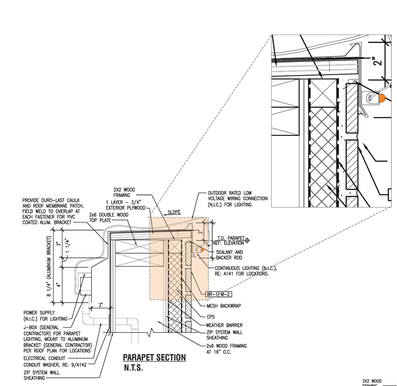

PARAPET SECTION
N.T.S.

NEW PLACEMENT OF L.E.D. TO BE ON BOTTOM OF METAL CAP DRIP EDGE.

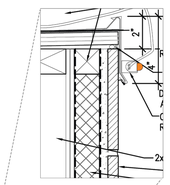

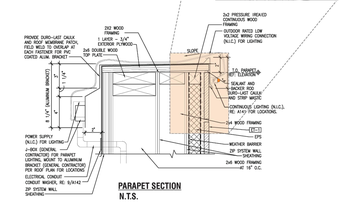

PARAPET SECTION
N.T.S.

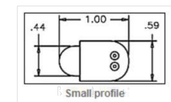

Installers: Do not take direction from Brinker on-site operations. Please call your contact at Federal Heath Sign Company (800-527-9495) with any questions on signage placement or if you have been asked to modify the signage installation in any way that is different from what is shown on the approved Federal Heath drawing.

INSTALLER NOTE:
INSTALLER RESPONSIBLE TO CHOOSE THE APPROPRIATE FASTENERS PER THE WALL TYPE

ELECTRICAL REQUIREMENTS	
Total: T.B.D. Amps	REFER TO PAGE 1 FOR ADDITIONAL ELECTRICAL AND INSTALLATION INFORMATION & REQUIREMENTS
# of 120V, 20A Circuits Req'd T.B.D.	
ALL BRANCH CIRCUITS SHALL BE DEDICATED TO SIGNS (INCLUDING GROUND AND NEUTRAL) AND SHALL NOT BE SHARED WITH OTHER LOADS	

INSTALLATION OF THIS SIGN SHALL CONFORM TO ARTICLE 600 OF THE NEC, UL 48 AND OR OTHER APPLICABLE LOCAL CODES, INCLUDING THE PROPER GROUNDING AND BONDING OF THE SIGN. THE LOCATION OF THE DISCONNECT SWITCH, AFTER INSTALLATION SHALL COMPLY WITH ARTICLE 600.6(A) OF THE NEC.

F COLORLINE LED SPECIFICATION
EXACT LENGTH OF LED TO BE DETERMINED - SURVEY REQ'D
(SEE ROOF PLAN & INDIVIDUAL BUILDING ELEVATIONS.)

* L.E.D. Border is Orange ColorLINE.

FEDERAL HEATH SIGN COMPANY
www.federalheath.com
18445 Pinstriped Line Road, Suite 100, Hurst, Texas 76054
T: 817.685.8570 F: 817.685.8723

Revisions:
Original Drawing: (MG) 7.17.24
R1) Cog more, tie end, w/ curved cap on base. (MG) 7.18.24
R9) Decrease size of base on monument. (MG) 7.19.24

Account Rep: Michelle Busing
Project Manager: Mark Morehart
Drawn By: Melanie Gray
Project / Location:
W. 1000 N & Main Street
Tooele, UT 84074

Underwriters Laboratories Inc. — ELECTRICAL TO USE U.L. LISTED AND LABELED MATERIALS AND TO BE INSTALLED ACC. W.N.E. STANDARDS

ALL ELECTRICAL SIGNS ARE TO COMPLY WITH U.L. 48 AND OR OTHER APPLICABLE LOCAL CODES, INCLUDING THE PROPER GROUNDING AND BONDING OF ALL SIGNS.

Client Approval/Date:
Landlord Approval/Date:

This original drawing is provided as part of a planned project and is not to be exhibited, copied or reproduced without the written permission of Federal Heath Sign Company LLC or its authorized agent. © FHSC

Colors Depicted In This Rendering May Not Match Actual Material Finishes. Refer To Product Samples For Exact Color Match.

Job Number: 23-85060-10
Date: July 19, 2024
Sheet Number: 6 Of 7
Design Number: 23-85060-10 R10

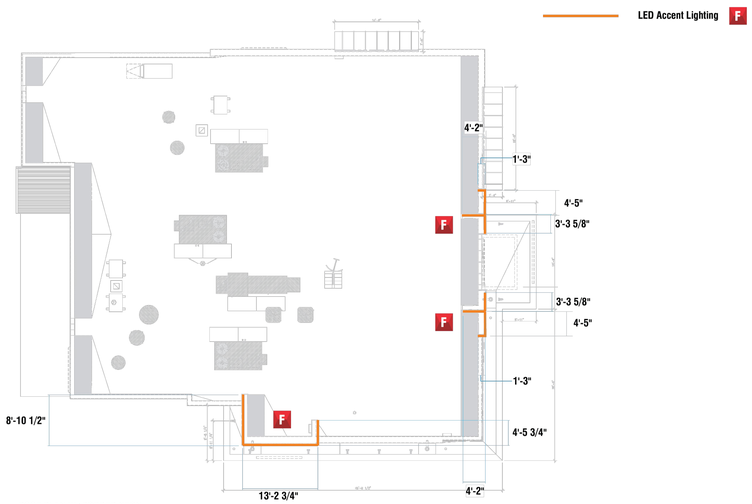

ROOF PLAN W/ BORDER NEON
APPROXIMATE SCALE: 3/32"=1'

FEDERAL HEATH SIGN COMPANY
www.federalheath.com
18445 Pinstriped Line Road, Suite 100, Hurst, Texas 76054
T: 817.685.8570 F: 817.685.8723

Revisions:
Original Drawing: (MG) 7.17.24
R1) Cog more, tie end, w/ curved cap on base. (MG) 7.18.24
R9) Decrease size of base on monument. (MG) 7.19.24

Account Rep: Michelle Busing
Project Manager: Mark Morehart
Drawn By: Melanie Gray
Project / Location:
W. 1000 N & Main Street
Tooele, UT 84074

Underwriters Laboratories Inc. — ELECTRICAL TO USE U.L. LISTED AND LABELED MATERIALS AND TO BE INSTALLED ACC. W.N.E. STANDARDS

ALL ELECTRICAL SIGNS ARE TO COMPLY WITH U.L. 48 AND OR OTHER APPLICABLE LOCAL CODES, INCLUDING THE PROPER GROUNDING AND BONDING OF ALL SIGNS.

Client Approval/Date:
Landlord Approval/Date:

This original drawing is provided as part of a planned project and is not to be exhibited, copied or reproduced without the written permission of Federal Heath Sign Company LLC or its authorized agent. © FHSC

Colors Depicted In This Rendering May Not Match Actual Material Finishes. Refer To Product Samples For Exact Color Match.

Job Number: 23-85060-10
Date: July 19, 2024
Sheet Number: 7 Of 7
Design Number: 23-85060-10 R10

ARCHITECT:
DAVID SCOTT WINDLE, AIA
6201 CAMPUS CIRCLE DRIVE E.
IRVING, TEXAS 75038
TEL: 972.870.1288
WWW.IDSTUDIO4.COM
E-MAIL scottw@idstudio4.com

CORPORATE:
BRINKER RESTAURANT CORPORATION, A VIRGINIA CORPORATION
3000 OLYMPUS BLVD.
DALLAS, TEXAS 75019
972.980.9917
www.brinker.com

THE INFORMATION INCLUDED ON THIS SHEET IS PROVIDED FOR REFERENCE ONLY. NO RESPONSIBILITY FOR ERRORS, OMISSIONS, OR CODE COMPLIANCE WITH INFORMATION PROVIDED ON THIS SHEET IS ASSUMED.

09/23/2024
ISSUE FOR BID
THESE DOCUMENTS ARE FOR BIDDING PURPOSES ONLY. DO NOT USE FOR CONSTRUCTION.

RESTAURANT #CH1679
PROTOTYPE 18.5FS

CHILI'S TOOELE
951 N MAIN STREET
TOOELE, UT 84074

CLIENT: BRINKER RESTAURANT CORP. A VIRGINIA CORPORATION

DATE	DESCRIPTION
6/27/2024	ISSUE FOR PERMIT
9/23/2024	ISSUE FOR BID

△	DATE	DESCRIPTION

PROJECT NUMBER:
CHI24007

SHEET TITLE:
SIGNAGE SHEET

SHEET NUMBER:
SIGN102